GREE
Change for life

Owner's Manual

Original Instructions

Commercial Air Conditioners

Multi Variable Air Conditioners
One-way Cassette Type Indoor Unit

Models:

GMV-ND07TD/A-T(U)

GMV-ND09TD/A-T(U)

GMV-ND12TD/A-T(U)

Thank you for choosing commercial air conditioners. Please read this Owner's Manual carefully before operation and retain it for future reference.

If you have lost the Owner's Manual, please contact the local agent or visit www.gree.com or send an email to global@cn.gree.com for the electronic version.

GREE ELECTRIC APPLIANCES, INC. OF ZHUHAI

Preface

For correct installation and operation, please read all instructions carefully. Before reading the instructions, please be aware of the following items:

⚠ DANGER	This is the safety alert symbol. It is used to alert you to potential personal injury hazards. Obey all safety messages that follow this symbol to avoid possibleinjury or death.
⚠WARNING	This mark indicates procedures which, if improperly performed, might lead to the death or serious injury of the user.
⚠CAUTION	This mark indicates procedures which, if improperly performed, might possibly result in personal harm to the user, or damage to property.
NOTICE	NOTICE is used to address practices not related to personal injury.

⚠WARNING	
(1)	The design standard of multi VRF system conforms to related standard of sales countries.
(2)	To ensure safety when operating this system, please strictly follow the instructions in this manual.
(3)	The total capacity of running indoor units must not exceed that of the outdoor units. Otherwise, the cooling (heating) effect of each IDU would be poor.
(4)	Make sure that this manual is kept by direct operators and maintainers.
(5)	If the product needs to be installed, moved or maintained, please contact our designated dealer or local service center for professional support. Users should not disassemble or maintain the unit by themselves, otherwise it may cause relative damage, and our company will bear no responsibilities.
(6)	All the illustrations and information in the instruction manual are only for reference. In order to make the product better, we will continuously conduct improvement and innovation. If there is adjustment in the product, please subject to actual product.
(7)	Under the standby status, the unit will consume a little power for ensuring reliability of the complete unit, maintaining normal communication and preheating refrigerant. When the unit won't be used for a long time, please cut off the power of the complete unit. However, please preheat it when operating the unit next time.

This appliance can be used by children aged from 8 years and above and persons with reduced physical, sensory or mental capabilities or lack of experience and knowledge if they have been given supervision or instruction concerning use of the appliance in a safe way and understand the hazards involved. Children shall not play with the appliance. Cleaning and user maintenance shall not be made by children without supervision.

DISPOSAL: Do not dispose this product as unsorted municipal waste. Collection of such waste separately for special treatment is necessary.

Exception Clauses	
Manufacturer will bear no responsibilities when personal injury or property loss is caused by the following reasons:	
(1)	Damage the product due to improper use or misuse of the product;
(2)	Alter, change, maintain or use the product with other equipment without abiding by the instruction manual of manufacturer;
(3)	After verification, the defect of product is directly caused by corrosive gas;
(4)	After verification, defects are due to improper operation during transportation of product;
(5)	Operate, repair, maintain the unit without abiding by instruction manual or related regulations;
(6)	After verification, the problem or dispute is caused by the quality specification or performance of parts and components that produced by other manufacturers;
(7)	The damage is caused by natural calamities, bad using environment or force majeure.

Contents

1 Safety Precautions

⚠ WARNING
(1) This product can't be installed at corrosive, inflammable or explosive environment or the place with special requirements, such as kitchen. Otherwise, it will affect the normal operation or shorten the service life of the unit, or even cause fire hazard or serious injury. As for above special places, please adopt special air conditioner with anti-corrosive or anti-explosion function.
(2) Follow this instruction to complete the installation work. Please carefully read this manual before unit startup and service.
(3) Wire size of power cord should be large enough. The damaged power cord and connection wire should be replaced by exclusive cable.
(4) After connecting the power cord, please fix the electric box cover properly in order to avoid accident.
(5) Never fail to comply with the nitrogen charge requirements. Charge nitrogen when welding pipes.
(6) Never short-circuit or cancel the pressure switch to prevent unit damage.
(7) Please firstly connect the wired controller before energization, otherwise wired controller can not be used.
(8) Before using the unit, please check if the piping and wiring are correct to avoid water leakage, refrigerant leakage, electric shock, or fire etc.
(9) Do not insert fingers or objects into air outlet/inlet grille.
(10) Open the door and window and keep good ventilation in the room to avoid oxygen deficit when the gas/oil supplied heating equipment is used.
(11) Never start up or shut off the air conditioner by means of directly plug or unplug the power cord.
(12) Turn off the unit after it runs at least five minutes; otherwise it will influence oil return of the compressor.
(13) Do not allow children operate this unit.
(14) Do not operate this unit with wet hands.
(15) Turn off the unit or cut off the power supply before cleaning the unit, otherwise electric shock or injury may happen.
(16) Never spray or flush water towards unit, otherwise malfunction or electric shock may happen.
(17) Do not expose the unit to the moist or corrosive circumstances.
(18) Under cooling mode, please don't set the room temperature too low and keep the temperature difference between indoor and outdoor unit within 5℃ (41℉).
(19) User is not allowed to repair the unit. Fault service may cause electric shock or fire accidents. Please contact our designated dealer or local service center for help.
(20) Before installation, please check if the power supply is in accordance with the requirements specified on the nameplate. And also take care of the power safety.
(21) Installation should be conducted by dealer or qualified personnel. Please do not attempt to install the unit by yourself. Improper handling may result in water leakage, electric shock or fire disaster etc.
(22) Be sure to use the exclusive accessory and part to prevent the water leakage, electric shock and fire accidents.
(23) Make sure the unit can be earthed properly and soundly after plugging into the socket so as to avoid electric shock. Please do not connect the ground wire to gas pipe, water pipe, lightning rod or telephone line.
(24) Electrify the unit 8 hours before operation. Please switch on for 8 hours before operation. Do not cut off the power when 24 hours short-time halting (to protect the compressor).
(25) If refrigerant leakage happens during installation, please ventilate immediately. Poisonous gas will emerge if the refrigerant gas meets fire.
(26) Volatile liquid, such as diluent or gas will damage the unit appearance. Only use soft cloth with a little neutral detergent to clean the outer casing of unit.
(27) If anything abnormal happens (such as burning smell), please power off the unit and cut off the main power supply, and then immediately contact our designated dealer or local service center. If abnormality keeps going, the unit might be damaged and lead to electric shock or fire.

If the product needs to be installed, moved or maintained, please contact our designated dealer or local service center for professional support, otherwise our company would bear no legal reliability for the related damages arising therefrom.

2 Product Introduction

2.1 Names of Key Components

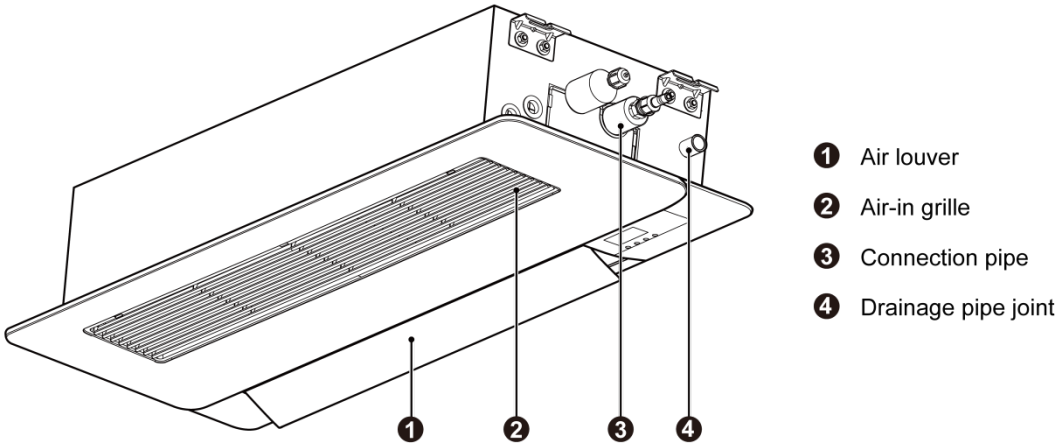

Fig.2.1.1

2.2 Rated Working Condition

-	Indoor Side Condition		Outdoor Side Condition	
	Dry Bulb Temp ℃(˚F)	Wet Bulb Temp ℃(˚F)	Dry Bulb Temp ℃(˚F)	Wet Bulb Temp ℃(˚F)
Rated Cooling	26.7(80.0)	19.4(67.0)	35(95.0)	24(75.2)
Rated Heating	21.1(70.0)	15.6(60.0)	7(44.6)	6(42.8)

3 Preparations for Installation

NOTICE! Product graphics are only for reference. Please refer to actual products. Unspecified measure unit is mm(inch).

3.1 Standard Fittings

Please use the supplied standard fittings listed below as instructed.

No.	Name	Appearance	Q'ty	Usage
1	Wireless controller	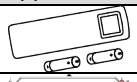	1	To control the indoor unit
2	Paper pattern for installation	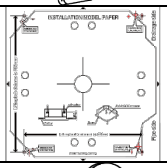	1	Locate the drill hole on ceiling
3	Tapping screw with washer	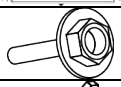	4	Fix paper pattern
4	Washer fixing plate		4	Prevent the washer from falling off
5	Drain Hose Assembly		1	To connect with the hard PVC drain pipe
6	Special Nut		2	To be used for connecting the refrigerant pipe

No.	Name	Appearance	Q'ty	Usage
7	M10 Washer		10	To be used together with the hanger bolt for installing the unit.
8	Self-tapping screw		10	For mounting panels
9	Insulation		1	To insulate the gas pipe
10	Insulation		1	To insulate the liquid pipe
11	Sponge		1	To insulate the drain pipe
12	Fastener		4	To fasten the sponge
13	Remote controller holder		1	Used for holding the remote controller
14	Tapping screw		2	Used for fixing the remote controller holder

3.2 Installation Position Selection

(1) The appliance shall not be installed in the laundry.

(2) The location should be able to withstand the weight of unit.

(3) The water can be drained conveniently from drainage pipe.

(4) There should be no obstruction near air inlet and air outlet.

(5) Follow the installation distance required in the Fig.3.2.1 below to ensure sufficient space for maintenance.

(6) The installation location should be far from heat sources, flammable or explosive gas, or smog spread in the air.

(7) The indoor unit, outdoor unit, power cord and connection electricity wire should be at least 1m from television and radio in order to prevent interference and noise (Even though 1m distance is ensure, there may be noise if the electric wave is too strong.).

(8) This indoor unit may be installed on ceilings up to 2.5m(98-3/8inch) to avoid accidental touching.

Unit: mm(inch)

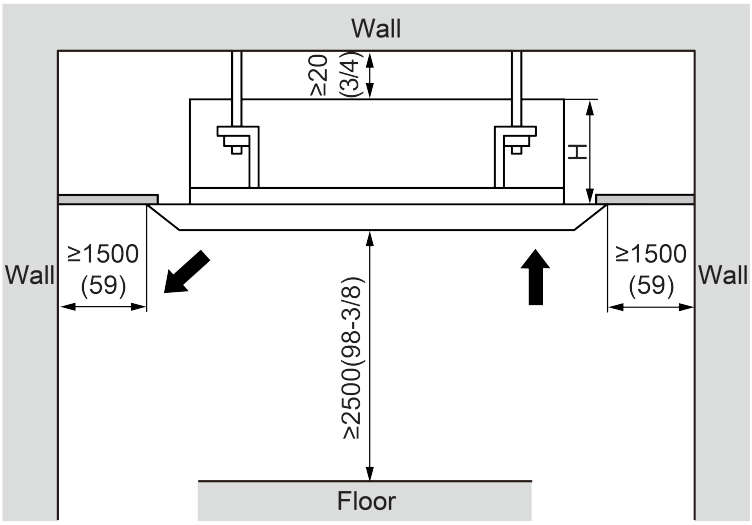

Fig.3.2.1

Model	H
GMV-ND07TD/A-T(U)	207(8 1/8)
GMV-ND09TD/A-T(U)	207(8 1/8)
GMV-ND12TD/A-T(U)	207(8 1/8)

NOTICE	
(1)	The unit shall be installed in accordance with national standards or local regulations.
(2)	Only qualified personnel can carry out installation work, please contact our designated dealer or local service center before installation.
(3)	Make sure all the installation work completed before energizing.
(4)	When installed in the narrow room, corresponding measures must be taken to prevent the concentration of refrigerant from exceeding the limit value when the refrigerant is leaking, which might lead to anoxia or asphyxia.

3.3 Requirements for Communication Line

NOTICE! If air conditioner used under strong electronic-magnetic interference circumstance, STP (shielded twisted pair) communication cable must be adopted.

3.3.1 Select Communication Line for Indoor Unit and Wired Controller

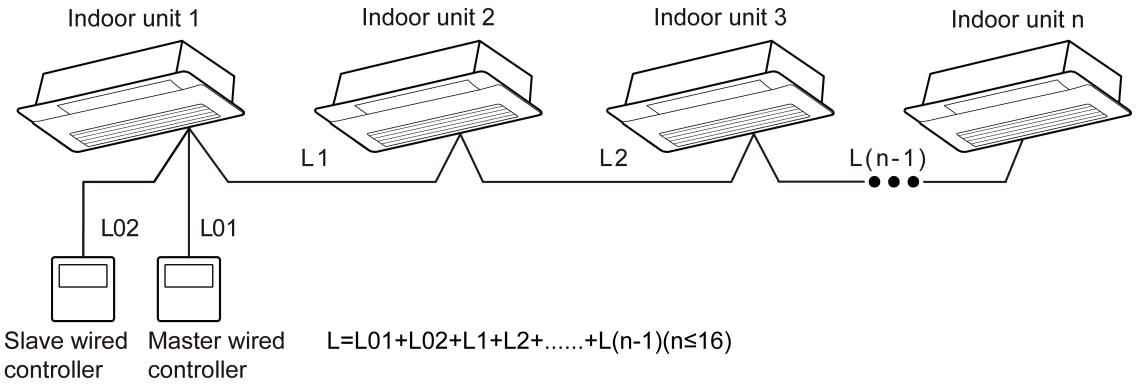

Fig.3.3.1

Material type	Total length of communication line between indoor unit and wired controller L (m/ft.)	Wire size (AWG)	Remarks
Light/Ordinary polyvinyl chloride sheathed cord.	L≤250m (L≤820ft.)	2×AWG18~2×AWG 16	1. Total length of communication line can't exceed 250m (820ft.). 2. The cord shall be Circular cord (the cores shall be twisted together). 3. If unit is installed in places with intense magnetic field or strong interference, it is necessary to use shielded wire.

3.3.2 Selection of Communication Wire between Indoor Unit and Indoor Unit (or Outdoor Unit)

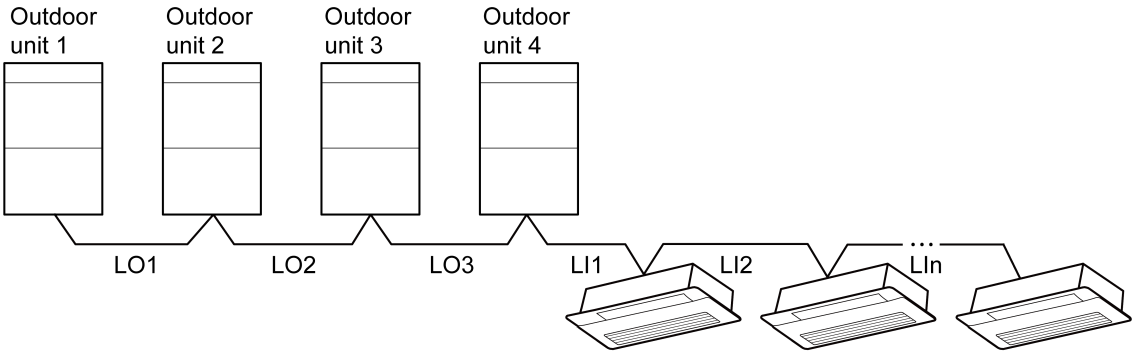

Fig.3.3.2

Material Type	Total Length L (m/ft.) of Communication Cable between Indoor Unit and Indoor (Outdoor) Unit	Wire size (AWG)	Remarks
Light/Ordinary polyvinyl chloride sheathed cord.	L≤1000m (L≤3280ft.)	≥2×AWG18	1. If the wire diameter is enlarged to 2×AWG16, the total communication line length can reach 1500m (4920ft.). 2. The cord shall be Circular cord (the cores shall be twisted together). 3. If unit is installed in places with intense magnetic field or strong interference, it is necessary to use shielded wire.

3.4 Wiring Requirements

Power Cord Size and Air Switch Capacity

Model	Power Supply	MCA(A)	MOP(A)
GMV-ND07TD/A-T(U)	208/230V-1ph-60Hz	0.375	15
GMV-ND09TD/A-T(U)		0.375	15
GMV-ND12TD/A-T(U)		0.375	15

NOTICE	
(1)	An all-pole disconnection switch having a contact separation of at least 3mm(1/8 inch) in all poles should be connected in fixed wiring.
(2)	The circuit breaker and power cord specification in above sheet is based on max power(max current) of the unit.
(3)	The power cord specification in above sheet is based on ambient temperature of 40℃(104℉).
(4)	The circuit breaker specification in above sheet is based on ambient temperature of 40℃(104℉). If the working condition is different, please adjust it according to the specification sheet of circuit breaker.

4 Installation Instructions

4.1 Installation of Indoor Unit

4.1.1 Ceiling Opening Dimension and Suspension Bolt Position.

Unit: mm(inch)

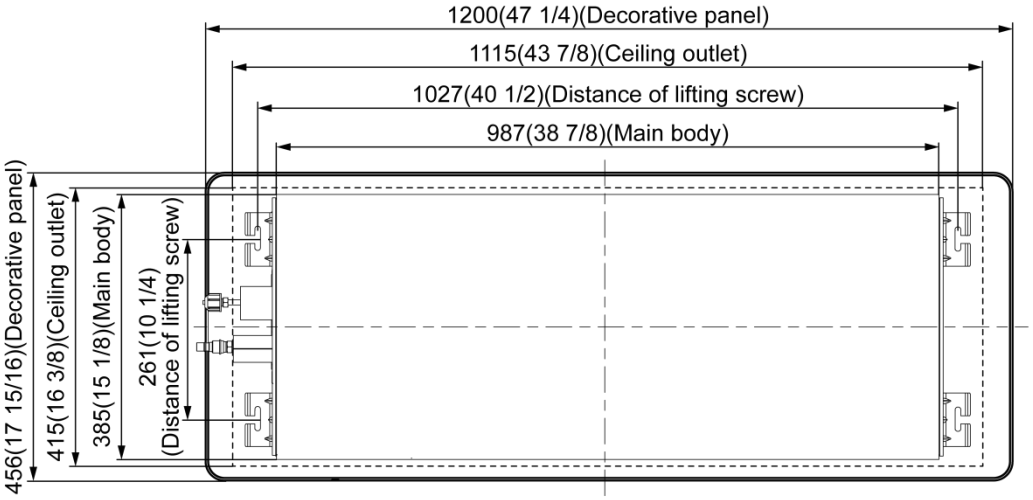

Fig.4.1.1

4.1.2 Suspend the Indoor Unit

(1) Drill bolt holes and install bolts

1) Stick the reference cardboard on the installation position; drill 4 holes according to the hole site on the cardboard as shown in Fig.4.1.2; diameter of drilling hole is according to the diameter of expansion bolt and the depth is 60-70mm (2-3/8~2-3/4 inch), as shown in Fig.4.1.3.

Unit: mm(inch)

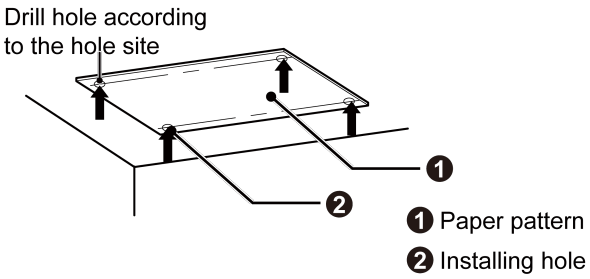

Fig.4.1.2

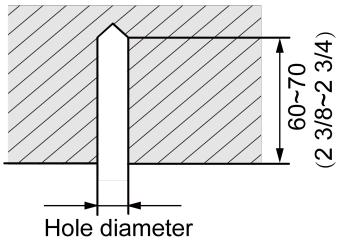

Fig.4.1.3

2) Insert the M10 expansion bolt into the hole and then knock the nail into the bolt, as shown in Fig.4.1.4.

NOTICE! The length of bolt depends on the installation height of the unit; bolts are field supplied.

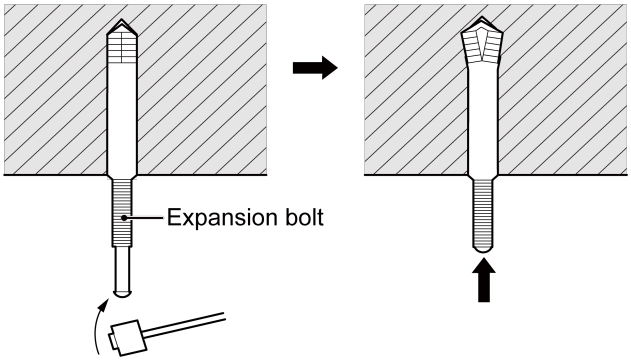

Fig.4.1.4

(2) Install the indoor unit temporarily

Assemble suspension bolt on the expansion bolt, attach the hanger bracket to the suspension bolt. Be sure to fix it securely by using a nut and washer from upper and lower sides of the hanger bracket. The washer fixing plate will prevent the washer from falling.

(3) The usage of paper pattern

Refer to paper pattern of installation for ceiling opening dimension. The center of ceiling opening is indicated on the paper pattern. Fix the paper pattern to the unit with 4 screws and fix the corners of the waterspout at the drainage pipe by screws.

(4) Adjust the unit to the right position.

(5) Check the level of the unit

The indoor unit is equipped with build-in water pump and float switch, verify the levelness of 4 directions by level gauge or vinyl tube (filled with water) respectively.

(6) Remove the washer locating plate and then tighten the nut on it.

(7) Remove the paper pattern.

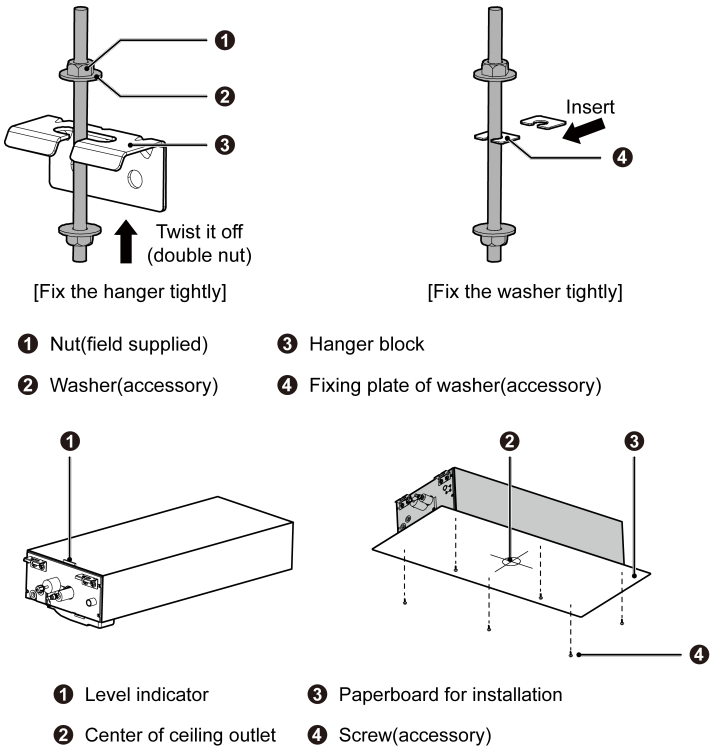

Fig.4.1.5

4.2 Refrigerant Pipe Connection

(1) Aim the flaring port of copper pipe at the center of screwed joint and then tighten the flaring nut with hand as shown in Fig.4.2.1.

(2) Tighten the flaring nut with torque wrench.

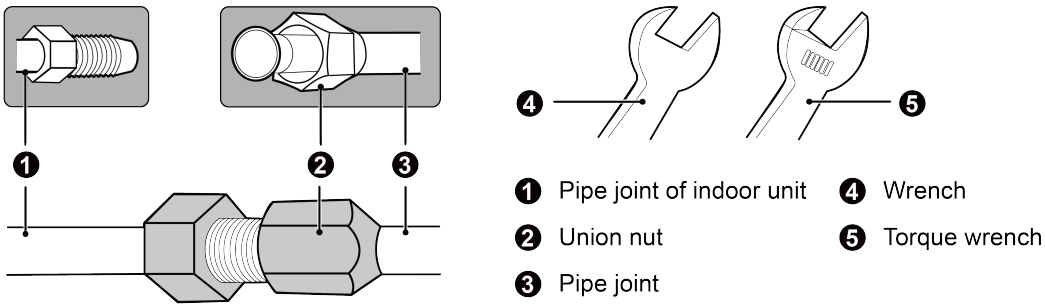

Fig.4.2.1

Pipe diameter (mm(inch))	Torque(N•m)
Φ6.35(1/4)	15~30
Φ9.52(3/8)	35~40
Φ12.7(1/2)	45~50
Φ15.9(5/8)	60~65

(3) Use pipe bend when bending the pipe and the bending angle should not be too small.

(4) Wrap the connection pipe and joint with sponge and then tie them firmly with tape.

(5) For the model which the diameter of gas pipe is≥15.9mm(5/8 inch), we recommend choosing the bellows to avoid any problems.

4.3 Drainage Pipe Installation and Drainage System Testing

4.3.1 Notice for Installation of Drain Pipe

(1) It is not allowed to connect the condensate drain pipe into waste pipe or other pipelines which are likely to produce corrosive or peculiar smell to prevent the smell from entering indoors or corrupt the unit.

(2) It is not allowed to connect the condensate drain pipe into rain pipe to prevent rain water from pouring in and cause property loss or personal injury.

(3) Condensate drain pipe should be connected into special drain system for air conditioner.

(4) The drainage pipe should be short and the gradient downwards should be at least 1%~2% in order to drain condensation water smoothly.

(5) The diameter of drainage hose should be bigger or equal to the diameter of drainage pipe joint.

(6) Install drainage pipe according to the following Fig.4.3.1. and arrange insulation to the drainage pipe. Improper installation may lead to water leakage and damp the furniture and other things in the room.

(7) You can buy normal hard PVC pipe used as the drainage pipe. During connection, insert the end of PVC pipe into the drainage hole and then tighten it with drainage hole and wire binder. Can’t connect the drainage hole and drainage hole with glue.

(8) When the drainage pipelines are used for several units, the position of pipeline should be about 100mm (4 inch) lower than the drainage port of each unit. In this case, thicker pipes should be applied.

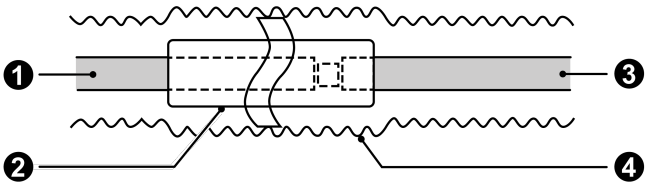

❶ Additional drainage pipe
❸ Drainage pipe of indoor unit
❷ Insulating pipe
❹ Insulating tape

Fig.4.3.1

4.3.2 Drainage Pipe Installation

(1) Drainage pipe should have the same diameter or larger diameter than the connecting pipes (PVC pipe, outside diameter 25mm (1 inch), thickness≥1.5mm (1/16 inch)).

(2) Keep drainage pipe short and sloping downwards at a gradient of at least 1% for preventing forming air bubbles.

(3) If the gradient of drainage pipe could not meet the installation requirements, raising pipe should be applied.

(4) Insert the drainage hose into drain socket, tighten the metal clamp securely.

(5) Warp the sealing pad over drain hose and metal clamp for heat insulation.

(6) Make sure to perform insulation work for all drainage piping in order to prevent any possible water drop due to dew condensation.

(7) Apply the suitable diameter for converging drainage pipe according to the operating capacity of the unit.

Unit: mm(inch)

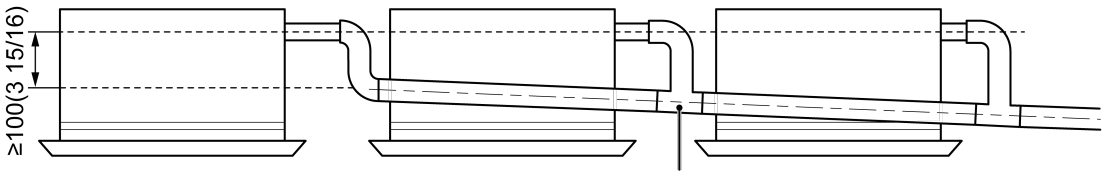

Drainage pipes assembled by T-shaped joints

Fig.4.3.2

(8) The installation height of raising pipe for drainage should be lower than B. The gradient from raising pipe towards drainage direction should be at least 1%~2%. If the raising pipe is vetical with the unit, the raising height should be less than C.

Unit: mm(inch)

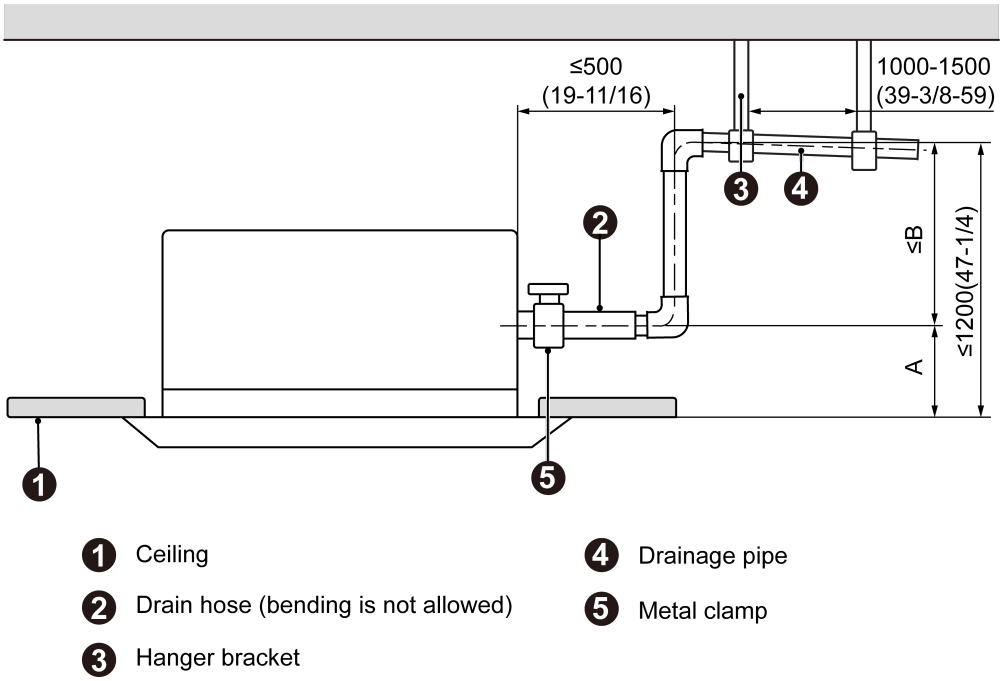

Fig.4.3.3

Model	A (mm/inch)	B(mm/inch)	C(mm/inch)
GMV-ND07TD/A-T(U) GMV-ND09TD/A-T(U) GMV-ND12TD/A-T(U)	100(3-15/16)	1100(43-5/16)	1050(41-5/16)

(9) Drain pipes should have a downward slope of at least 1%~2%, in order to prevent pipes from sagging, install hanger bracket at intervals of 1000~1500mm (39-3/8~59 inch).

Unit: mm(inch)

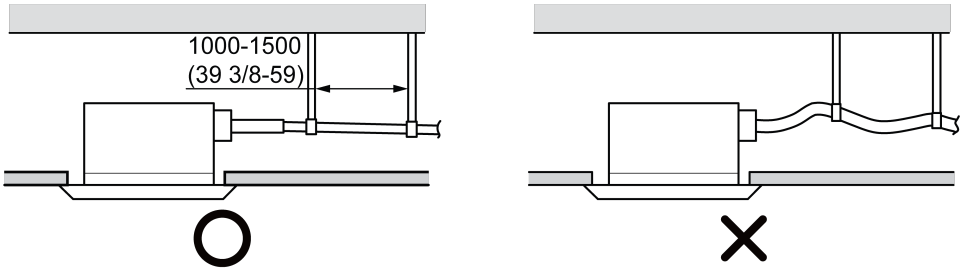

Fig.4.3.4

4.3.3 Test of Drainage System

(1) Please test drainage system after electric work is finished.

Inject approximately 1L purified water to drain pan from air vent, ensure that not to splash the water over the electrical components (e.g. water pump. etc.).

1) Inject approximately 1L purified water to drain pan from air vent, ensure that not to splash the water over the electrical components (e.g. water pump etc.).

2) In case of commissioning finished, please energize the IDUs and switch to cooling or dry mode, meanwhile, the water pump operates, you can check the draining through the drain socket.

3) If communication wire is not connected, communication malfunction “C0” will occur after 60s of energizing. In this case, the water pump operates automatically. Check if the water pump drains normally through drainage port. The water pump will stop automatically after running for 10mins.

(2) During the test, please carefully check the drainage joint, make sure no any leakage occur.

(3) It’s strongly recommend to do the drain test before ceiling decoration.

Unit:mm(inch)

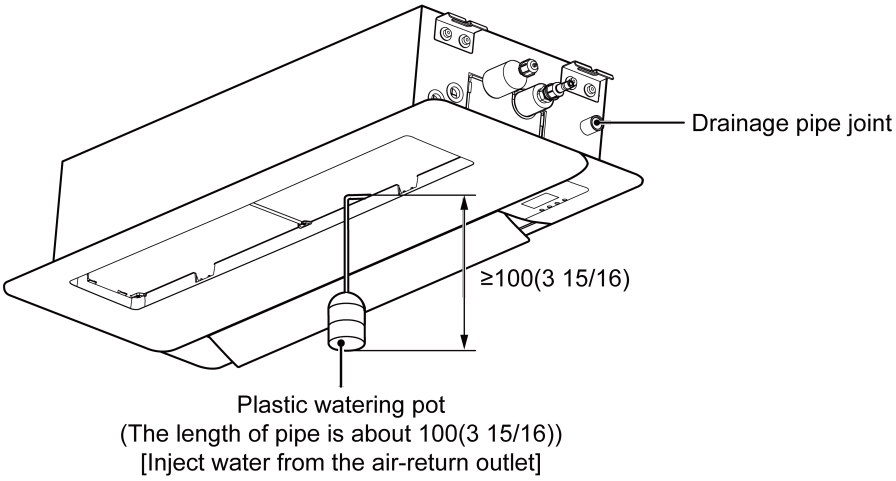

Fig.4.3.5

4.4 Panel Installation

4.4.1 Notices for Installation

(1) Improper decorative panel installation could cause the following problems.

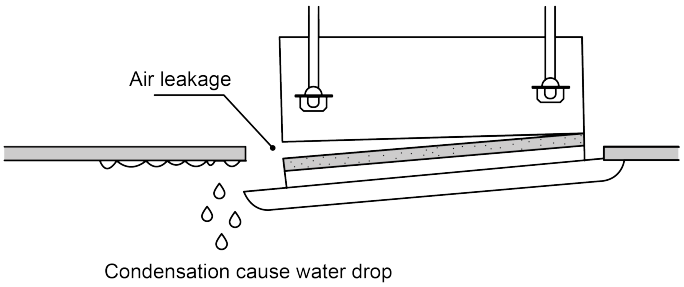

Fig.4.4.1

(2) Ensure that its clearance-free between decoration panel and ceiling board after installation, if not, please adjust the body position.

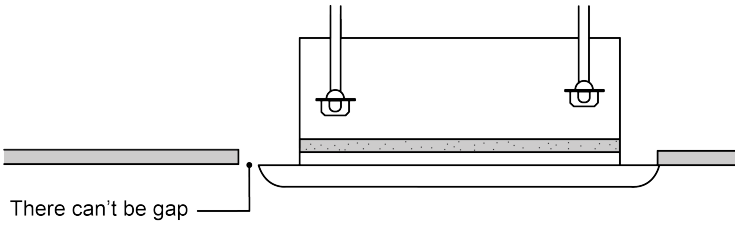

Fig.4.4.2

(3) Connect the decoration panel terminals (Female) to body terminals (male) as shown in Fig.4.4.3.

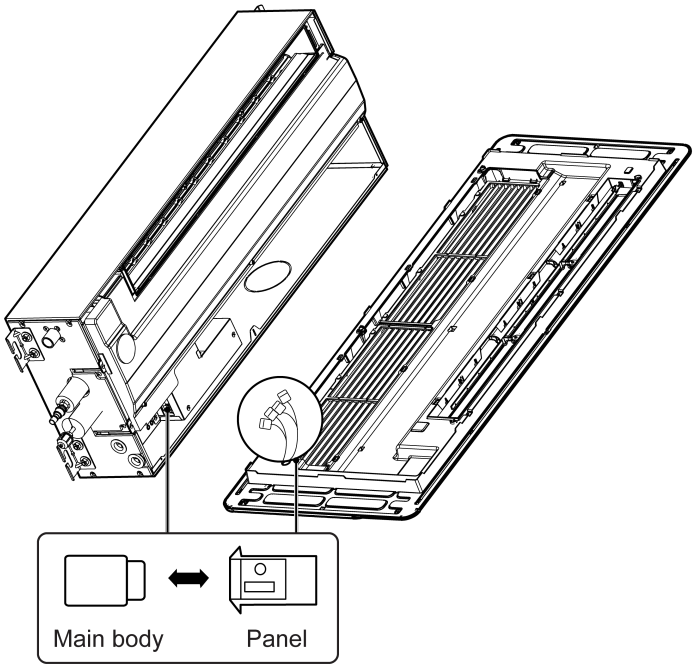

Fig.4.4.3

4.4.2 Panel Installation

(1) Remove the grille from the panel, and then open the horizontal louver.

(2) Aim the screw hole on panel at the corresponding screw hole on main unit.

(3) Screw up the screws on corresponding holes and then install the corresponding screw cover.

(4) Close the horizon lover, connect the butt terminal and arrange the wires.

(5) After tightening screws, reinstall the air inlet grille.

Unit: mm(inch)

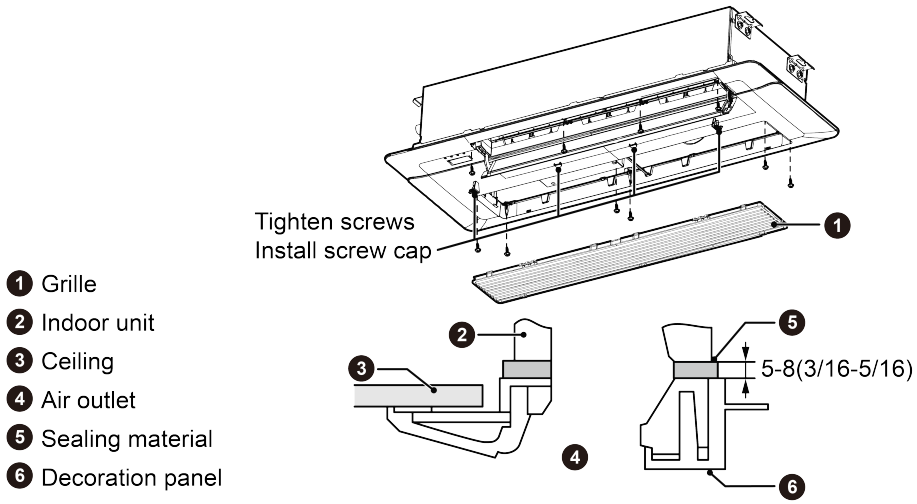

Fig.4.4.4

4.5 Installation of Wired Controller

Please refer to User Manual of Wired Controller for the installation details.

NOTICE! When installation is finished, the unit must be tested and debugged before operation. Please refer to Instruction Manual of ODU for auto addressing and debugging details.

5 Wiring Work

⚠ WARNING
Before obtaining access to terminals, all supply circuits must be disconnected.

NOTICE	
(1)	Units must be earthed securely, or it may cause electric shock.
(2)	Please carefully read the wiring diagram before carry out the wiring work, incorrect wiring could cause malfunction or even damage the unit.
(3)	The unit should be powered by independent circuit and specific socket.
(4)	The wiring should be in accordance with related regulations in order to ensure the units reliable running.
(5)	Install circuit breaker for branch circuit according to related regulations and electrical standards.
(6)	All wiring must use pressure terminal or single wire. Multi-twisted wire that connects directly to the wiring board may cause fire hazard.
(7)	Keep cable away from refrigerant pipings, compressor and fan motor.
(8)	Do not change the internal wiring of the air conditioner; otherwise, our company will not bear relevant legal responsibilities for the related damages.
(9)	If the unit is installed in places with strong electromagnetic interference, it's recommended to use twin-twisted shield wire. During wire connection, please pay attention that the metal shield layer of the twin-twisted wire must be grounded (outer case) in order to prevent the unit from electromagnetic interference.
(10)	The communication wires should be separated from power cord and connection wire between indoor unit and outdoor unit.
(11)	The electric wire can’t be expanded by connecting another electric wire. When the length of the electric wire is not enough, please contact our designated dealer or local service center for a special electric wire.

5.1 Connection of Wire and Patch Board Terminal

(1) The connection of wire (as shown in Fig.5.1.1)

1) Strip about 25mm (1 inch) insulation of the wire end by stripping and cutting tool.
2) Remove the wiring screws on the terminal board.
3) Shape the tail of wire into ring by needle nose plier, and keep the gauge of ring in accordance with screw.
4) Use the screwdriver for tightening the terminal.

(2) The connection of stranded wire (as shown in Fig.5.1.2)

1) Strip about 10mm (3/8 inch) insulation of the end of stranded wire by stripping and cutting tool.
2) Loosen the wiring screws on terminal board.
3) Insert the wire into the ring tongue terminal and tighten by crimping tool.
4) Use the screwdriver for tightening the terminal.

Unit:mm(inch)

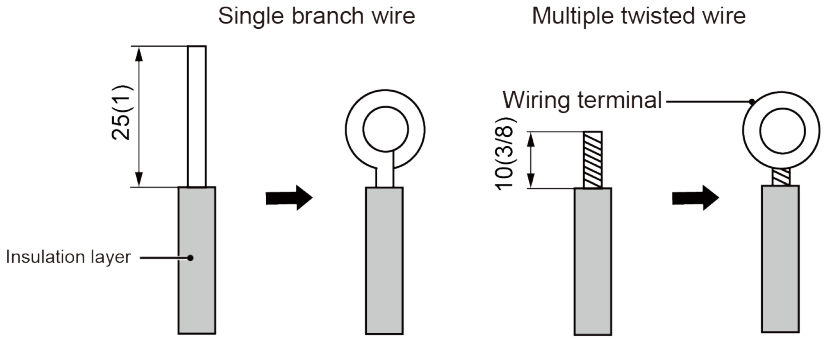

Fig.5.1.1 Fig.5.1.2

5.2 Power Cord Connection

NOTICE	
(1)	Every unit should be equipped with a circuit breaker for short-circuit and overload protection. In general, circuit breaker is at OFF status.
(2)	During operation, all indoor units and outdoor units belonging to the same system must be kept energized status. Otherwise, the unit can't operate normally.

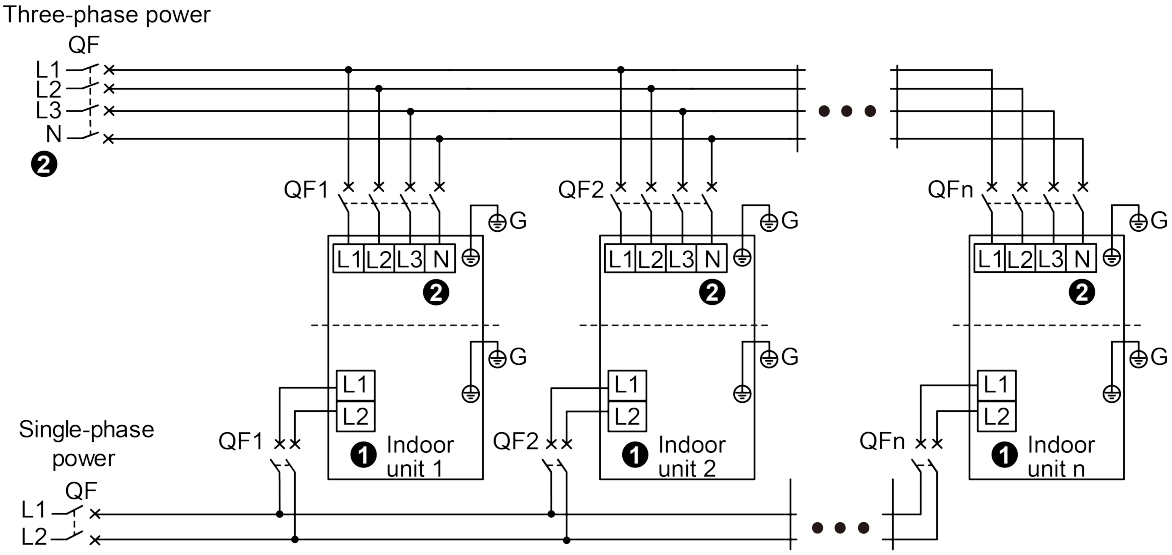

NOTICE (1) Connect wires for single-phase unit according to figure ❶ and connect wires for three-phase unit according to figure ❷.As for some areas where there's no neutral wire, please refer to the wiring diagram of unit for details.

(2) The maximum connection quantity "n" for indoor unit is decided by the capacity of outdoor unit. Please refer to the unit capacity of unit for details.

Fig.5.2.1

(1) Detach the electric box lid.

(2) Let the power cord pass through the wiring through-holes.

(3) Connect wires according to Fig. 5.2.1.

(4) Fix the power cord with wiring clamp.

(5) The wire diameter of power cord can't be less than 18AWG.

5.3 Connection of Communication Wire between Indoor Unit and Outdoor Unit (or Indoor Unit)

(1) Detach the electric box lid.

(2) Let the communication cable pass through the wiring through-holes.

(3) Connect the communication wire to terminal D1 and D2 of indoor 4-bit wiring board, as shown in Fig.5.3.1.

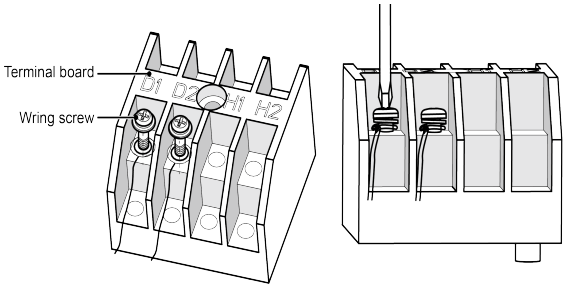

Fig.5.3.1

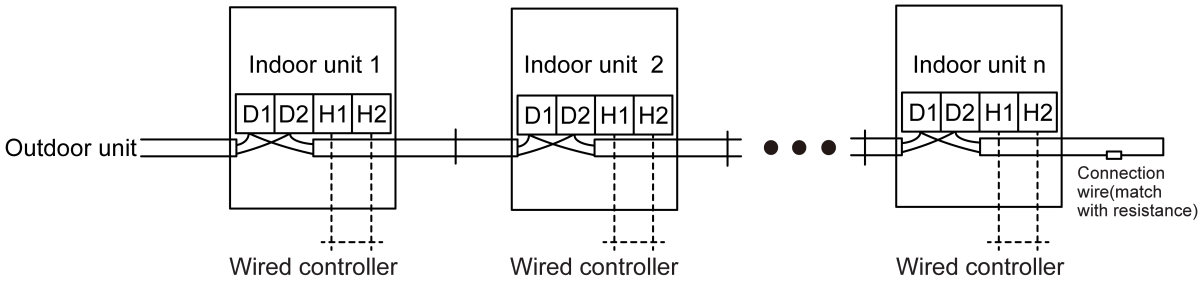

NOTICE Indoor unit quantity n is according to the outdoor unit capacity.

Fig.5.3.2

(4) Fix the communication cable with clamp of electric box.

(5) For more reliable communication, make sure connect the terminal resistor to the most downstream IDU of the communication bus (terminal D1 and D2), as shown in Fig.5.3.2, terminal resistor is provided with each ODU.

5.4 Connect Communication Wire of Wired Controller

(1) Open electric box cover of indoor unit.

(2) Let the communication wire go through the rubber ring.

(3) Connect the communication wire to terminal H1 and H2 of indoor 4-bit wiring board.

(4) Fix the communication wire with wire clip on the electric box.

(5) Wiring instructions of remote receiving light board and wired controller:

1) Wired controller is shown as Fig.5.4.1, wireless controller is shown as Fig.5.4.2 signal receiver is provided with panel as standard accessory.

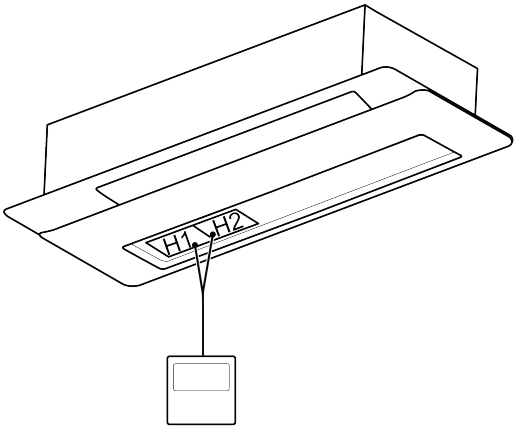

Fig.5.4.1

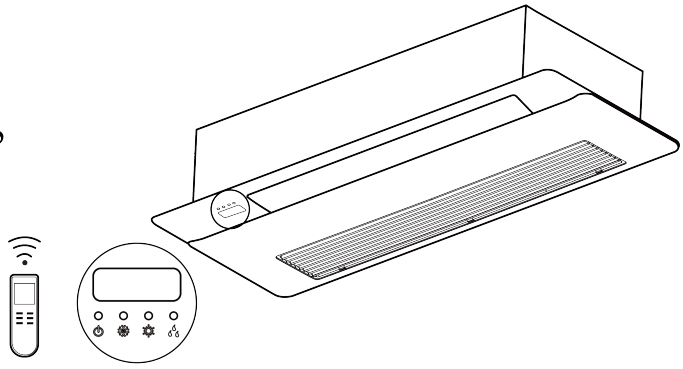

Fig.5.4.2

2) Both IDU and wired controller are equipped with signal receiver, and available for wireless control respectively.

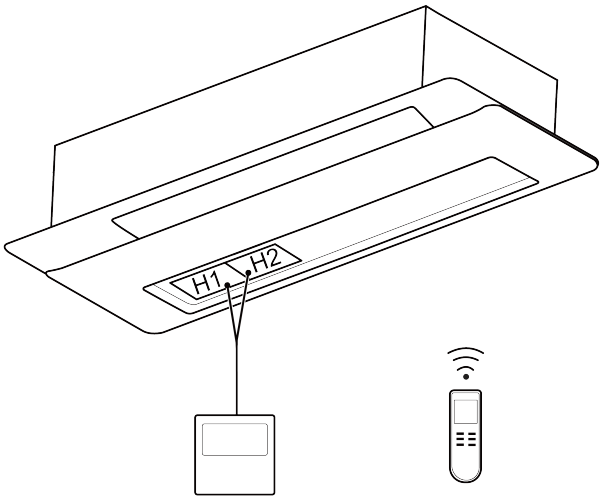

Fig.5.4.3

5.5 Illuminate for Connection of Wired Controller and Indoor Units Network

(1) Communication wire of indoor unit and outdoor unit (or indoor unit) is connected to D1, D2.

(2) Wired controller is connected to H1, H2.

(3) One indoor unit can connect two wired controllers that must be set as master one and slave one.

(4) One wired controller can control 16 indoor unitS in maximum at the same time (as shown in Fig.5.5.1).

NOTICE
(1) The type of indoor units must be the same if they are controlled by the same wired controller.
(2) When the indoor unit is controlled by two wired controllers, the addresses of the two wired controllers should be different through address setting. Address 1 is for main controller; Address 2 is for slave controller. Detailed setting please refer to the instruction manual of wired controller.

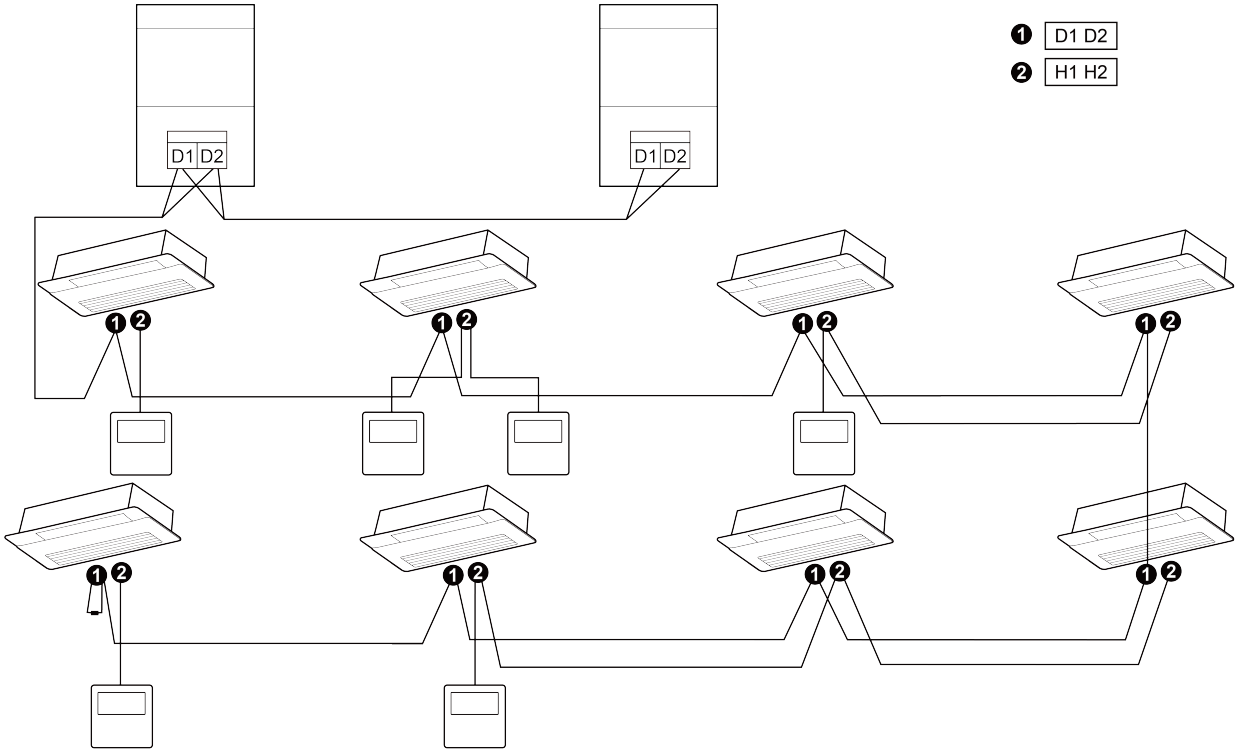

Fig.5.5.1

6 Routine Maintenance

NOTICE	
(1)	Do turn off the unit and cut off the main power supply when cleaning the air conditioner to avoid electric shock or injury.
(2)	Stand at solid table when cleaning the unit.
(3)	Do not clean the unit with hot water whose temperature is higher than 45°C to prevent fade or deformation.
(4)	Do not dry the filters by fire, or it may catch fire or become deformed.
(5)	Clean the filter with a wet cloth dipped in neutral detergent.
(6)	Please contact our designated dealer or local service center if there is abnormal situation.
(7)	Non-professional person is not allowed to open the air-in grille of indoor unit.

6.1 Cleaning of Filter

(1) Remove the filters from inlet of IDU. Use a vacuum cleaner to remove dust. If the filters are dirty, wash them with warm water and mild detergent, and dry the filters in the shade.

(2) If the unit used in the environment with much dust, please clean it regularly (Usually once every two weeks).

6.2 Maintenance before the Seasonal Use

(1) Check if the air inlet and air outlet of indoor and outdoor unit are blocked.

(2) Check if securely grounded.

(3) Check if all the power cord and communication cable are securely connected.

(4) Check if any error code displayed after energized.

6.3 Maintenance after the Seasonal Use

(1) Set the unit in fan mode for half a day in a sunny day to dry the inner part of unit;

(2) When the unit won't be used for a long time, please cut off power supply for energy saving; the characters on the wired controller screen will disappear after cutting off the power supply.

7 Table of Error Codes for Indoor Unit

Error Code	Content	Error Code	Content	Error Code	Content
L0	Indoor Unit Error	LA	Indoor Units Incompatibility Error	d9	Jumper Cap Error
L1	Indoor Fan Protection	LH	Low Air Quanlity Warning	dA	Indoor Unit Network Address Error
L2	E-heater Protection	LC	ODU-IDU Incompatibility Error	dH	Wired Controller PCB Error
L3	Water Full Protection	Ld	Protection for Indoor Fan (Fan 2)	dC	Capacity DIP Switch Setting Error
L4	Wired Controller Power Supply Error	d1	Indoor Unit PCB Error	dL	Indoor Unit CO_2 Sensor Error
L5	Freeze protection	d3	Ambient Temperature Sensor Error	dE	Capacity DIP Switch Setting Error
L6	Mode conflict	d4	Inlet Pipe Temperature Sensor Error	db	Special Code: Field Debugging Code
L7	No Master Indoor Unit Error	d6	Outlet Pipe Temperature Sensor Error	C0	Communication Error
L8	Power Insufficiency Protection	d7	Humidity Sensor Error	AJ	Filter Cleaning Reminder
L9	Quantity Of Group Control Indoor Units Setting Error	d8	Water Temperature Sensor Error	o0	Other Drive Malfunction
o1	Low Bus bar Voltage of Indoor Unit	o2	High Bus bar Voltage of Indoor Unit	o3	IPM Module Protection of Indoor Unit
o4	Failure Startup of Indoor Unit	o5	Overcurrent Protection of Indoor Unit	o6	Current Detection Circuit Malfunction of Indoor Unit
o7	Desynchronizing Protection of Indoor Unit	o8	Communication Malfunction of Indoor Unit's Drive	o9	Communication Malfunction of Main Mater of Indoor Unit
oA	High Temperature of Indoor Unit's Module	ob	Malfunction of Temperature Sensor of Indoor Unit's Module	oC	Charging Circuit Malfunction of Indoor Unit

8 Troubleshooting

The air conditioner is not expected to be serviced by users. Incorrect repair may cause electric shock or fire, so please contact an authorized service center for professional service. The following checks prior to contact may save your time and money.

Phenomenon	Troubleshooting
The unit can't start	① Power supply is not connected. ② Circuit breaker tripping caused by leakage of electricity. ③ Input voltage is too low. ④ Operation button is closed. ⑤ Control loop is abnormal.
The unit stops after running for a while.	① The inlet or outlet of ODU or IDU are blocked by obstacle. ② Control loop is abnormal. ③ Set the unit in cooling mode when outdoor ambient temperature is higher than 43℃ (109℉).
Poor cooling effect	① The filter is dirty or blocked. ② Too heavy heat load of room(e.g. too many people). ③ Door or windows is open. ④ Inlet and outlet of IDU are blocked. ⑤ Setting temperature is too high or refrigerant leaks. ⑥ The performance of room temperature sensor is getting worse.
Poor heating effect	① The filter is dirty or blocked. ② Door or window is open. ③ Setting temperature is too low. ④ Refrigerant leakage. ⑤ Outdoor ambient temperature is lower than -5℃（23℉）. ⑥ Abnormality of control circuit.
Indoor fan doesn't start up during heating	① Placing position of tube temperature sensor head is not suitable. ② Tube temperature sensor head isn't inserted well. ③ Wiring of tube temperature sensor head is broken. ④ Capacitor is leaking electricity.

NOTICE!

If air conditioner still fails to work normally after checking and handling as described above, please stop using it immediately and contact our designated dealer or local service center.

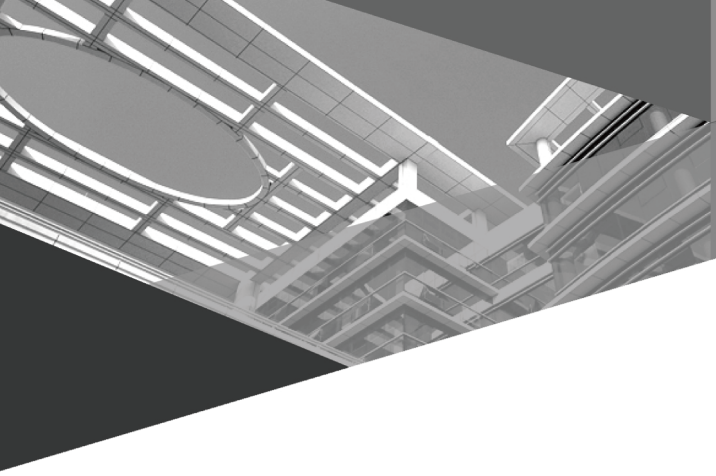

GREE ELECTRIC APPLIANCES, INC. OF ZHUHAI

Add: West Jinji Rd, Qianshan, Zhuhai,Guangdong, China, 519070
Tel: (+86-756) 8522218
Fax: (+86-756) 8669426
E-mail: global@cn.gree.com www.gree.com

600005000663