Service Manual

Multi Variable Air Conditioners

Indoor Units

(GC202205-XVII)

Capacity: 5800Btu/h~96000Btu/h

Rated Frequency: 60 Hz

GREE ELECTRIC APPLIANCES, INC. OF ZHUHAI

CONTENTS

PRODUCT **1**
CHAPTER 1 PRODUCT **2**
1 Product List **2**
1.1 Low Static Pressure Duct Type Indoor Unit 2
1.2 Slim Duct Type Indoor Unit 2
1.3 Four-way Cassette Type Indoor Unit 3
1.4 Wall Mounted Type Indoor Unit 3
1.5 Console Type Indoor Unit 4
1.6 High Static Pressure Duct Type Indoor Unit 4
1.7 Two-way Cassette Type Indoor Unit 5
1.8 Floor Ceiling Type Indoor Unit 5
1.9 Fresh Air Processing Type Indoor Unit 6
1.10 Compact Four-way Cassette Type Indoor Unit 6
1.11 Super High Static Pressure Duct Type Indoor Unit 6
1.12 Air Handler type Indoor Unit 7
1.13 AHU-KIT 8
1.14 1-way Cassette Type Indoor Unit 9
1.15 General Static Pressure Duct Type Indoor Unit 9
1.16 360°Air Discharge Compact Cassette Type Indoor Unit 9
1.17 360°Air Discharge Cassette Type Indoor Unit 10
2 Nomenclature **11**
3 Product Features **12**
3.1 Features of Low Static Pressure Duct Type Indoor Unit 12
3.2 Features of Slim Duct Type Indoor Unit 12
3.3 Features of Four-way Cassette Type Indoor Unit 13
3.4 Features of Wall Mounted Type Indoor Unit 13
3.5 Features of Console Type Indoor Unit 14
3.6 Features of High Static Pressure Duct Type Indoor Unit 14
3.7 Features of Two-way Cassette Type Indoor Unit 14
3.8 Features of Floor Ceiling Type Indoor Unit 15
3.9 Features of Fresh air Processing Type Indoor Unit 15
3.10 Features of Compact Four-way Cassette Type Indoor Unit 16
3.11 Features of Super High Static Pressure Duct Type Indoor Unit 16
3.12 Features of Air Handler Type Indoor Unit 17
3.13 Features of AHU-KIT 17
3.14 Features of 1-way Cassette Type Indoor Unit 18
3.15 Features of General Static Pressure Duct Type Indoor Unit 18

3.16 Features of 360°Air Discharge Compact Cassette Type Indoor Unit 18
3.17 Features of 360°Air Discharge Cassette Type Indoor Unit 19
4 Specifications 20
4.1 Low Static Pressure Duct Type Indoor Unit 20
4.2 Slim Duct Type Indoor Unit 24
4.3 Four-way Cassette Type Indoor Unit 26
4.4 Wall Mounted Type Indoor Unit 28
4.5 Console Type Indoor Unit 32
4.6 High Static Pressure Duct Type Indoor Unit 33
4.7 Two-way Cassette Type Indoor Unit 35
4.8 Floor Ceiling Type Indoor Unit 37
4.9 Fresh air Processing Type Indoor Unit 39
4.10 Compact Four-way Cassette Type Indoor Unit 41
4.11 Super High Static Pressure Duct Type Indoor Unit 42
4.12 Air Handler Type Indoor Unit 46
4.13 AHU-KIT 50
4.14 1-way Cassette Type Indoor Unit 53
4.15 General Static Pressure Duct Type Indoor Unit 54
4.16 360°Air Discharge Compact Cassette Type Indoor Unit 55
4.17 360°Air Discharge Cassette Type Indoor Unit 57
CONTROL 60
CHAPTER 2 CONTROL 61
1 Operation Flowchart 61
2 Wired Controller 62
2.1 Control Panel 62
2.2 Installation and Removal 69
3 Remote Controller 74
3.1 Remote Controller YAP1F 74
3.2 Remote Controller YV1L1 75
4 Introduction to Unit Functions 76
4.1 Engineering Application Functions Operated through the XK46 Wired Controller 76
4.2 Engineering Application Functions Operated through the XK49 Wired Controller 91
4.3 Engineering Application Functions Operated through the XK79 Wired Controller 93
4.4 Engineering Application Functions Operated through the YV1L1 Remote Controller 96
4.5 Engineering Application Functions Operated through the YAP1F Remote Controller 102
INSTALLATION 104
CHAPTER 3 INSTALLATION 105
1 Engineering Installation Preparation and Notice 105

1.1 Installation Notice 105
1.2 Installation Key Points and Importance 105
2 Installation Materials Selection 106
2.1 Refrigerant Piping 107
2.2 Condensate Water Pipe 107
2.3 Insulation Material 107
2.4 Communication Cable and Control Cable 108
2.5 Power Cable 108
2.6 Hanger Rod and Support 108
3 Installation of Indoor Unit 109
3.1 Installation of Low Static Pressure Duct Type Indoor Unit 109
3.2 Installation of Slim Duct Type Indoor Unit 113
3.3 Installation of Four-way Cassette Type Indoor Unit 115
3.4 Installation of Wall-mounted Indoor Unit 117
3.5 Installation of Console Type Indoor Unit 119
3.6 Installation of High Static Pressure Duct Type Indoor Unit 121
3.7 Installation of Two-way Cassette Type Indoor Unit 125
3.8 Installation of Floor Ceiling Type Indoor Unit 128
3.9 Installation of Fresh Air Processing Indoor Unit 130
3.10 Installation of Compact Four-way Cassette Type Indoor Unit 132
3.11 Installation of Super High Static Pressure Duct Type Indoor Unit 134
3.12 Installation of Air Handler type Indoor Unit 137
3.13 Installation of AHU-KIT 142
3.14 Installation of 1-way Cassette Type Indoor Unit 148
3.15 Installation of General Static Pressure Duct Type Indoor Unit 150
3.16 Installation of 360°Air Discharge Compact Cassette Type Indoor Unit 151
3.17 Installation of 360°Air Discharge Cassette Type Indoor Unit 153
4 Installation of Connection Pipe 154
4.1 Flaring Process 154
4.2 Pipe Bending 155
4.3 Indoor Pipe Connection 155
5 Installation of Drain Pipe 156
5.1 Precautions When Doing the Piping Work 156
5.2 Installing the Drain Pipes 157
5.3 Precautions When Doing Riser Piping Work 159
5.4 Testing of Drain Piping 159
6 Electrical Installation 160
MAINTENANCE 161

CHAPTER 4 MAINTENANCE 162
1 Malfunction List 162
1.1 Malfunction List for the Wired Controller 162
1.2 Display of Light Board (Only for Two-way Cassette Type Indoor Unit) 162
1.3 Exception Analyzing and Troubleshooting 163
2 After-sales Emergency Masures 176
3 Wiring Diagram 177
3.1 Low Static Pressure Duct Type Indoor Unit 177
3.2 Slim Duct Type Indoor Unit 178
3.3 Four-way Cassette Type Indoor Unit 179
3.4 Wall Mounted Type Indoor Unit 180
3.5 Console Type Indoor Unit 181
3.6 High Static Pressure Duct Type Indoor Unit 182
3.7 Two-way Cassette Type Indoor Unit 183
3.8 Floor Ceiling Type Indoor Unit 184
3.9 Fresh Air Processing Indoor Unit 185
3.10 Compact Four-way Cassette Type Indoor Unit 186
3.11 Super High Static Pressure Duct Type Indoor Unit 186
3.12 Air Handler type Indoor Unit 188
3.13 AHU-KIT 190
3.14 1-way Cassette Type Indoor Unit 191
3.15 General Static Pressure Duct Type Indoor Unit 192
3.16 360°Air Discharge Compact Casssette Type Indoor Unit 192
3.17 360°Air Discharge Casssette Type Indoor Unit 193
4 Disassembly And Assembly Procedure of Main Parts 195
4.1 Low Static Pressure Duct Type Indoor Unit 195
4.2 Slim Duct Type Indoor Unit 197
4.3 Four-way Cassette Type Indoor Unit 198
4.4 Wall Mounted Type Indoor Unit 200
4.5 Console Type Indoor Unit 202
4.6 High Static Pressure Duct Type Indoor Unit 203
4.7 Two-way Cassette Type Indoor Unit 205
4.8 Floor Ceiling Type Indoor Unit 207
4.9 Fresh Air Processing Indoor Unit 209
4.10 Compact Four-way Cassette Type Indoor Unit 211
4.11 Super High Static Pressure Duct Type Indoor Unit 214
4.12 Air Handler type Indoor Unit 216
4.13 1-way Cassette Type Indoor Unit 216
4.14 General Static Pressure Duct Type Indoor Unit 219

4.15 360°Air Discharge Compact Casssette Type Indoor Unit 220
4.16 360°Air Discharge Casssette Type Indoor Unit 222
5 Exploded Views and Part List 225
5.1 Low Static Pressure Duct Type Indoor Unit 225
5.2 Slim Duct Type Indoor Unit 238
5.3 Four-way Cassette Type Indoor Unit 245
5.4 High Static Pressure Duct Type Indoor Unit 250
5.5 Two-way Cassette Type Indoor Unit 256
5.6 Floor Ceiling Type Indoor Unit 263
5.7 Fresh Air Processing Type Indoor Unit 273
5.8 Console Type Indoor Unit 276
5.9 Wall Mounted type Indoor Unit 278
5.10 Compact Four-way Cassette Type Indoor Unit 290
5.11 Super High Static Pressure Duct Type Indoor Unit 292
5.12 Air Handler type Indoor Unit 302
5.13 AHU-KIT 312
5.14 1-way Cassette Type Indoor Unit 320
5.15 General Static Pressure Duct Type Indoor Unit 322
5.16 360°Air Discharge Compact Casssette Type Indoor Unit 324
5.17 360°Air Discharge Casssette Type Indoor Unit 326

PRODUCT

CHAPTER 1 PRODUCT

1 Product List

1.1 Low Static Pressure Duct Type Indoor Unit

Model	Product Code	Cooling Capacity kW(Btu/h)	Heating Capacity kW(Btu/h)	Power Supply	Refrigerant	Appearance
GMV-ND07PLS/A-T(U)	CM810N0080	2.2 (7500)	2.5 (8500)	208/230V ~60Hz	R410A	
GMV-ND09PLS/A-T(U)	CM810N0090	2.8 (9500)	3.1 (10500)			
GMV-ND12PLS/A-T(U)	CM810N0100	3.5 (12000)	4.0 (13500)			
GMV-ND14PLS/A-T(U)	CM810N0120	4.4 (15000)	5.0 (17000)			
GMV-ND18PLS/A-T(U)	CM810N0070	5.3 (18000)	5.9 (20000)			
GMV-ND22PLS/A-T(U)	CM810N0110	7.0 (24000)	7.9 (27000)			
GMV-ND05PLS/B1-T(U)	CM810N2170	1.7 (5800)	1.8 (6200)	208/230V ~60Hz	R410A	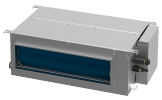
GMV-ND07PLS/B1-T(U)	CM810N2190	2.2 (7500)	2.8 (9500)			
GMV-ND09PLS/B1-T(U)	CM810N2180	2.8 (9500)	3.2 (10500)			
GMV-ND12PLS/B1-T(U)	CM810N2220	3.6 (12000)	4.0 (13500)			
GMV-ND14PLS/B1-T(U)	CM810N2200	4.0 (15000)	4.5 (17000)			
GMV-ND18PLS/B1-T(U)	CM810N2210	5.6 (18000)	6.3 (20000)			
GMV-ND24PLS/B1-T(U)	CM810N2230	7.1 (24000)	8.0 (27000)			

1.2 Slim Duct Type Indoor Unit

Model	Product Code	Cooling Capacity kW(Btu/h)	Heating Capacity kW(Btu/h)	Power Supply	Refrigerant	Appearance
GMV-ND06PLS/B-T(U)	CM810N1980	1.8 (6000)	1.8 (6000)	208/230V ~60Hz	R410A	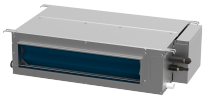
GMV-ND07PLS/B-T(U)	CM810N1720	2.2 (7500)	2.8 (8500)			
GMV-ND09PLS/B-T(U)	CM810N1710	2.8 (9500)	3.2 (10500)			
GMV-ND12PLS/B-T(U)	CM810N1700	3.6 (12000)	4.0 (13500)			
GMV-ND14PLS/B-T(U)	CM810N1690	4.0 (15000)	4.5 (17000)			
GMV-ND18PLS/B-T(U)	CM810N1680	5.6 (18000)	6.3 (20000)			
GMV-ND24PLS/B-T(U)	CM810N1670	7.1 (24000)	8.0 (27000)			

1.3 Four-way Cassette Type Indoor Unit

Model	Product Code	Cooling Capacity kW (Btu/h)	Heating Capacity kW (Btu/h)	Power Supply	Refrigerant	Appearance
GMV-ND07T/A-T(U)	CM500N0520	2.2 (7500)	2.5 (8500)	208/230V ~60Hz	R410A	
GMV-ND09T/A-T(U)	CM500N0530	2.8 (9500)	3.1 (10500)			
GMV-ND12T/A-T(U)	CM500N0540	3.5 (12000)	4.0 (13500)			
GMV-ND15T/A-T(U)	CM500N0670	4.4 (15000)	5 (17000)			
GMV-ND18T/A-T(U)	CM500N0510	5.3 (18000)	5.9 (20000)			
GMV-ND24T/A-T(U)	CM500N0550	7.0 (24000)	7.9 (27000)			
GMV-ND30T/A-T(U)	CM500N0560	8.8 (30000)	10 (34000)			
GMV-ND36T/A-T(U)	CM500N0570	10.6 (36000)	11.7 (40000)			
GMV-ND42T/A-T(U)	CM500N0580	12.3 (42000)	13.8 (47000)			
GMV-ND48T/A-T(U)	CM500N0590	14.1 (48000)	15.8 (54000)			

1.4 Wall Mounted Type Indoor Unit

Model	Product Code	Cooling Capacity kW (Btu/h)	Heating Capacity kW (Btu/h)	Power Supply	Refrigerant	Appearance
GMV-N07G/A3A-D(U)	CM100N1480	2.2 (7500)	2.5 (8500)	208/230V ~60Hz	R410A	
GMV-N09G/A3A-D(U)	CM100N1490	2.8 (9500)	3.2 (11000)			
GMV-N12G/A3A-D(U)	CM100N1500	3.5 (12000)	4.0 (13500)			
GMV-N18G/A3A-D(U)	CM100N1510	5.2 (18000)	5.8 (20000)			
GMV-N24G/A3A-D(U)	CM100N1520	7.0 (24000)	7.5 (25500)			
GMV-N07G/E3A-D(U)	CM100N2330	2.2 (7500)	2.5 (8500)	208/230V ~60Hz	R410A	
GMV-N09G/E3A-D(U)	CM100N2340	2.8 (9500)	3.2 (11000)			
GMV-N12G/E3A-D(U)	CM100N2350	3.5 (12000)	4.0 (13500)			
GMV-N18G/E3A-D(U)	CM100N2360	5.2 (18000)	5.8 (20000)			
GMV-N24G/E3A-D(U)	CM100N2370	7.0 (24000)	7.5 (25500)			

Model	Product Code	Cooling Capacity kW (Btu/h)	Heating Capacity kW (Btu/h)	Power Supply	Refrigerant	Appearance
GMV-ND06G/B4B-T(U)	CM100N2950	1.8 (6000)	1.8 (6000)	208/230V ~60Hz	R410A	
GMV-ND07G/B4B-T(U)	CM100N2960	2.2 (7500)	2.5 (8500)			
GMV-ND09G/B4B-T(U)	CM100N2970	2.8 (9500)	3.2 (10500)			
GMV-ND12G/B4B-T(U)	CM100N2980	3.5 (12000)	4.0 (13500)			
GMV-ND14G/B4B-T(U)	CM100N2990	4.4 (15000)	5.0 (17000)			
GMV-ND18G/B4B-T(U)	CM100N3000	5.2 (18000)	5.8 (20000)			
GMV-ND24G/B4B-T(U)	CM100N3010	7.0 (24000)	7.5 (25500)			
GMV-ND30G/B4B-T(U)	CM100N3020	8.8 (30000)	10.0 (34000)			
GMV-ND36G/B4B-T(U)	CM100N3030	9.5 (32500)	10.5 (36000)			

1.5 Console Type Indoor Unit

Model	Product Code	Cooling Capacity kW (Btu/h)	Heating Capacity kW (Btu/h)	Power Supply	Refrigerant	Appearance
GMV-ND07C/A-T(U)	CM400N0110	2.2 (7500)	2.5 (8500)	208/230V ~60Hz	R410A	
GMV-ND09C/A-T(U)	CM400N0120	2.8 (9500)	3.2 (11000)			
GMV-ND12C/A-T(U)	CM400N0100	3.5 (12000)	4.0 (13500)			
GMV-ND18C/A-T(U)	CM400N0130	5.3 (18000)	5.8 (20000)			

1.6 High Static Pressure Duct Type Indoor Unit

Model	Product Code	Cooling Capacity kW (Btu/h)	Heating Capacity kW (Btu/h)	Power Supply	Refrigerant	Appearance
GMV-ND18PHS/A-T(U)	CM810N0140	5.3 (18000)	5.9 (20000)	208/230V ~60Hz	R410A	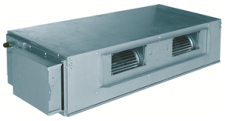
GMV-ND24PHS/A-T(U)	CM810N0150	7.0 (24000)	7.9 (27000)			
GMV-ND30PHS/A-T(U)	CM810N0160	8.8 (30000)	10.0 (34000)			
GMV-ND36PHS/A-T(U)	CM810N0170	10.6 (36000)	11.7 (40000)			
GMV-ND42PHS/A-T(U)	CM810N0180	12.3 (42000)	13.8 (47000)			
GMV-ND48PHS/A-T(U)	CM810N0190	14.1 (48000)	15.8 (54000)			
GMV-ND72PH/A-T(U)	CM810N0280	20.2 (72000)	22.6 (77000)			
GMV-ND96PH/A-T(U)	CM810N0290	27.0 (92000)	30.2 (103000)			

1.7 Two-way Cassette Type Indoor Unit

Model	Product Code	Cooling Capacity kW (Btu/h)	Heating Capacity kW (Btu/h)	Power Supply	Refrigerant	Appearance
GMV-ND09TS/A-T(U)	CM500N0890	2.8 (9500)	3.1 (10500)	208/230V ~60Hz	R410A	
GMV-ND12TS/A-T(U)	CM500N0900	3.5 (12000)	4.0 (13500)			
GMV-ND15TS/A-T(U)	CM500N0910	4.4 (15000)	5.0 (17000)			
GMV-ND18TS/A-T(U)	CM500N0920	5.3 (18000)	5.9 (20000)			
GMV-ND24TS/A-T(U)	CM500N0930	7.0 (24000)	7.9 (27000)			
GMV-ND09TS/B-T(U)	CM500N1890	2.8 (9500)	3.1 (10500)	208/230V ~60Hz	R410A	
GMV-ND12TS/B-T(U)	CM500N1900	3.5 (12000)	4.0 (13500)			
GMV-ND15TS/B-T(U)	CM500N1840	4.4 (15000)	5.0 (17000)			
GMV-ND18TS/B-T(U)	CM500N1880	5.3 (18000)	5.9 (20000)			
GMV-ND24TS/B-T(U)	CM500N1830	7.0 (24000)	7.9 (27000)			

1.8 Floor Ceiling Type Indoor Unit

Model	Product Code	Cooling Capacity kW (Btu/h)	Heating Capacity kW (Btu/h)	Power Supply	Refrigerant	Appearance
GMV-ND09ZD/A-T(U)	CM600N0420	2.8 (9500)	3.1 (10500)	208/230V ~60Hz	R410A	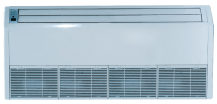
GMV-ND12ZD/A-T(U)	CM600N0430	3.5 (12000)	4.0 (13500)			
GMV-ND18ZD/A-T(U)	CM600N0440	5.3 (18000)	5.9 (20000)			
GMV-ND24ZD/A-T(U)	CM600N0450	7.0 (24000)	7.9 (27000)			
GMV-ND30ZD/A-T(U)	CM600N0460	8.8 (30000)	10.0 (33000)			
GMV-ND36ZD/A-T(U)	CM600N0470	10.6 (36000)	11.7 (40000)			
GMV-ND42ZD/A-T(U)	CM600N0480	12.3 (42000)	13.8 (47000)			
GMV-ND48ZD/A-T(U)	CM600N0490	14.1 (48000)	15.8 (54000)			

1.9 Fresh Air Processing Type Indoor Unit

Model	Product Code	Cooling Capacity kW (Btu/h)	Heating Capacity kW (Btu/h)	Power Supply	Refrigerant	Appearance
GMV-NDX42P/A-T(U)	CM810N1250	12.3 (42000)	8.5 (29000)	208/230V ~60Hz	R410A	
GMV-NDX48P/A-T(U)	CM810N1030	14.1 (48000)	10.0 (34000)			
GMV-NDX54P/A-T(U)	CM810N1240	15.8 (54000)	13.2 (45000)	208/230V ~60Hz	R410A	
GMV-NDX72P/A-T(U)	CM810N0480	21.1 (72000)	16.1 (55000)			
GMV-NDX96P/A-T(U)	CM810N0470	28.1 (96000)	20.0 (68000)			

1.10 Compact Four-way Cassette Type Indoor Unit

Model	Product Code	Cooling Capacity kW (Btu/h)	Heating Capacity kW (Btu/h)	Power Supply	Refrigerant	Appearance
GMV-ND07T/B-T(U)	CM500N0940	2.2 (7500)	2.5 (8500)	208/230V ~60Hz	R410A	
GMV-ND09T/B-T(U)	CM500N0950	2.8 (9500)	3.1 (10500)			
GMV-ND12T/B-T(U)	CM500N0960	3.5 (12000)	4.0 (13500)			
GMV-ND15T/B-T(U)	CM500N0970	4.4 (15000)	5.0 (17000)			
GMV-ND18T/B-T(U)	CM500N0980	5.3 (18000)	5.9 (20000)			

1.11 Super High Static Pressure Duct Type Indoor Unit

Model	Product Code	Cooling Capacity kW (Btu/h)	Heating Capacity kW (Btu/h)	Power Supply	Refrigerant	Appearance
GMV-ND07PHS/B-T(U)	CM810N0830	2.2 (7500)	2.5 (8500)	208/230V ~60Hz	R410A	
GMV-ND09PHS/B-T(U)	CM810N0790	2.8 (9500)	3.1 (10500)			
GMV-ND12PHS/B-T(U)	CM810N0800	3.5 (12000)	4.0 (13500)	208/230V ~60Hz	R410A	
GMV-ND15PHS/B-T(U)	CM810N0770	4.4 (15000)	5.0 (17000)			
GMV-ND18PHS/B-T(U)	CM810N0810	5.3 (18000)	5.9 (20000)			
GMV-ND22PHS/B-T(U)	CM810N0720	6.4 (22000)	7.0 (24000)			
GMV-ND24PHS/B-T(U)	CM810N0730	7.0 (24000)	7.9 (27000)			

Model	Product Code	Cooling Capacity kW (Btu/h)	Heating Capacity kW (Btu/h)	Power Supply	Refrigerant	Appearance
GMV-ND30PHS/B-T(U)	CM810N0780	8.8 (30000)	10.0 (34000)	208/230V ~60Hz	R410A	
GMV-ND36PHS/B-T(U)	CM810N0740	10.6 (36000)	11.7 (40000)			
GMV-ND42PHS/B-T(U)	CM810N0750	12.3 (42000)	13.8 (47000)			
GMV-ND48PHS/B-T(U)	CM810N0820	14.1 (48000)	15.0 (54000)			
GMV-ND54PHS/B-T(U)	CM810N0760	15.8 (54000)	17.6 (60000)			
GMV-ND72PH/B-T(U)	CM810N1600	21.1 (72000)	23.7 (81000)	208/230V ~60Hz	R410A	
GMV-ND96PH/B-T(U)	CM810N1590	28.1 (96000)	31.7 (108000)			

1.12 Air Handler type Indoor Unit

GMV-ND**A/A-T(U):

Model	Product Code	Cooling Capacity kW (Btu/h)	Heating Capacity kW (Btu/h)	Power Supply	Refrigerant	Appearance
GMV-ND09A/A-T(U)	CM810N1900	2.8 (9500)	3.1 (10500)	208/230V ~60Hz	R410A	
GMV-ND12A/A-T(U)	CM810N1910	3.5 (12000)	4.0 (13500)			
GMV-ND18A/A-T(U)	CM810N1890	5.3 (18000)	5.9 (20000)			
GMV-ND24A/A-T(U)	CM810N0660	7.0 (24000)	7.9 (27000)			
GMV-ND30A/A-T(U)	CM810N0670	8.8 (30000)	10.0 (34000)			
GMV-ND36A/A-T(U)	CM810N0700	10.6 (36000)	11.7 (40000)			
GMV-ND42A/A-T(U)	CM810N0690	12.3 (42000)	13.8 (47000)			
GMV-ND48A/A-T(U)	CM810N0680	14.1 (48000)	15.8 (54000)			
GMV-ND54A/A-T(U)	CM810N0710	15.8 (54000)	17.6 (60000)			

GMV-ND**A/B-T(U):

Model	Product Code	Cooling Capacity kW (Btu/h)	Heating Capacity kW (Btu/h)	Power Supply	Refrigerant	Appearance
GMV-ND09A/B-T(U)	CM810N2340	2.78 (9500)	3.08 (10500)	208/230V ~60Hz	R410A	
GMV-ND12A/B-T(U)	CM810N2280	3.52 (12000)	3.96 (13500)			
GMV-ND18A/B-T(U)	CM810N2300	5.28 (18000)	5.86 (20000)			
GMV-ND24A/B-T(U)	CM810N2350	7.03 (24000)	7.91 (27000)			
GMV-ND30A/B-T(U)	CM810N2290	8.79 (30000)	9.96 (34000)			
GMV-ND36A/B-T(U)	CM810N2330	10.55 (36000)	11.72 (40000)			
GMV-ND42A/B-T(U)	CM810N2260	12.31 (42000)	13.77 (47000)			
GMV-ND48A/B-T(U)	CM810N2310	14.07 (48000)	15.83 (54000)			
GMV-ND54A/B-T(U)	CM810N2320	15.83 (54000)	17.58 (60000)			
GMV-ND60A/B-T(U)	CM810N2270	17.58 (60000)	19.34 (66000)			

1.13 AHU-KIT

Model	Product Code	Cooling Capacity kW (Btu/h)	Heating Capacity kW (Btu/h)	Power Supply	Refrigerant	Appearance
GMV-N12U/A-T(U)	CN750N0101	3.5 (12000)	4.0 (13500)	208/230V ~60Hz	R410A	
GMV-N24U/A-T(U)	CN750N0061	7.0 (24000)	7.9 (27000)			
GMV-N48U/A-T(U)	CN750N0071	14.1 (48000)	15.8 (54000)			
GMV-N96U/A-T(U)	CN750N0081	28.1 (96000)	31.7 (108000)			
GMV-N192U/A-T(U)	CN750N0091	56.3 (192000)	63.3 (216000)			
GMV-N12U/C-T(U)	CN750N0250	3.5 (12000)	4.0 (13500)	208/230V ~60Hz	R410A	
GMV-N24U/C-T(U)	CN750N0230	7.0 (24000)	7.9 (27000)			
GMV-N48U/C-T(U)	CN750N0240	14.1 (48000)	15.8 (54000)			
GMV-N96U/C-T(U)	CN750N0210	28.1 (96000)	31.7 (108000)			
GMV-N192U/C-T(U)	CN750N0220	56.3 (192000)	63.3 (216000)			

1.14 1-way Cassette Type Indoor Unit

Model	Product Code	Cooling Capacity kW (Btu/h)	Heating Capacity kW (Btu/h)	Power Supply	Refrigerant	Appearance
GMV-ND07TD/A-T(U)	CM502N0152	2.2 (7500)	2.5 (8500)	208/230V ~60Hz	R410A	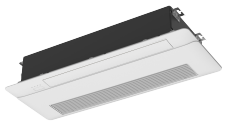
GMV-ND09TD/A-T(U)	CM502N0162	2.8 (9500)	3.2 (10500)			
GMV-ND12TD/A-T(U)	CM502N0182	3.6 (12000)	4.0 (13500)			

1.15 General Static Pressure Duct Type Indoor Unit

Model	Product Code	Cooling Capacity kW(Btu/h)	Heating Capacity kW(Btu/h)	Power Supply	Refrigerant	Appearance
GMV-ND30PLS/C-T(U)	CM810N2020	8.8 (30000)	10.0 (34000)	208/230V ~60Hz	R410A	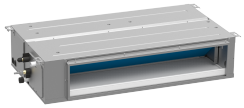
GMV-ND36PLS/C-T(U)	CM810N2010	10.6 (36000)	11.7 (40000)			
GMV-ND42PLS/C-T(U)	CM810N2000	12.3 (42000)	13.8 (47000)			
GMV-ND48PLS/C-T(U)	CM810N1990	14.1 (48000)	15.8 (54000)			

1.16 360°Air Discharge Compact Cassette Type Indoor Unit

Model	Product Code	Cooling Capacity kW (Btu/h)	Heating Capacity kW (Btu/h)	Power Supply	Refrigerant	Appearance
GMV-ND05T/E-T(U)	CM500N1600	1.7 (5800)	1.8 (6200)	208/230V ~60Hz	R410A	
GMV-ND07T/E-T(U)	CM500N1590	2.2 (7500)	2.5 (8500)			
GMV-ND09T/E-T(U)	CM500N1620	2.8 (9500)	3.1 (10500)			
GMV-ND12T/E-T(U)	CM500N1580	3.5 (12000)	4.0 (13500)			
GMV-ND15T/E-T(U)	CM500N1610	4.4 (15000)	5.0 (17000)			
GMV-ND18T/E-T(U)	CM500N1570	5.3 (18000)	5.9 (20000)			

1.17 360°Air Discharge Cassette Type Indoor Unit

Model	Product Code	Cooling Capacity kW (Btu/h)	Heating Capacity kW (Btu/h)	Power Supply	Refrigerant	Appearance
GMV-ND07T/C-T(U)	CM500N1560	2.2 (7500)	2.5 (8500)	208/230V ~60Hz	R410A	
GMV-ND09T/C-T(U)	CM500N1480	2.8 (9500)	3.1 (10500)			
GMV-ND12T/C-T(U)	CM500N1530	3.5 (12000)	4.0 (13500)			
GMV-ND15T/C-T(U)	CM500N1460	4.4 (15000)	5.0 (17000)			
GMV-ND18T/C-T(U)	CM500N1470	5.3 (18000)	5.9 (20000)			
GMV-ND22T/C-T(U)	CM500N1520	6.4 (22000)	7.0 (24000)			
GMV-ND24T/C-T(U)	CM500N1490	7.0 (24000)	7.9 (27000)			
GMV-ND30T/C-T(U)	CM500N1550	8.8 (30000)	10 (34000)			
GMV-ND36T/C-T(U)	CM500N1500	10.6 (36000)	11.7 (40000)			
GMV-ND42T/C-T(U)	CM500N1450	12.3 (42000)	13.8 (47000)			
GMV-ND48T/C-T(U)	CM500N1540	14.1 (48000)	15.8 (54000)			
GMV-ND54T/C-T(U)	CM500N1870	15.8 （54000）	17.6 （60000）			

2 Nomenclature

Nomenclature of Indoor Unit:

GMV	-	N	□	□	□	□	□	/	□	-	□	□
1		2	3	4	5	6	7		8		9	10

No.	Description	Options
1	Product code	GMV-Gree Multi VRF Units
2	indoor unit code	indoor unit-N
3	Motor type	D-DC motor NULL-AC motor
4	Function code	X-fresh air W-double thermal source
5	Cooling capacity/air volume code	Indoor unit: nominal cooling capacity /1000(Btu/h) All heat exchanger: air volume /100(m^3/h)
6	Unit type	PL-low static pressure duct type indoor unit P-standard static pressure duct type indoor unit PH-high static pressure duct type indoor unit PB-slim type duct type indoor unit T-Four-way Cassette type indoor unit A-Air handler type indoor unit TD-one-way cassette type indoor unit TS-two-way cassette type indoor unit ZD-floor ceiling type indoor unit ZK-combine type indoor unit C-console type indoor unit G-wall-mounted type indoor unit L-Floor Standing type indoor unit U-AHU-KIT type indoor unit
7	With water pump or not	With water pump-S (S is not displayed for the cassette unit with water pump)
8	Design serial No.	Nominate by A, B, C or expand it by 1, 2, 3…
9	Power	T-208/230V~,60Hz
10	Sale Area code	(U)-North America

3 Product Features

3.1 Features of Low Static Pressure Duct Type Indoor Unit

- Low static pressure, low noise

Especially suitable for rooms of compact structure or small installation space. Also it provides you with a comfortable and quiet living environment.

- Convenient installation

Tab type plastic filter, detachable fan motor, independent water pump assembly, all for convenient maintenance.

- Intelligent drainage device

Water height difference up to 3.3ft.which can effectively drain out condensing water and save space.

- Protection function

Water overflow protection, anti-freezing protection, fan motor overload protection, temperature sensor malfunction protection.

3.2 Features of Slim Duct Type Indoor Unit

- High-efficiency DC brushless motor is used. Its efficiency is improved by over 30%compared with common motor. Evaporator flow path adopts simulating optimized design via the refrigeration system simulation software, which has greatly increased the heat exchange capacity of evaporator.
- Slim & Small.
- The unit is only 200mm's thick and 450 mm's deep. Suspended ceiling doesn't have to be very high. It is suitable for ordinary rooms.
- Wiring of Electric Control Box.
- Mounting board of electric control box elements are arranged at both sides of the mounting board of fan motor. There is a wire-cross notch on each side so that wiring at both sides of the mounting board of fan motor is convenient and efficient. Strong and weak current are also separated to ensure the effectiveness of week current signal transmission.
- Protection Functions.
- Anti - freezing protection, fan motor built-in overload protection, temperature sensor protection.
- Ultra-quiet.
- High-efficiency centrifugal fan and ultralow noise volute are developed with ANSYS and Fluent. They have also gained national patents. Meanwhile, inlet mute valve is adopted so that noise of the complete unit is greatly reduced.
- Fast & Strong.
- Intelligent temperature control technology is adopted. Cooling/ Heating function is fast and strong so that room temperature can quickly reach set temperature.
- Flexible Installation.
- Based on the requirements of building and utilization, different ways of air return and different air supply static pressure can be selected.
- CAN Bus Communication Technology.

- System response speed is faster and communication is more reliable. Auto addressing, non-polar communication, free wire matching.
- Convenient Operation & Maintenance.
- Electric control box is attached independently so that it can be detached as a whole, which is convenient for fan and motor is also convenient.

3.3 Features of Four-way Cassette Type Indoor Unit

- Strong and balanced airflow.

Unit features auto operation, 4-way airflow, 7 fan speeds and strong circulating airflow.

- DC inverter motor.

With good speed regulation performance, motor efficiency improved by 30% vs. normal motor.

- Ultra-low noise operation.

DC inverter motor can realize stepless speed regulation to lower noise. Indoor unit can be set to work under auto quiet mode via wired controller.

- Protection function.

Water overflow protection, anti-freezing protection, temperature sensor malfunction protection, fan motor overload protection.

- Intelligent drainage device.

Water height difference up to 1.0m, which can effectively drain out condensing water and save space.

3.4 Features of Wall Mounted Type Indoor Unit

- Filter can be cleaned.

The filter is removable and can be cleaned for easy maintenance.

- Quiet design.

High-efficiency cross flow blade and imported silence valve are adopted, which greatly reduce the noise of entire unit.

- One IDU with several wired controller and several IDUs with one wired controller.

One IDU can be connected with several wired controllers in order to control one IDU from different location; meanwhile, several IDUs can be connected with one wired controller in order to achieve centralized control of 16 IDUs in maximum.

- Wide air supply range.

The air supply range is wide, so that the wind can be delivered to each corner of the room naturally and evenly.

- Super cooling and heating function.

Intelligent temperature control technology is adopted with super cooling and heating function, so that the room temperature can reach set temperature rapidly.

- I-feel function.

When I-feel function is activated, the unit can detect the temperature around the user and adjust the temperature, so that the comfort of user is improved (Remote controller shall be equipped).

- Panel is removable.

The panel of indoor unit can be removed easily for convenient maintenance.

The response of the system is quicker with more reliable communication; auto addressing, non-polar communication and free wiring are available.

- Multiple protections.

Anti-freezing protection, temperature sensor malfunction protection, fan motor overload protection.

3.5 Features of Console Type Indoor Unit

- Multiple fan speed.

The fan can operate in multiple speed and satisfy different air flow volume requirements.

- Detachable grille and long life filter.

Grille is detachable for easy cleaning. With long life filter, cleaning cycle is 20 times longer.

- Protection function.

Anti-freezing protection, fan motor overload protection, temperature sensor malfunction protection, auxiliary electric heating overheat protection (This function is not included in pure heat pump unit).

3.6 Features of High Static Pressure Duct Type Indoor Unit

- High static pressure design.

Static pressure can be up to 150Pa, especially suitable for places in need of long distance airflow.

- Convenient installation

You can choose circular air duct or rectangular air duct according to actual needs. Or you can choose different ways of air return.

- Easy maintenance.

The system has maintenance port for easy maintenance.

- Protection function.

Anti-freezing protection, fan motor overload protection, temperature sensor malfunction protection.

3.7 Features of Two-way Cassette Type Indoor Unit

GMV-ND**TS/A-T(U):

- Beautiful Appearance.

With beautiful and elegant front panel, it is congenial to the indoor surroundings.

- Two-way air flow design.

Two-way air outlet, to stretch air outlet distance and solve air supply problem of elongated room.

- Intelligent drainage device.

Water height difference up to 1.0m, which can effectively drain out condensing water and save space.

- Multiple protections.

Anti-freezing protection, temperature malfunction protection, fan motor overload and humidity sensor protection.

GMV-ND**TS/B-T(U):

- Two-way air supply

  The double-sided air outlet lengthens the air supply distance to solve the problem of difficult air supply in narrow and long rooms.

- New streamlined appearance design.

  The new generation of two-way cassette unit adopts a brand new front panel design, making it visually pleasing and perfectly fit into indoor decoration.

- Independent swing control.

  There are two air deflectors that can be controlled independently to adjust the air supply direction. They can make different combinations of air swing angles to avoid direct airflow to people.

  *It must be used with the wired controller (XE70-33/H).

- Automatic louver control.

  The front panel adopts an arc design for the end of air deflectors. With structural simulation analysis,the best air supply angle was simulated. In cooling mode, the unit can achieve horizontal air supply. In heating mode, it can achieve vertical air supply.

- Standard fitting 1200mm（47-1/4inch） condensate water lift pump.
- Quiet fan blade design, low noise operation.
- Compact body design.

3.8 Features of Floor Ceiling Type Indoor Unit

- Hoisted or seated, flexible installation.

Unit can be hoisted or seated. When seated, suspended ceiling is not needed.

- Protection function.

Anti-freezing protection, temperature sensor malfunction protection, fan motor overload protection.

- Beautiful appearance

With beautiful and elegant front panel, it is congenial to the indoor surroundings.

- Horizontal and vertical air swing.

Wider air swing range for your comfortable working and living environment.

3.9 Features of Fresh air Processing Type Indoor Unit

- Fresh Air Processing Indoor Unit

Airflow volume: 589CFM~2060CFM.

Applicable range: Residential houses, villas, business buildings, hotels, apartments, etc…

- One system, two functions.

Adopted with DC inverter technology, Fresh Air DC Inverter Multi VRF System features air conditioning function and fresh air function.

- Enjoy fresh air.
  - Airflow volume: 589CFM~2060CFM, cooling capacity: 42/48/54/72/96kBtu/h.
  - Applicable for all kinds of structure.
  - Direct evaporative cooling adopted, air conditioning fresh air can be realized accurately

and precisely.

- DC inverter technology adopted, constant humidity is enabled with less power consumption.
- Integrated system control with Gree GMV Multi VRF System.

■ Air conditioning and fresh air, two in one.

- Less investment.

  Fresh Air DC Inverter Multi VRF System can be combined with Gree GMV5. For a same room, if the same amount of fresh air is to be taken, then the cost of GMV5+Fresh air unit is equivalent to the cost of GMV+Air exchange fan.
- Less operation cost.

  Unit can control refrigerant output according to actual needs to ensure constant airflow temperature. By adjusting power output, light-load but high power operation can be avoided. Thus, operation cost can be greatly reduced.
- Less installation space.

  Save installation space for outdoor units. Especially suitable for places that have restricted installation space.

3.10 Features of Compact Four-way Cassette Type Indoor Unit

■ Compact design for easy installation

Units maintain the uniform length and width with consistent ceiling opening and panel dimension, convenient for design and installation.

■ Ultra-low noise operation

DC inverter motor can realize stepless speed regulation to lower noise. Indoor unit can be set to work under ante quiet mode via wired controller.

■ Intelligent drainage device

Water height difference up to 3.3ft. Which can effectively drain out condensing water and save space.

3.11 Features of Super High Static Pressure Duct Type Indoor Unit

■ High static pressure design.

Static pressure can be up to 275Pa(1.1 In.W.G), especially suitable for places in need of long distance airflow.

■ Convenient installation.

You can choose circular air duct or rectangular air duct according to actual needs. Or you can choose different ways of air return.

■ Easy maintenance.

The system has maintenance port for easy maintenance.

■ Protection function.

Anti-freezing protection, fan motor overload protection, temperature sensor malfunction protection.

3.12 Features of Air Handler Type Indoor Unit

GMV-ND**A/A-T(U):

- Multiple fan speed.

The fan can operate in multiple speed and satisfy different air flow volume requirements.

- DC inverter motor.

With good speed regulation performance, motor efficiency improved by 30% vs. normal motor.

- Ultra-low noise operation.

DC inverter motor can realize stepless speed regulation to lower noise. Indoor unit can be set to work under auto quiet mode via wired controller.

- Protection function.

Anti-freezing protection, fan motor overload protection, temperature sensor malfunction protection.

GMV-ND**A/B-T(U):

- High static pressure design and multiple kinds of static pressure for long distance air supply

Nine kinds of static pressure and maximum static pressure of 250Pa adopted for enabling long distance air supply, convenient for engineering application.

- Multiple kinds of electric heaters optional

Four kinds of electric heaters (5kW~15kW) can be selected for diversified engineering selection

- Flexible installation

Vertical installation and horizontal installation can be selected flexibly according to building and operation requirements.

- DC motor design, energy saving efficient operation

DC motor, achieving stepless adjustment of the speed, speed more stable.

- Multifunctional wired controller

Using large-sized design, touch the button to operate the multi-function wired controller with backlit black and white dot matrix. Cycle setting and function paging can be achieved.

3.13 Features of AHU-KIT

- Make the air handling unit is with functions and advantages of VRF products.

Connected to VRF system of air handling unit and retained the original user function and project application function of VRF system. Installation, debugging, operation and maintenance are more convenient.

- Multiple installation method for convenient project design.

The air handling unit equipped with AHU-KIT has multiple methods for connecting VRF system. It can independently connect to VRF system to compose a one-to-one proposal; it can also match with other air handling unit or general VRF indoor units to connect to the same VRF system for composing a one-to-more proposal. In this case, it is convenient for project design.

- Independent design, convenient installation.

AHU-KIT is composed by two independent boxes(electronic expansion valve and control box) and designed independently, which is convenient for installation and application.

- Error signal is connected for reliable installation and operation.

Error signal of air handling unit is connected to AHU-KIT. Where there's malfunction, the unit will stop operation, same and reliable.

3.14 Features of 1-way Cassette Type Indoor Unit

- Beautiful Appearance

With beautiful and elegant front panel, it is congenial to the indoor surroundings.

- One-way air flow design

One-way air outlet, to stretch air outlet distance and solve air supply problem of elongated room.

- Intelligent drainage device

Water height difference up to 1.0m, which can effectively drain out condensing water and save space.

- Multiple protections

Anti-freezing protection, temperature malfunction protection, fan motor overload and humidity sensor protection.

3.15 Features of General Static Pressure Duct Type Indoor Unit

- Low static pressure, low noise

Especially suitable for rooms of compact structure or small installation space.Also it provides you with a comfortable and quiet living environment.

- Convenient installation

Tab type plastic filter, detachable fan motor, independent water pump assembly, all for convenient maintenance.

- Intelligent drainage device

Water height difference up to 3.3ft. which can effectively drain out condensing water and save space.

- Protection function

Water overflow protection, anti-freezing protection, fan motor overload protection, temperature sensor malfunction protection.

3.16 Features of 360°Air Discharge Compact Cassette Type Indoor Unit

- 360° Air Supply.

360°air supply design for wide air supply range and balanced temperature distribution, more comfortable.

- Independent Swing Control.

4 swing blades can be controlled independently; multiple air supply angle combinations is available for free and humanized control, avoiding direct air blow to people.

- New Air Duct and Blade Design for Low Noise

Adopt new air duct and blade with fluid simulation design for lower noise; noise is as low as 25dB.

- DC Quiet Drainage Pump

Water height difference up to 1.2m, which can effectively drain out condensing water and save space. Adopting high-lift DC quiet type drainage pump for lower power consumption and better sound quality; the maximum lifting height is 1200mm; installation is more flexible and the drainage pipe layout is more convenient.

3.17 Features of 360°Air Discharge Cassette Type Indoor Unit

- 360° Air Supply.

360°air supply design for wide air supply range and balanced temperature distribution, more comfortable.

- Independent Swing Control.

4 swing blades can be controlled independently; multiple air supply angle combinations is available for free and humanized control, avoiding direct air blow to people.

- Ultra-low noise operation.

DC inverter motor can realize stepless speed regulation to lower noise. Indoor unit can be set to work under auto quiet mode via wired controller.

- DC Quiet Drainage Pump

Water height difference up to 1.2m, which can effectively drain out condensing water and save space. Adopting high-lift DC quiet type drainage pump for lower power consumption and better sound quality; the maximum lifting height is 1200mm; installation is more flexible and the drainage pipe layout is more convenient.

4 Specifications

4.1 Low Static Pressure Duct Type Indoor Unit

Model				GMV-ND07PLS/A-T(U)	GMV-ND09PLS/A-T(U)	GMV-ND12PLS/A-T(U)
Product Code				CM810N0080	CM810N0090	CM810N0100
Cooling Capacity			Btu/h	7500	9500	12000
			kW	2.2	2.8	3.5
Heating Capacity			Btu/h	9500	10500	13500
			kW	2.8	3.1	4
Casing Finish				Galvanized Steel plate		
Dimensions (W×D×H)	Outline		Mm	700×615×200	700×615×200	700×615×200
			inch	27-9/16×24-3/16×7-7/8	27-9/16×24-3/16×7-7/8	27-9/16×24-3/16×7-7/8
	Packaging		Mm	893×743×305	893×743×305	893×743×305
			inch	35-3/16×29-1/4×12	35-3/16×29-1/4×12	35-3/16×29-1/4×12
Net Weight			LBS	51	51	51
			Kg	23	23	23
Gross Weight			LBS	64	64	64
			kg	29	29	29
Pipe Connection	Liquid Side		mm	Φ6.35	Φ6.35	Φ6.35
			inch	Φ1/4	Φ1/4	Φ1/4
	Gas Side		mm	Φ9.52	Φ9.52	Φ12.7
			inch	Φ3/8	Φ3/8	Φ1/2
	Drain Pipe		mm	Φ25	Φ25	Φ25
			inch	Φ1	Φ1	Φ1
Power supply				1-phase 208/230V 60Hz		
Fan	Type × Quantity			Centrifugal×2	Centrifugal×2	Centrifugal×2
	Driving Mechanism			Direct-driven		
	Motor Type			BLDC		
	Motor Power Input		W	43	43	43
	Motor Running Current		A	0.3	0.3	0.3
	Airflow Rate(H/M/L)		CFM	265/235/147	265/235/147	324/265/206
			m³/h	450/400/250	450/400/250	550/450/350
	External Static Pressure	Default	In.W.G	0.06	0.06	0.06
			Pa	15	15	15
		Range	In.W.G	0~0.12	0~0.12	0~0.12
			Pa	0~30	0~30	0~30
Sound Pressure Level(H/M/L)			dB(A)	31/29/25	31/29/25	32/30/27
Heat Exchanger				Fenestrate plain film --hydrophilic film		
Air Filter				PP		
Refrigeration Control Device				EXV		
Protection Device				Fuse		

Model				GMV-ND14PLS/A-T(U)	GMV-ND18PLS/A-T(U)	GMV-ND22PLS/A-T(U)
Product Code				CM810N0120	CM810N0070	CM810N0110
Cooling Capacity			Btu/h	15000	18000	24000
			kW	4.4	5.3	7
Heating Capacity			Btu/h	17000	20000	27000
			kW	5	5.9	7.9
Casing Finish				Galvanized Steel plate		
Dimensions (W×D×H)	Outline		mm	900×615×200	1100×615×200	1100×615×200
			inch	35-7/16×24-3/16×7-7/8	43-5/16×24-3/16×7-7/8	43-5/16×24-3/16×7-7/8
	Packaging		mm	1123×743×305	1323×743×305	1323×743×305
			inch	44-3/16×29-1/4×12	52-1/16×29-1/4×12	52-1/16×29-1/4×12
Net Weight			LBS	60	69	69
			kg	27	31	31
Gross Weight			LBS	73	86	86
			kg	33	39	39
Pipe Connection	Liquid Side		mm	Φ6.35	Φ9.52	Φ9.52
			inch	Φ1/4	Φ3/8	Φ3/8
	Gas Side		mm	Φ12.7	Φ15.9	Φ15.9
			inch	Φ1/2	Φ5/8	Φ5/8
	Drain Pipe		mm	Φ25	Φ25	Φ25
			inch	Φ1	Φ1	Φ1
Power Supply				1-phase 208/230V 60Hz		
Fan	Type × Quantity			Centrifugal×3	Centrifugal×4	Centrifugal×4
	Driving Mechanism			Direct-driven		
	Motor Type			BLDC		
	Motor Power Input		W	52	99	99
	Motor Running Current		A	0.5	0.7	0.7
	Airflow Rate(H/M/L)		CFM	412/353/265	589/471/353	589/471/353
			m³/h	700/600/450	1000/800/600	1000/800/600
	External Static Pressure	Default	In.W.G	0.06	0.06	0.06
			Pa	15	15	15
		Range	In.W.G	0~0.12	0~0.12	0~0.12
			Pa	0~30	0~30	0~30
Sound Pressure Level(H/M/L)			dB(A)	33/31/28	35/33/30	35/33/30
Heat Exchanger				Fenestrate plain film --hydrophilic film		
Air Filter				PP		
Refrigeration Control Device				EXV		
Protection Device				Fuse		

Model				GMV-ND05PLS/B1-T(U)	GMV-ND07PLS/B1-T(U)	GMV-ND09PLS/B1-T(U)
Product Code				CM810N2170	CM810N2190	CM810N2180
Cooling Capacity			Btu/h	5800	7500	9500
			kW	1.7	2.2	2.8
Heating Capacity			Btu/h	6200	8500	10500
			kW	1.8	2.8	3.2
Casing Finish				Galvanized Steel plate		
Dimensions (W×D×H)	Outline		mm	710×462×200	710×462×200	710×462×200
			in.	28×18-3/16×7-7/8	28×18-3/16×7-7/8	28×18-3/16×7-7/8
	Packaging		mm	1025×570×285	1025×570×285	1025×570×285
			in.	40-1/4×22-1/3×10-5/8	40-1/4×22-1/3×10-5/8	40-1/4×22-1/3×10-5/8
Net Weight			lbs.	41	41	41
			kg	18.5	18.5	18.5
Gross Weight			lbs.	52	52	52
			kg	23.5	23.5	23.5
Pipe Connection	Liquid Side		mm	Φ6.35	Φ6.35	Φ6.35
			in.	Φ1/4	Φ1/4	Φ1/4
	Gas Side		mm	Φ9.52	Φ9.52	Φ9.52
			in.	Φ3/8	Φ3/8	Φ3/8
	Drain Pipe		mm	Φ25	Φ25	Φ25
			in.	Φ1	Φ1	Φ1
Power supply				1-phase 208/230V 60Hz		
Fan	Type * Quantity			Centrifugal*2	Centrifugal*2	Centrifugal*2
	Driving Mechanism			Direct-driven		
	Motor Type			BLDC		
	Motor Power Input		W	30	30	30
	Motor Running Current		A	0.16	0.16	0.16
	Airflow Rate(H/M/L)		CFM	265/206/118	265/206/118	265/206/118
			m³/h	450/350/200	450/350/200	450/350/200
	External Static Pressure	Default	in.W.G.	0.06	0.06	0.06
			Pa	15	15	15
		Range	in.W.G.	0~0.12	0~0.12	0~0.12
			Pa	0~30	0~30	0~30
Sound Pressure Level(H/M/L)			dB(A)	30/25/22	30/25/22	30/25/22
Heat Exchanger				Fenestrate plain film --hydrophilic film		
Air Filter				PP		
Refrigeration Control Device				EXV		
Protection Device				Fuse		

Model				GMV-ND12PLS/B1-T(U)	GMV-ND14PLS/B1-T(U)	GMV-ND18PLS/B1-T(U)	GMV-ND24PLS/B1-T(U)
Product Code				CM810N2220	CM810N2200	CM810N2210	CM810N2230
Cooling Capacity			Btu/h	12000	15000	18000	24000
			kW	3.6	4	5.6	7.1
Heating Capacity			Btu/h	13500	17500	20000	27000
			kW	4	4.5	6.3	8
Casing Finish				Galvanized Steel plate			
Dimensions (W×D×H)	Outline		mm	710×462×200	1010×462×200	1010×462×200	1310×462×200
			in.	28×18-3/16×7-7/8	39-3/4×18-3/16 ×7-7/8	39-3/4×18-3/16 ×7-7/8	51-4/7×18-3/16 ×7-7/8
	Packaging		mm	1025×570×285	1322×570×285	1625×570×285	1625×570×285
			in.	40-1/4×22-1/3 ×10-5/8	52×22-1/3×10-5/8	52×22-1/3×10-5/8	64×22-1/3×10-5/8
Net Weight			lbs.	42	55	55	68
			kg	19	25	25	31
Gross Weight			lbs.	53	68	68	83
			kg	24	31	31	37.5
Pipe Connection	Liquid Side		mm	Φ6.35	Φ6.35	Φ9.52	Φ9.52
			in.	Φ1/4	Φ1/4	Φ3/8	Φ3/8
	Gas Side		mm	Φ12.7	Φ12.7	Φ15.9	Φ15.9
			in.	Φ1/2	Φ1/2	Φ5/8	Φ5/8
	Drain Pipe		mm	Φ25	Φ25	Φ25	Φ25
			in.	Φ1	Φ1	Φ1	Φ1
Power supply				1-phase 208/230V 60Hz			
Fan	Type * Quantity			Centrifugal*2	Centrifugal*2	Centrifugal*2	Centrifugal*2
	Driving Mechanism			Direct-driven			
	Motor Type			BLDC			
	Motor Power Input		W	30	30	60	80
	Motor Running Current		A	0.16	0.16	0.29	0.3
	Airflow Rate(H/M/L)		CFM	324/235/177	441/324/235	500/412/324	647/500/383
			m³/h	550/400/300	750/550/400	850/700/550	1100/850/650
	External Static Pressure	Default	in.W.G.	0.06	0.06	0.06	0.06
			Pa	15	15	15	15
		Range	in.W.G.	0~0.12	0~0.12	0~0.12	0~0.12
			Pa	0~30	0~30	0~30	0~30
Sound Pressure Level(H/M/L)			dB(A)	31/27/25	33/29/27	35/31/29	37/32/30
Heat Exchanger				Fenestrate plain film --hydrophilic film			
Air Filter				PP			
Refrigeration Control Device				EXV			
Protection Device				Fuse			

4.2 Slim Duct Type Indoor Unit

Model				GMV-ND06PLS/B-T(U)	GMV-ND07PLS/B-T(U)	GMV-ND09PLS/B-T(U)	GMV-ND12PLS/B-T(U)
Product Code				CM810N1980	CM810N1720	CM810N1710	CM810N1700
Cooling Capacity			Btu/h	6000	7500	9500	12000
			kW	1.8	2.2	2.8	3.6
Heating Capacity			Btu/h	6000	8500	10500	13500
			kW	1.8	2.8	3.2	4
Casing Finish				Galvanized Steel plate			
Dimensions (W×D×H)	Outline		mm	710×462×200	710×462×200	710×462×200	710×462×200
			inch	27-15/16×18-3/16 ×7-14/16	27-15/16×18-3/16 ×7-14/16	27-15/16×18-3/16 ×7-14/16	27-15/16×18-3/16 ×7-14/16
	Packaging		mm	1025×570×285	1025×570×285	1025×570×285	1025×570×285
			inch	40-4/16×22-5/16 ×10-10/16	40-4/16×22-5/16 ×10-10/16	40-4/16×22-5/16 ×10-10/16	40-4/16×22-5/16 ×10-10/16
Net Weight			LBS	41	41	41	42
			kg	18.5	18.5	18.5	19
Gross Weight			LBS	52	52	52	53
			kg	23.5	23.5	23.5	24
Pipe Connection	Liquid Side		mm	Φ6.35	Φ6.35	Φ6.35	Φ6.35
			inch	Φ1/4	Φ1/4	Φ1/4	Φ1/4
	Gas Side		mm	Φ9.52	Φ9.52	Φ9.52	Φ12.7
			inch	Φ3/8	Φ3/8	Φ3/8	Φ1/2
	Drain Pipe		mm	Φ25	Φ25	Φ25	Φ25
			inch	Φ1	Φ1	Φ1	Φ1
Power supply				1-phase 208/230V 60Hz			
Fan	Type × Quantity			Centrifugal×2	Centrifugal×2	Centrifugal×2	Centrifugal×2
	Driving Mechanism			Direct-driven			
	Motor Type			BLDC			
	Motor Power Input		W	30	30	30	30
	Motor Running Current		A	0.16	0.16	0.16	0.16
	Airflow Rate(H/M/L)		CFM	265/206/118	265/206/118	265/206/118	324/235/177
			m³/h	450/350/200	450/350/200	450/350/200	550/400/300
	External Static Pressure	Default	In.W.G	0.06	0.06	0.06	0.06
			Pa	15	15	15	15
		Range	In.W.G	0~0.12	0~0.12	0~0.12	0~0.12
			Pa	0~30	0~30	0~30	0~30
Sound Pressure Level(H/M/L)			dB(A)	30/25/22	30/25/22	30/25/22	30/25/22
Heat Exchanger				Fenestrate plain film --hydrophilic film			
Air Filter				PP			
Refrigeration Control Device				EXV			
Protection Device				Fuse			

Model				GMV-ND14PLS/B-T(U)	GMV-ND18PLS/B-T(U)	GMV-ND24PLS/A-T(U)
Product Code				CM810N1690	CM810N1680	CM810N1670
Cooling Capacity			Btu/h	15000	18000	24000
			kW	4	5.6	7.1
Heating Capacity			Btu/h	17000	20000	27000
			kW	4.5	6.3	8
Casing Finish				Galvanized Steel plate		
Dimensions (W×D×H)	Outline		mm	1010×462×200	1010×462×200	1310×462×200
			inch	39-12/16×18-3/16 ×7-14/16	39-12/16×18-3/16 ×7-14/16	51-9/16×18-3/16 ×7-14/16
	Packaging		mm	1322×570×285	1625×570×285	1625×570×285
			inch	52-1/16×22-5/16 ×10-10/16	52-1/16×22-5/16 ×10-10/16	64×22-5/16×10-10/16
Net Weight			LBS	55	55	68
			kg	25	25	31
Gross Weight			LBS	68	68	83
			kg	31	31	37.5
Pipe Connection	Liquid Side		mm	Φ6.35	Φ9.52	Φ9.52
			inch	Φ1/4	Φ3/8	Φ3/8
	Gas Side		mm	Φ12.7	Φ15.9	Φ15.9
			inch	Φ1/2	Φ5/8	Φ5/8
	Drain Pipe		mm	Φ25	Φ25	Φ25
			inch	Φ1	Φ1	Φ1
Power supply				1-phase 208/230V 60Hz		
Fan	Type × Quantity			Centrifugal×2	Centrifugal×2	Centrifugal×2
	Driving Mechanism			Direct-driven		
	Motor Type			BLDC		
	Motor Power Input		W	30	60	80
	Motor Running Current		A	0.16	0.29	0.3
	Airflow Rate(H/M/L)		CFM	441/324/235	500/412/324	647/500/383
			m³/h	750/550/400	850/700/550	1100/850/650
	External Static Pressure	Default	In.W.G	0.06	0.06	0.06
			Pa	15	15	15
		Range	In.W.G	0~0.12	0~0.12	0~0.12
			Pa	0~30	0~30	0~30
Sound Pressure Level(H/M/L)			dB(A)	33/29/27	35/31/29	37/32/30
Heat Exchanger				Fenestrate plain film --hydrophilic film		
Air Filter				PP		
Refrigeration Control Device				EXV		
Protection Device				Fuse		

4.3 Four-way Cassette Type Indoor Unit

Model			GMV-ND07T/A-T(U)	GMV-ND09T/A-T(U)	GMV-ND12T/A-T(U)	GMV-ND15T/A-T(U)	GMV-ND18T/A-T(U)
Product Code			CM500N0520	CM500N0530	CM500N0540	CM500N0670	CM500N0510
Cooling Capacity		Btu/h	7500	9500	12000	15000	18000
		kW	2.2	2.8	3.5	4.4	5.3
Heating Capacity		Btu/h	8500	10500	13500	17000	20000
		kW	2.5	3.1	4.0	5	5.9
Casing Finish			Galvanized Steel plate				
Dimensions (W×D×H)	Body Outline	mm	840×840×190	840×840×240	840×840×240	840×840×240	840×840×240
		inch	33×33×7-1/2	33×33×9-1/2	33×33×9-1/2	33×33×9-1/2	33×33×9-1/2
	Body Packaging	mm	963×963×272	963×963×325	963×963×325	963×963×325	963×963×325
		inch	37-15/16 ×37-15/16 ×10-11/16	37-15/16 ×37-15/16 ×12-13/16	37-15/16 ×37-15/16 ×12-13/16	37-15/16 ×37-15/16 ×12-13/16	37-15/16 ×37-15/16 ×12-13/16
	Panel Outline	mm	950×950×65	950×950×65	950×950×65	950×950×65	950×950×65
		inch	37-3/8×37-3/8 ×2-1/2	37-3/8×37-3/8 ×2-1/2	37-3/8×37-3/8 ×2-1/2	37-3/8×37-3/8 ×2-1/2	37-3/8×37-3/8 ×2-1/2
	Panel Packaging	mm	1033×1038 ×133	1033×1038 ×133	1033×1038 ×133	1033×1038 ×133	1033×1038 ×133
		inch	40-11/16 ×40-7/8×5-1/4	40-11/16 ×40-7/8×5-1/4	40-11/16 ×40-7/8×5-1/4	40-11/16 ×40-7/8×5-1/4	40-11/16× 40-7/8×5-1/4
Net Weigh	Main Body	LBS	50	58	58	58	58
		kg	22.5	26.5	26.5	26.5	26.5
	Panel	LBS	15	15	15	15	15
		kg	7	7	7	7	7
Gross Weigh	Main Body	LBS	64	75	75	75	75
		kg	29	34	34	34	34
	Panel	LBS	24	24	24	24	24
		kg	11	11	11	11	11
Pipe Connections	Liquid Side	mm	Φ6.35	Φ6.35	Φ6.35	Φ6.35	Φ9.52
		inch	Φ1/4	Φ1/4	Φ1/4	Φ1/4	Φ3/8
	Gas Side	mm	Φ9.52	Φ9.52	Φ12.7	Φ12.7	Φ15.9
		inch	Φ3/8	Φ3/8	Φ1/2	Φ1/2	Φ5/8
	Drain Pipe	mm	Φ25	Φ25	Φ25	Φ25	Φ25
		inch	Φ1	Φ1	Φ1	Φ1	Φ1
Power supply			1-phase 208/230V 60Hz				
Fan	Type × Quantity		Centrifugal×1	Centrifugal×1	Centrifugal×1	Centrifugal×1	Centrifugal×1
	Driving Mechanism		Direct-driven	Direct-driven	Direct-driven	Direct-driven	Direct-driven
	Motor Type		BLDC	BLDC	BLDC	BLDC	BLDC
	Motor Power Input	W	48	59	59	59	59
	Motor Running Current	A	0.3	0.5	0.5	0.5	0.5
	Airflow Rate(H/M/L)	CFM	440/385/325	590/530/440	590/530/440	590/530/440	590/530/440
		m³/h	750/650/550	1000/900/750	1000/900/750	1000/900/750	1000/900/750
Sound Pressure Level(H/M/L)		dB(A)	36/34/31	37/35/32	37/35/32	37/35/32	37/35/32
Heat Exchanger			Fenestrate plain film --hydrophilic film				
Air Filter			PP	PP	PP	PP	PP
Insulation Material			Foamed polystyrene	Foamed polystyrene	Foamed polystyrene	Foamed polystyrene	Foamed polystyrene
Refrigeration Control Device			EXV	EXV	EXV	EXV	EXV

Model	GMV-ND07T/A-T(U)	GMV-ND09T/A-T(U)	GMV-ND12T/A-T(U)	GMV-ND15T/A-T(U)	GMV-ND18T/A-T(U)
Protection Device	Fuse	Fuse	Fuse	Fuse	Fuse
Panel Name	TC01	TC01	TC01	TC01	TC01

Model			GMV-ND24T/A-T(U)	GMV-ND30T/A-T(U)	GMV-ND36T/A-T(U)	GMV-ND42T/A-T(U)	GMV-ND48T/A-T(U)
Product Code			CM500N0550	CM500N0560	CM500N0570	CM500N0580	CM500N0590
Cooling Capacity		Btu/h	24000	30000	36000	42000	48000
		kW	7	8.8	10.6	12.3	14.1
Heating Capacity		Btu/h	27000	34000	40000	47000	54000
		kW	7.9	10	11.7	13.8	15.8
Casing Finish			Galvanized Steel plate				
Dimensions (W×D×H)	Body Outline	mm	840×840×240	840×840×320	840×840×320	840×840×320	840×840×320
		inch	33×33×9-1/2	33×33×12-5/8	33×33×12-5/8	33×33×12-5/8	33×33×12-5/8
	Body Packaging	mm	963×963×325	963×963×409	963×963×409	963×963×409	963×963×409
		inch	37-15/16 ×37-15/16 ×12-13/16	37-15/16 ×37-15/16 ×16-1/8	37-15/16 ×37-15/16 ×16-1/8	37-15/16 ×37-15/16 ×16-1/8	37-15/16 ×37-15/16 ×16-1/8
	Panel Outline	mm	950×950×65	950×950×65	950×950×65	950×950×65	950×950×65
		inch	37-3/8×37-3/8 ×2-1/2	37-3/8×37-3/8 ×2-1/2	37-3/8×37-3/8 ×2-1/2	37-3/8×37-3/8 ×2-1/2	37-3/8×37-3/8 ×2-1/2
	Panel Packaging	mm	1033×1038 ×133	1033×1038 ×133	1033×1038 ×133	1033×1038 ×133	1033×1038 ×133
		inch	40-11/16 ×40-7/8×5-1/4	40-11/16 ×40-7/8×5-1/4	40-11/16 ×40-7/8×5-1/4	40-11/16 ×40-7/8×5-1/4	40-11/16 ×40-7/8×5-1/4
Net Weight	Main Body	LBS	58	72	72	72	72
		kg	26.5	32.5	32.5	32.5	32.5
	Panel	LBS	15	15	15	15	15
		kg	7	7	7	7	7
Gross Weight	Main Body	LBS	75	88	88	88	88
		kg	34	40	40	40	40
	Panel	LBS	24	24	24	24	24
		kg	11	11	11	11	11
Pipe Connections	Liquid Side	mm	Φ9.52	Φ9.52	Φ9.52	Φ9.52	Φ9.52
		inch	Φ3/8	Φ3/8	Φ3/8	Φ3/8	Φ3/8
	Gas Side	mm	Φ15.9	Φ15.9	Φ15.9	Φ15.9	Φ15.9
		inch	Φ5/8	Φ5/8	Φ5/8	Φ5/8	Φ5/8
	Drain Pipe	mm	Φ25	Φ25	Φ25	Φ25	Φ25
		inch	Φ1	Φ1	Φ1	Φ1	Φ1
Power Supply			1-phase 208/230V 60Hz				
Fan	Type × Quantity		Centrifugal×1	Centrifugal×1	Centrifugal×1	Centrifugal×1	Centrifugal×1
	Driving Mechanism		Direct-driven	Direct-driven	Direct-driven	Direct-driven	Direct-driven
	Motor Type		BLDC	BLDC	BLDC	BLDC	BLDC
	Motor Power Input	W	68	98	110	110	110
	Motor Running Current	A	0.5	0.8	0.9	0.9	0.9
	Airflow Rate(H/M/L)	CFM	695/590/470	885/795/650	1000/825/650	1095/885/680	1095/885/680
		m³/h	1180/1000/800	1500/1350 /1100	1700/1400 /1100	1860/1500 /1150	1860/1500 /1150
Sound Pressure Level(H/M/L)		dB(A)	38/36/33	40/38/35	41/38/36	43/41/38	43/41/38
Heat Exchanger			Fenestrate plain film --hydrophilic film				

Model	GMV-ND24T/A-T(U)	GMV-ND30T/A-T(U)	GMV-ND36T/A-T(U)	GMV-ND42T/A-T(U)	GMV-ND48T/A-T(U)
Air Filter	PP	PP	PP	PP	PP
Insulation Material	Foamed polystyrene	Foamed polystyrene	Foamed polystyrene	Foamed polystyrene	Foamed polystyrene
Refrigeration Control Device	EXV	EXV	EXV	EXV	EXV
Protection Device	Fuse	Fuse	Fuse	Fuse	Fuse
Panel Name	TC01	TC01	TC01	TC01	TC01

4.4 Wall Mounted Type Indoor Unit

Model			GMV-N07G/A3A-D(U)	GMV-N09G/A3A-D(U)	GMV-N12G/A3A-D(U)	GMV-N18G/A3A-D(U)	GMV-N24G/A3A-D(U)
Product Code			CM100N1480	CM100N1490	CM100N1500	CM100N1510	CM100N1520
Cooling Capacity		Btu/h	7500	9500	12000	18000	24000
		kW	2.2	2.8	3.5	5.2	7
Heating Capacity		Btu/h	8500	11000	13500	20000	25500
		kW	2.5	3.2	4	5.8	7.5
Casing Finish			Galvanized Steel plate				
Dimensions (W×D×H)	Outline	mm	843×180×275	843×180×275	940×200×298	940×200×298	1008×221×319
		inch	33-3/16 ×7-1/16 ×10-13/16	33-3/16 ×7-1/16 ×10-13/16	37×7-7/8 ×11-3/4	37×7-7/8 ×11-3/4	37×7-7/8 ×11-3/4
	Packaging	mm	973×258×370	973×258×370	1068×288×395	1068×288×395	1131×398×328
		inch	38-5/16 ×10-3/16 ×14-9/16	38-5/16 ×10-3/16 ×14-9/16	42-1/16 ×11-5/16 ×15-9/16	42-1/16 ×11-5/16 ×15-9/16	42-1/16 ×11-5/16 ×15-9/16
Net Weight		LBS	22.1	22.1	27.6	27.6	33.1
		kg	10	10	12.5	12.5	15
Gross Weight		LBS	27.6	27.6	34.2	34.2	40.8
		kg	12.5	12.5	15.5	15.5	18.5
Pipe Connections	Liquid Side	mm	Φ6.35	Φ6.35	Φ6.35	Φ6.35	Φ9.52
		inch	Φ1/4	Φ1/4	Φ1/4	Φ1/4	Φ3/8
	Gas Side	mm	Φ9.52	Φ9.52	Φ12.7	Φ12.7	Φ15.9
		inch	Φ3/8	Φ3/8	Φ1/2	Φ1/2	Φ5/8
	Drain Pipe	mm	Φ20	Φ20	Φ20	Φ20	Φ30
		inch	Φ4/5	Φ4/5	Φ4/5	Φ4/5	Φ1 1/6
Power supply			1-phase 208/230V 60Hz				
Fan	Type × Quantity		Cross-flow×1	Cross-flow×1	Cross-flow×1	Cross-flow×1	Cross-flow×1
	Driving Mechanism		Direct-driven				
	Motor Type		PG				
	Motor Power Input	W	50	50	60	60	70
	Motor Running Current	A	0.2	0.2	0.21	0.21	0.31
	Airflow Rate(H/M/L)	CFM	295/247/206	295/247/206	370/324/283	370/324/283	440/353/294
		m³/h	500/420/350	500/420/350	630/550/480	630/550/480	750/600/500
Sound Pressure Level(H/M/L)		dB(A)	38/34/30	38/34/30	44/41/38	44/41/38	44/41/38
Heat Exchanger			Fenestrate plain film -- hydrophilic film				
Air Filter			PP+10%BCM+FP03				
Insulation Material			Foamed polystyrene				
Refrigeration Control Device			EXV				
Protection Device			Fuse				

Model			GMV-N07G/E 3A-D(U)	GMV-N09G/E 3A-D(U)	GMV-N12G/E 3A-D(U)	GMV-N18G/E 3A-D(U)	GMV-N24G/E 3A-D(U)
Product Code			CM100N2330	CM100N2340	CM100N2350	CM100N2360	CM100N2370
Cooling Capacity		Btu/h	7500	9500	12000	18000	24000
		kW	2.2	2.8	3.5	5.2	7
Heating Capacity		Btu/h	8500	11000	13500	20000	25500
		kW	2.5	3.2	4	5.8	7.5
Casing Finish			Galvanized Steel plate				
Dimensions (W×D×H)	Outline	mm	843×180×275	843×180×275	940×200×298	940×200×298	1008×221×319
		inch	33-3/16×7-1/16×10-13/16	33-3/16×7-1/16×10 3/16	37×7-7/8×11-3/4	37×7-7/8 ×11-3/4	37×7-7/8 ×11-3/4
	Packaging	mm	973×258×370	973×258×370	1068×288×395	1068×288×395	1131×398×328
		inch	38-5/16 ×10-3/16 ×14-9/16	38-5/16 ×10-3/16 ×14-9/16	42-1/16 ×11-5/16 ×15-9/16	42-1/16 ×11-5/16 ×15-9/16	42-1/16 ×11-5/16 ×15-9/16
Net Weight		LBS	22.1	22.1	27.6	27.6	33.1
		kg	10	10	12.5	12.5	15
Gross Weight		LBS	27.6	27.6	34.2	34.2	40.8
		kg	12.5	12.5	15.5	15.5	18.5
Pipe Connections	Liquid Side	mm	Φ6.35	Φ6.35	Φ6.35	Φ6.35	Φ9.52
		inch	Φ1/4	Φ1/4	Φ1/4	Φ1/4	Φ3/8
	Gas Side	mm	Φ9.52	Φ9.52	Φ12.7	Φ12.7	Φ15.9
		inch	Φ3/8	Φ3/8	Φ1/2	Φ1/2	Φ5/8
	Drain Pipe	mm	Φ20	Φ20	Φ20	Φ20	Φ30
		inch	Φ4/5	Φ4/5	Φ4/5	Φ4/5	Φ1 1/6
Power supply			1-phase 208/230V 60Hz				
Fan	Type × Quantity		Cross-flow×1	Cross-flow×1	Cross-flow×1	Cross-flow×1	Cross-flow×1
	Driving Mechanism		Direct-driven				
	Motor Type		PG				
	Motor Power Input	W	50	50	60	60	70
	Motor Running Current	A	0.2	0.2	0.21	0.21	0.31
	Airflow Rate(H/M/L)	CFM	295/247/206	295/247/206	370/324/283	370/324/283	440/353/294
		m³/h	500/420/350	500/420/350	630/550/480	630/550/480	750/600/500
Sound Pressure Level(H/M/L)		dB(A)	38/34/30	38/34/30	44/41/38	44/41/38	44/41/38
Heat Exchanger			Fenestrate plain film -- hydrophilic film				
Air Filter			PP+10%BCM+FP03				
Insulation Material			Foamed polystyrene				
Refrigeration Control Device			EXV				
Protection Device			Fuse				

Model			GMV-ND06G/B4B-T(U)	GMV-ND07G/B4B-T(U)	GMV-ND09G/B4B-T(U)	GMV-ND12G/B4B-T(U)	GMV-ND14G/B4B-T(U)
Product Code			CM100N2950	CM100N2960	CM100N2970	CM100N2980	CM100N2990
Cooling Capacity		Btu/h	6000	7500	9500	12000	15000
		kW	1.8	2.2	2.8	3.5	4.4
Heating Capacity		Btu/h	6000	8500	10500	13500	17000
		kW	1.8	2.5	3.2	4.0	5.0
Casing Finish			Galvanized Steel plate				
Dimensions (W×D×H)	Outline	mm	845×209×289	845×209×289	845×209×289	845×209×289	970×300×224
		inch	33-1/4×8-1/4 ×11-3/8	33-1/4×8-1/4 ×11-3/8	33-1/4×8-1/4 ×11-3/8	33-1/4×8-1/4 ×11-3/8	38-3/16×11-13/16×8-13/16
	Packaging	mm	976×281×379	976×281×379	976×281×379	976×281×379	1096×383×320
		inch	38-7/16 ×11-1/16 ×14-15/16	38-7/16 ×11-1/16 ×14-15/16	38-7/16 ×11-1/16 ×14-15/16	38-7/16 ×11-1/16 ×14-15/16	43-1/8 ×15-1/16 ×12-5/8
Net Weight		LBS	23.5	23.5	23.5	23.5	27.5
		kg	10.5	10.5	10.5	10.5	12.5
Gross Weight		LBS	27.5	27.5	27.5	27.5	34.5
		kg	12.5	12.5	12.5	12.5	15.5
Pipe Connections	Liquid Side	mm	Φ6.35	Φ6.35	Φ6.35	Φ6.35	Φ6.35
		inch	Φ1/4	Φ1/4	Φ1/4	Φ1/4	Φ1/4
	Gas Side	mm	Φ9.52	Φ9.52	Φ9.52	Φ12.7	Φ12.7
		inch	Φ3/8	Φ3/8	Φ3/8	Φ1/2	Φ1/2
	Drain Pipe	mm	Φ20	Φ20	Φ20	Φ20	Φ20
		inch	Φ13/16	Φ13/16	Φ13/16	Φ13/16	Φ13/16
Power supply			1-phase 208/230V 60Hz				
Fan	Type × Quantity		Cross-flow×1	Cross-flow×1	Cross-flow×1	Cross-flow×1	Cross-flow×1
	Driving Mechanism		Direct-driven				
	Motor Type		BLDC				
	Motor Power Input	W	20	20	20	25	35
	Motor Running Current	A	0.1	0.1	0.1	0.12	0.17
	Airflow Rate(H/M/L)	CFM	294/259/177	294/259/177	294/259/177	371/271/188	500/341/294
		m³/h	500/440/300	500/440/300	500/440/300	630/460/320	850/580/500
Sound Pressure Level(H/M/L)		dB(A)	35/33/30	35/33/30	35/33/30	38/35/31	43/40/37
Heat Exchanger			Fenestrate plain film -- hydrophilic film				
Air Filter			PP+PP MD10				
Insulation Material			Foamed polystyrene				
Refrigeration Control Device			EXV				
Protection Device			Fuse				

Model			GMV-ND18G/B4B-T(U)	GMV-ND24G/B4B-T(U)	GMV-ND30G/B4B-T(U)	GMV-ND36G/B4B-T(U)
Product Code			CM100N3000	CM100N3010	CM100N3020	CM100N3030
Cooling Capacity		Btu/h	18000	24000	30000	32500
		kW	5.2	7.0	8.8	9.5
Heating Capacity		Btu/h	20000	25500	34000	36000
		kW	5.8	7.5	10.0	10.5
Casing Finish			Galvanized Steel plate			
Dimensions (W×D×H)	Outline	mm	1078×325×246	1078×325×246	1350×258×326	1350×258×326
		inch	42-7/16×12-13/16 ×9-11/16	42-7/16×12-13/16 ×9-11/16	53-1/8×10-3/16 ×12-13/16	53-1/8×10-3/16 ×12-13/16
	Packaging	mm	1203×413×350	1203×413×350	1496×421×369	1496×421×369
		inch	47-3/8×16-1/4 ×13-3/4	47-3/8×16-1/4 ×13-3/4	58-7/8×16-9/16 ×14-1/2	58-7/8×16-9/16 ×14-1/2
Net Weight		LBS	35.5	35.5	41	41
		kg	16	16	18.5	18.5
Gross Weight		LBS	42	42	52	52
		kg	19	19	23.5	23.5
Pipe Connections	Liquid Side	mm	Φ9.52	Φ9.52	Φ9.52	Φ9.52
		inch	Φ3/8	Φ3/8	Φ3/8	Φ3/8
	Gas Side	mm	Φ15.9	Φ15.9	Φ15.9	Φ15.9
		inch	Φ5/8	Φ5/8	Φ5/8	Φ5/8
	Drain Pipe	mm	Φ20	Φ20	Φ20	Φ20
		inch	Φ13/16	Φ13/16	Φ13/16	Φ13/16
Power supply			1-phase 208/230V 60Hz			
Fan	Type × Quantity		Cross-flow×1	Cross-flow×1	Cross-flow×1	Cross-flow×1
	Driving Mechanism		Direct-driven			
	Motor Type		BLDC			
	Motor Power Input	W	50	65	80	100
	Motor Running Current	A	0.24	0.31	0.41	0.41
	Airflow Rate(H/M/L)	CFM	647/500/383	706/500/383	912/618/471	971/647/530
		m³/h	1100/850/650	1200/850/650	1550/1050/800	1650/1100/900
Sound Pressure Level(H/M/L)		dB(A)	43/41/37	44/41/37	49/46/40	52/48/40
Heat Exchanger			Fenestrate plain film -- hydrophilic film			
Air Filter			PP+PP MD10			
Insulation Material			Foamed polystyrene			
Refrigeration Control Device			EXV			
Protection Device			Fuse			

4.5 Console Type Indoor Unit

Model			GMV-ND07C/A-T(U)	GMV-ND09C/A-T(U)	GMV-ND12C/A-T(U)	GMV-ND18C/A-T(U)
Product Code			CM400N0110	CM400N0120	CM400N0100	CM400N0130
Cooling Capacity		Btu/h	7500	9500	12000	18000
		kW	2.2	2.8	3.5	5.3
Heating Capacity		Btu/h	8500	11000	13500	20000
		kW	2.5	3.2	4	5.8
Casing Finish			Galvanized Steel plate			
Dimensions (W×D×H)	Outline	mm	700×215×600	700×215×600	700×215×600	700×215×600
		inch	27-9/16×8-1/2 ×23-5/8	27-9/16×8-1/2 ×23-5/8	27-9/16×8-1/2 ×23-5/8	27-9/16×8-1/2 ×23-5/8
	Packaging	mm	785×280×762	785×280×762	785×280×762	785×280×762
		inch	31×11×30	31×11×30	31×11×30	31×11×30
Net Weight		LBS	35	35	35	35
		kg	16	16	16	16
Gross Weight		LBS	42	42	42	42
		kg	19	19	19	19
Pipe Connections	Liquid Side	mm	Φ6.35	Φ6.35	Φ6.35	Φ6.35
		inch	Φ1/4	Φ1/4	Φ1/4	Φ1/4
	Gas Side	mm	Φ9.52	Φ9.52	Φ12.7	Φ12.7
		inch	Φ3/8	Φ3/8	Φ1/2	Φ1/2
	Drain Pipe	mm	Φ28	Φ28	Φ28	Φ28
		inch	Φ1-1/9	Φ1-1/9	Φ1-1/9	Φ1-1/9
Power Supply			1-phase 208/230V 60Hz			
Fan	Type × Quantity		Centrifugal×1	Centrifugal×1	Centrifugal×1	Centrifugal×1
	Driving Mechanism		Direct-driven			
	Motor Type		BLDC			
	Motor Power Input	W	38	38	38	38
	MotorA Running Current	A	0.4	0.4	0.4	0.4
	Airflow Rate(H/M/L)	CFM	235	235	282	400
		m³/h	400	400	480	680
Sound Pressure Level(H/M/L)		dB(A)	38	38	40	46
Heat Exchanger			Fenestrate plain film -- hydrophilic film			
Air Filter			PP			
Insulation Material			Foamed polystyrene			
Refrigeration Control Device			EXV			
Protection Device			Fuse			

4.6 High Static Pressure Duct Type Indoor Unit

Model				GMV-ND18 PHS/A-T(U)	GMV-ND24 PHS/A-T(U)	GMV-ND30 PHS/A-T(U)	GMV-ND36 PHS/A-T(U)	GMV-ND42 PHS/A-T(U)	GMV-ND48 PHS/A-T(U)
Product Code				CM810N0140	CM810N0150	CM810N0160	CM810N0170	CM810N0180	CM810N0190
Cooling Capacity			Btu/h	18000	24000	30000	36000	42000	48000
			kW	5.3	7.0	8.8	10.6	12.3	14.1
Heating Capacity			Btu/h	20000	27000	34000	40000	47000	54000
			kW	5.9	7.9	10	11.7	13.8	15.8
Casing Finish				Galvanized Steel plate					
Dimensions (W×D×H)	Outline		mm	1271×558×268	1271×558×268	1229×775×290	1229×775×290	1229×775×290	1229×775×290
			inch	50×22×10-1/2	50×22×10-1/2	48-3/8×30-1/2×11-3/8	48-3/8×30-1/2×11-3/8	48-3/8×30-1/2×11-3/8	48-3/8×30-1/2×11-3/8
	Packaging		mm	1348×597×283	1348×597×283	1338×877×305	1338×877×305	1338×877×305	1338×877×305
			inch	53-1/16×23-3/8×11-1/8	53-1/16×23-3/8×11-1/8	52-11/16×34-1/2×12	52-11/16×34-1/2×12	52-11/16×34-1/2×12	52-11/16×34-1/2×12
Net Weight			LBS	77	77	104	104	104	104
			kg	35	35	47	47	47	47
Gross Weight			LBS	88	88	119	119	119	119
			kg	40	40	54	54	54	54
Pipe Connections	Liquid Side		mm	Φ9.52	Φ9.52	Φ9.52	Φ9.52	Φ9.52	Φ9.52
			inch	Φ3/8	Φ3/8	Φ3/8	Φ3/8	Φ3/8	Φ3/8
	Gas Side		mm	Φ15.9	Φ15.9	Φ15.9	Φ15.9	Φ15.9	Φ15.9
			inch	Φ5/8	Φ5/8	Φ5/8	Φ5/8	Φ5/8	Φ5/8
	Drain Pipe		mm	Φ25	Φ25	Φ25	Φ25	Φ25	Φ25
			inch	Φ1	Φ1	Φ1	Φ1	Φ1	Φ1
Power Supply				1-phase 208/230V 60Hz					
Fan	Type × Quantity			Centrifugal ×2	Centrifugal ×2	Centrifugal ×2	Centrifugal ×2	Centrifugal ×2	Centrifugal ×2
	Driving Mechanism			Direct-driven	Direct-driven	Direct-driven	Direct-driven	Direct-driven	Direct-driven
	Motor Type			BLDC	BLDC	BLDC	BLDC	BLDC	BLDC
	Motor Power Input		W	120	130	200	200	220	220
	Motor Running Current		A	0.9	0.9	1.4	1.4	1.6	1.6
	Airflow Rate(H/M/L)		CFM	590/470/355	650/530/410	1000/855/650	1000/855/650	1180/910/705	1180/1000/825
			m³/h	1000/800/600	1100/900/700	1700/1450/1100	1700/1450/1100	2000/1550/1200	2000/1700/1400
	External Static Pressure	Default	In.W.G	0.28	0.28	0.28	0.28	0.28	0.28
			Pa	70	70	70	70	70	70
		Range	In.W.G	0~0.4	0~0.4	0~0.4	0~0.4	0~0.4	0~0.4
			Pa	0~100	0~100	0~100	0~100	0~100	0~100
Sound Pressure Level(H/M/L)			dB(A)	44/40/36	45/41/37	46/44/42	46/44/42	48/45/42	48/46/44
Heat Exchanger				Fenestrate plain film -- hydrophilic film					
Air Filter				PP	PP	PP	PP	PP	PP
Insulation Material				Foamed polystyrene					
Refrigeration Control Device				EXV	EXV	EXV	EXV	EXV	EXV

Model	GMV-ND18 PHS/A-T(U)	GMV-ND24 PHS/A-T(U)	GMV-ND30 PHS/A-T(U)	GMV-ND36 PHS/A-T(U)	GMV-ND42 PHS/A-T(U)	GMV-ND48 PHS/A-T(U)
Protection Device	Fuse	Fuse	Fuse	Fuse	Fuse	Fuse

Model				GMV-ND72PH/A-T(U)	GMV-ND96PH/A-T(U)
Product Code				CM810N0280	CM810N0290
Cooling Capacity			Btu/h	69000	92000
			kW	20.2	27.0
Heating Capacity			Btu/h	77000	103000
			kW	22.6	30.2
Casing Finish				Galvanized Steel plate	
Dimensions (W×D×H)	Outline		mm	1483×791×385	1686×870×450
			inch	58-3/8×31-1/8×15-3/16	66-3/8×34-1/4×17-3/4
	Packaging		mm	1578×883×472	1788×988×580
			inch	62-1/8×34-3/4×18-5/8	70-3/8×38-7/8×22-7/8
Net Weight			LBS	181	232
			kg	82	105
Gross Weight			LBS	229	309
			kg	104	140
Pipe Connection	Liquid Side		mm	9.52	9.52
			inch	3/8	3/8
	Gas Side		mm	19.05	22.2
			inch	3/4	7/8
	Drain Pipe		mm	Φ25	Φ25
			inch	Φ1	Φ1
Power Supply				1-phase 208/230V 60Hz	
Fan	Type × Quantity			Centrifugal×2	Centrifugal×2
	Driving Mechanism			Direct-driven	
	Motor Type			BLDC	
	Motor Power Input		W	800	900
	Motor Running Current		A	5	6
	Airflow Rate(H/M/L)		CFM	2355/2120/1885	2590/2355/2120
			m³/h	4000/3600/3200	4400/4000/3600
	External Static Pressure	Default	In.W.G	0.4	0.4
			Pa	100	100
		Range	In.W.G	0.2~0.8	0.2~0.8
			Pa	50~200	50~200
Sound Pressure Level(H/M/L)			dB(A)	54/52/49	55/52/50
Heat Exchanger				/	
Air Filter				PP	
Insulation Material				Foamed polystyrene	
Refrigeration Control Device				EXV	
Protection Device				Fuse	

4.7 Two-way Cassette Type Indoor Unit

Model			GMV-ND09TS/A-T(U)	GMV-ND12TS/A-T(U)	GMV-ND15TS/A-T(U)	GMV-ND18TS/A-T(U)	GMV-ND24TS/A-T(U)
Product Code			CM500N0890	CM500N0900	CM500N0910	CM500N0920	CM500N0930
Cooling Capacity		Btu/h	9500	12000	15000	18000	24000
		kW	2.8	3.5	4.4	5.3	7
Heating Capacity		Btu/h	10500	13500	17000	20000	27000
		kW	3.1	4.0	5	5.9	7.9
Casing Finish			Galvanized Steel plate				
Dimensions (W×D×H)	Body Outline	mm	1200×520×340	1200×520×340	1200×520×340	1200×520×340	1200×520×340
		inch	47-1/4×20-1/2 ×13-3/8	47-1/4×20-1/2 ×13-3/8	47-1/4×20-1/2 ×13-3/8	47-1/4×20-1/2 ×13-3/8	47-1/4×20-1/2 ×13-3/8
	Body Packaging	mm	1523×658×430	1523×658×430	1523×658×430	1523×658×430	1523×658×430
		inch	60×26×17	60×26×17	60×26×17	60×26×17	60×26×17
	Panel outline	mm	1443×630×33	1443×630×33	1443×630×33	1443×630×33	1443×630×33
		inch	55-3/4 ×24-13/16 ×1-1/4	55-3/4 ×24-13/16 ×1-1/4	55-3/4 ×24-13/16 ×1-1/4	55-3/4 ×24-13/16 ×1-1/4	55-3/4 ×24-13/16 ×1-1/4
	Panel Packaging	mm	1578×658×120	1578×658×120	1578×658×120	1578×658×120	1578×658×120
		inch	62-1/8×30-1/4 ×4-11/16	62-1/8×30-1/4 ×4-11/16	62-1/8×30-1/4 ×4-11/16	62-1/8×30-1/4 ×4-11/16	62-1/8×30-1/4 ×4-11/16
Net Weight	Body	LBS	95	95	95	95	101
		kg	43	43	43	43	46
	Panel	LBS	15	15	15	15	15
		kg	7	7	7	7	7
Gross Weight	Body	LBS	119	119	119	119	123
		kg	54	54	54	54	56
	Panel	LBS	24	24	24	24	24
		kg	11	11	11	11	11
Pipe Connection	Liquid Side	mm	Φ6.35	Φ6.35	Φ6.35	Φ9.52	Φ9.52
		inch	Φ1/4	Φ1/4	Φ1/4	Φ3/8	Φ3/8
	Gas Side	mm	Φ9.52	Φ12.7	Φ12.7	Φ15.9	Φ15.9
		inch	Φ3/8	Φ1/2	Φ1/2	Φ5/8	Φ5/8
	Drain Pipe	mm	Φ25	Φ25	Φ25	Φ25	Φ25
		inch	Φ1	Φ1	Φ1	Φ1	Φ1
Power Supply			1-phase 208/230V 60Hz		1-phase 208/230V 60Hz		
Fan	Type × Quantity		Centrifugal×3	Centrifugal×3	Centrifugal×3	Centrifugal×3	Centrifugal×3
	Driving Mechanism		Direct-driven				
	Motor Type		BLDC				
	Motor Power Input	W	55	55	55	55	91
	Motor Running Current	A	0.6	0.6	0.6	0.6	0.7
	Airflow Rate(H/M/L)	CFM	490/355/312	490/355/312	490/355/312	490/355/312	650/483/448
		m³/h	830/600/530	830/600/530	830/600/530	830/600/530	1100/820/760
Sound Pressure Level(H/M/L)		dB(A)	35/33/31	35/33/31	35/33/31	35/33/31	39/37/35
Heat Exchanger			/				
Air Filter			PP				
Insulation Material			Foamed polystyrene				
Refrigeration Control Device			EXV				
Protection Device			Fuse				
Panel name			TE01	TE01	TE01	TE01	TE01

Model			GMV-ND09TS/B-T(U)	GMV-ND12TS/B-T(U)	GMV-ND15TS/B-T(U)	GMV-ND18TS/B-T(U)	GMV-ND24TS/B-T(U)
Product code			CM500N1890	CM500N1900	CM500N1840	CM500N1880	CM500N1830
Cooling Capacity		Btu/h	9500	12000	15000	18000	24000
		kW	2.8	3.5	4.4	5.3	7
Heating Capacity		Btu/h	10500	13500	17000	20000	27000
		kW	3.1	4.0	5	5.9	7.9
Dimensions (W×D×H)	Body outline	mm	790×630×280	790×630×280	790×630×280	790×630×280	790×630×280
		inch	31-1/8×24-13/16×11	31-1/8×24-13/16×11	31-1/8×24-13/16×11	31-1/8×24-13/16×11	31-1/8×24-13/16×11
	Body Packaging	mm	1033×740×365	1033×740×365	1033×740×365	1033×740×365	1033×740×365
		inch	40-5/8×29-1/8×14-3/8	40-5/8×29-1/8×14-3/8	40-5/8×29-1/8×14-3/8	40-5/8×29-1/8×14-3/8	40-5/8×29-1/8×14-3/8
	Panel outline	mm	1100×710×28	1100×710×28	1100×710×28	1100×710×28	1100×710×28
		inch	43-5/16×28×1-3/32	43-5/16×28×1-3/32	43-5/16×28×1-3/32	43-5/16×28×1-3/32	43-5/16×28×1-3/32
	Panel Packaging	mm	1230×843×130	1230×843×130	1230×843×130	1230×843×130	1230×843×130
		inch	48-7/16×33-3/16×5-1/8	48-7/16×33-3/16×5-1/8	48-7/16×33-3/16×5-1/8	48-7/16×33-3/16×5-1/8	48-7/16×33-3/16×5-1/8
Net Weight	Body	LBS	56.2	56.2	56.2	57.3	57.3
		kg	25.5	25.5	25.5	26	26
	Panel	LBS	13.2	13.2	13.2	13.2	13.2
		kg	6	6	6	6	6
Gross Weight	Body	LBS	73.9	73.9	73.9	76.1	76.1
		kg	33.5	33.5	33.5	34.5	34.5
	Panel	LBS	23.2	23.2	23.2	23.2	23.2
		kg	10.5	10.5	10.5	10.5	10.5
Pipe Connection	Liquid Side	mm	Φ6.35	Φ6.35	Φ6.35	Φ9.52	Φ9.52
		inch	Φ1/4	Φ1/4	Φ1/4	Φ3/8	Φ3/8
	Gas Side	mm	Φ9.52	Φ12.7	Φ12.7	Φ15.9	Φ15.9
		inch	Φ3/8	Φ1/2	Φ1/2	Φ5/8	Φ5/8
	Drain Pipe	mm	Φ25	Φ25	Φ25	Φ25	Φ25
		inch	Φ1	Φ1	Φ1	Φ1	Φ1
Power supply			1-phase 208/230V 60Hz		1-phase 208/230V 60Hz		
Fan	Type * Quantity		Centrifugal*1	Centrifugal*1	Centrifugal*1	Centrifugal*1	Centrifugal*1
	Driving Mechanism		Direct-driven				
	Motor Type		BLDC				
	Motor Power Input	W	20	20	30	30	55
	Motor Running Current	A	0.25	0.25	0.3	0.3	0.49
	Airflow Rate(H/M/L)	CFM	395/363/302	395/363/302	421/363/302	450/417/398	480/438/388
		m³/h	671/616/513	671/616/513	715/616/513	764/709/676	816/745/660
Sound Pressure Level(H/M/L)		dB(A)	33/31/28	33/31/28	35/31/28	37/35/32	39/37/34
Heat Exchanger			/				
Air Filter			PP				
Insulation Material			Foamed polystyrene				
Refrigeration Control Device			EXV				

Model	GMV-ND09TS/B-T(U)	GMV-ND12TS/B-T(U)	GMV-ND15TS/B-T(U)	GMV-ND18TS/B-T(U)	GMV-ND24TS/B-T(U)
Protection Device	Fuse				
Panel name	TE03	TE03	TE03	TE03	TE03

4.8 Floor Ceiling Type Indoor Unit

Model			GMV-ND09ZD/A-T(U)	GMV-ND12ZD/A-T(U)	GMV-ND18ZD/A-T(U)	GMV-ND24ZD/A-T(U)
Product Code			CM600N0420	CM600N0430	CM600N0440	CM600N0450
Cooling Capacity		Btu/h	9500	12000	18000	24000
		kW	2.8	3.5	5.3	7.0
Heating Capacity		Btu/h	10500	13500	20000	27000
		kW	3.1	4.0	5.9	7.9
Casing Finish			Galvanized Steel plate			
Dimensions (W×D×H)	Outline	mm	1220×700×225	1220×700×225	1220×700×225	1420×700×245
		inch	48×27-9/16 ×8-7/8	48×27-9/16 ×8-7/8	48×27-9/16 ×8-7/8	55-7/8×27-9/16 ×9-5/8
	Packaging	mm	1343×823×315	1343×823×315	1343×823×315	1548×828×345
		inch	52-7/8×32-3/8 ×12-3/8	52-7/8×32-3/8 ×12-3/8	52-7/8×32-3/8 ×12-3/8	60-15/16×32-5/8 ×13-9/16
Net Weight		LBS	88	88	88	110
		kg	40	40	40	50
Gross Weight		LBS	108	108	108	128
		kg	49	49	49	58
Pipe Connection	Liquid Side	mm	Φ6.35	Φ6.35	Φ9.52	Φ9.52
		inch	Φ1/4	Φ1/4	Φ3/8	Φ3/8
	Gas Side	mm	Φ9.52	Φ12.7	Φ15.9	Φ15.9
		inch	Φ3/8	Φ1/2	Φ5/8	Φ5/8
	Drain Pipe	mm	Φ17	Φ17	Φ17	Φ17
		inch	Φ11/16	Φ11/16	Φ11/16	Φ11/16
Power Supply			1-phase 208/230V 60Hz		1-phase 208/230V 60Hz	
Fan	Type × Quantity		Centrifugal×4	Centrifugal×4	Centrifugal×4	Centrifugal×3
	Driving Mechanism		Direct-driven		Direct-driven	
	Motor Type		BLDC		BLDC	
	Motor Power Input	W	40	40	50	75
	Motor Running Current	A	0.5	0.5	0.5	0.55
	Airflow Rate(H/M/L)	CFM	380/345/305	380/345/305	560/510/410	825/675/640
		m³/h	650/585/520	650/585/520	950/865/699	1400/1150/1085
Sound Pressure Level(H/M/L)		dB(A)	36/34/32	36/34/32	42/38/33	44/42/39
Heat Exchanger			/	/	/	/
Air Filter			PP	PP	PP	PP
Insulation Material			Foamed polystyrene			
Refrigeration Control Device			EXV	EXV	EXV	EXV
Protection Device			Fuse	Fuse	Fuse	Fuse

Model			GMV-ND30ZD/A-T(U)	GMV-ND36ZD/A-T(U)	GMV-ND42ZD/A-T(U)	GMV-ND48ZD/A-T(U)
Product Code			CM600N0460	CM600N0470	CM600N0480	CM600N0490
Cooling Capacity		Btu/h	30000	36000	42000	48000
		kW	8.8	10.6	12.3	14.1
Heating Capacity		Btu/h	33000	40000	47000	54000
		kW	10.0	11.7	13.8	15.8
Casing Finish			Galvanized Steel plate			
Dimensions (W×D×H)	Outline	mm	1420×700×245	1700×700×245	1700×700×245	1700×700×245
		inch	55-7/8×27-9/16 ×9-5/8	66-15/16×27-9/16 ×9-5/8	66-15/16×27-9/16 ×9-5/8	66-15/16×27-9/16 ×9-5/8
	Packaging	mm	1548×828×345	1828×828×345	1828×828×345	1828×828×345
		inch	60-15/16×32-5/8× 13-9/16	71-15/16×32-5/8× 13-9/16	71-15/16×32-5/8× 13-9/16	71-15/16×32-5/8× 13-9/16
Net Weight		LBS	110	132	132	132
		kg	50	60	60	60
Gross Weight		LBS	128	150	150	150
		kg	58	68	68	68
Pipe Connection	Liquid Side	mm	Φ9.52	Φ9.52	Φ9.52	Φ9.52
		inch	Φ3/8	Φ3/8	Φ3/8	Φ3/8
	Gas Side	mm	Φ15.9	Φ15.9	Φ15.9	Φ15.9
		inch	Φ5/8	Φ5/8	Φ5/8	Φ5/8
	Drain Pipe	mm	Φ17	Φ17	Φ17	Φ17
		inch	Φ11/16	Φ11/16	Φ11/16	Φ11/16
Power Supply			1-phase 208/230V 60Hz		1-phase 208/230V 60Hz	
Fan	Type × Quantity		Centrifugal×3	Centrifugal×4	Centrifugal×4	Centrifugal×4
	Driving Mechanism		Direct-driven		Direct-driven	
	Motor Type		BLDC		BLDC	
	Motor Power Input	W	140	160	160	160
	Motor Running Current	A	0.6	0.7	0.7	0.7
	Airflow Rate(H/M/L)	CFM	940/850/695	1180/904/755	1180/1065/855	1180/1065/855
		m³/h	1600/1445/1183	2000/1600/1282	2000/1813/1452	2000/1813/1452
Sound Pressure Level(H/M/L)		dB(A)	50/47/43	51/47/42	52/49/45	52/49/45
Heat Exchanger			/	/	/	/
Air Filter			PP	PP	PP	PP
Insulation Material			Foamed polystyrene			
Refrigeration Control Device			EXV	EXV	EXV	EXV
Protection Device			Fuse	Fuse	Fuse	Fuse

4.9 Fresh air Processing Type Indoor Unit

Model				GMV-NDX42P/A-T(U)	GMV-NDX48P/A-T(U)	GMV-NDX54P/A-T(U)
Product Code				CM810N1250	CM810N1030	CM810N1240
Cooling Capacity			Btu/h	42000	48000	54000
			kW	12.3	14.1	15.8
Heating Capacity*1			Btu/h	29000	34000	45000
			kW	8.5	10.0	13.2
Heating Capacity*2			Btu/h	36000	41000	52000
			kW	10.5	12.0	15.2
Casing Finish				Galvanized Steel plate		
Dimensions (W×D×H)	Outline		mm	1400×700×300	1400×700×300	1483×791×385
			inch	55-1/8×27-9/16×11-13/16	55-1/8×27-9/16×11-13/16	58-3/8×31-1/8×15-3/16
	Packaging		mm	1601×813×365	1601×813×365	1578×883×472
			inch	63×32×14-3/8	63×32×14-3/8	62-1/8×34-3/4×18-5/8
Net Weight			LBS	119	119	181
			kg	54	54	82
Gross Weight			LBS	134	134	229
			kg	61	61	104
Pipe Connection	Liquid Side		mm	Φ9.52	Φ9.52	Φ9.52
			inch	Φ3/8	Φ3/8	Φ3/8
	Gas Side		mm	Φ15.9	Φ15.9	Φ19.05
			inch	Φ5/8	Φ5/8	Φ3/4
	Drain Pipe		mm	Φ25	Φ25	Φ25
			inch	Φ1	Φ1	Φ1
Power Supply				1-phase 208/230V 60Hz		
Fan	Type × Quantity			Centrifugal×3	Centrifugal×3	Centrifugal×2
	Driving Mechanism			Direct-driven		
	Motor Type			BLDC		
	Motor Power Input		W	350	350	760
	Motor Running Current		A	2.0	2.0	4.3
	Airflow Rate(H/M/L)		CFM	706/589~1177	706/589~1177	1177/883~1766
			m³/h	1200/1000~2000	1200/1000~2000	2000/1500~3000
	External Static Pressure	Default	In.W.G	0.6	0.6	0.8
			Pa	150	150	200
		Range	In.W.G	0.2~0.8	0.2~0.8	0.2~1.2
			Pa	50~200	50~200	50~300
Sound Pressure Level(H/M/L)			dB(A)	40~50	40~50	45~55
Heat Exchanger				/		
Air Filter				PP		
Insulation Material				Foamed polystyrene		
Refrigeration Control Device				EXV		
Protection Device				Fuse		

Model				GMV-NDX72P/A-T(U)	GMV-NDX96P/A-T(U)
Product Code				CM810N0480	CM810N0470
Cooling Capacity			Btu/h	72000	96000
			kW	21.1	28.1
Heating Capacity*1			Btu/h	55000	68000
			kW	16.1	20.0
Heating Capacity*2			Btu/h	68000	75000
			kW	20.0	22.0
Casing Finish				Galvanized Steel plate	
Dimensions (W×D×H)	Outline		mm	1483×791×385	1483×791×385
			inch	58-3/8×31-1/8×15-3/16	58-3/8×31-1/8×15-3/16
	Packaging		mm	1578×883×472	1578×883×472
			inch	62-1/8×34-3/4×18-5/8	62-1/8×34-3/4×18-5/8
Net Weight			LBS	181	181
			kg	82	82
Gross Weight			LBS	229	229
			kg	104	104
Pipe Connection	Liquid Side		mm	Φ9.52	Φ9.52
			inch	Φ3/8	Φ3/8
	Gas Side		mm	Φ19.05	Φ22.2
			inch	Φ3/4	Φ7/8
	Drain Pipe		mm	Φ25	Φ25
			inch	Φ1	Φ1
Power Supply				1-phase 208/230V 60Hz	
Fan	Type × Quantity			Centrifugal×2	Centrifugal×2
	Driving Mechanism			Direct-driven	
	Motor Type			BLDC	
	Motor Power Input		W	750	750
	Motor Running Current		A	4.3	4.9
	Airflow Rate(H/M/L)		CFM	1177/883~1766	1471/1177~2060
			m³/h	2000/1500~3000	2500/2000~3500
	External Static Pressure	Default	In.W.G	0.8	0.8
			Pa	200	200
		Range	In.W.G	0.2~1.2	0.2~1.2
			Pa	50~300	50~300
Sound Pressure Level(H/M/L)			dB(A)	45~54	47~54
Heat Exchanger				/	
Air Filter				PP	
Insulation Material				Foamed polystyrene	
Refrigeration Control Device				EXV	
Protection Device				Fuse	

NOTICE!

① Rated cooling capacity test conditions: indoor 95.0°F DB/82.4°F WB, outdoor 95.0°F DB; connection pipe length: 24-5/8ft., without height drop between units. The default air outlet temperature of the unit is 64.4°F.

② Rated heating capacity test conditions: *1. indoor 44.6°F DB, outdoor 44.6°F DB/42.8 °F WB, *2 indoor 32°F DB, outdoor 32°F DB/26.8°F WB, connection pipe length: 24-5/8ft., without height drop between units. The default air outlet temperature of the unit is 71.6°F.

③ The Sound Pressure Level will change with the External Static Pressure.

④ This series can be matched with GMV5 only.

4.10 Compact Four-way Cassette Type Indoor Unit

Model			GMV-ND07T/B-T(U)	GMV-ND09T/B-T(U)	GMV-ND12T/B-T(U)	GMV-ND15T/B-T(U)	GMV-ND18T/B-T(U)
Product Code			CM500N0940	CM500N0950	CM500N0960	CM500N0970	CM500N0980
Cooling Capacity		Btu/h	7500	9500	12000	15000	18000
		kW	2.2	2.8	3.5	4.4	5.3
Heating Capacity		Btu/h	8500	10500	13500	17000	20000
		kW	2.5	3.1	4.0	5.0	5.9
Casing Finish			Galvanized Steel plate				
Dimensions (W×D×H)	Body Outline	mm	596×596×240	596×596×240	596×596×240	596×596×240	596×596×240
		inch	23-1/2×23-1/2 ×9-1/2	23-1/2×23-1/2 ×9-1/2	23-1/2×23-1/2 ×9-1/2	23-1/2×23-1/2 ×9-1/2	23-1/2×23-1/2 ×9-1/2
	Body Packaging	mm	778×738×300	778×738×300	778×738×300	778×738×300	778×738×300
		inch	30-5/8×29 ×11-3/4	30-5/8×29 ×11-3/4	30-5/8×29 ×11-3/4	30-5/8×29 ×11-3/4	30-5/8×29 ×11-3/4
	Panel Outline	mm	670×670×50	670×670×50	670×670×50	670×670×50	670×670×50
		inch	26-3/8×26-3/8 ×2	26-3/8×26-3/8 ×2	26-3/8×26-3/8 ×2	26-3/8×26-3/8 ×2	26-3/8×26-3/8 ×2
	Panel Packaging	mm	763×763×105	763×763×105	763×763×105	763×763×105	763×763×105
		inch	30×30×4-1/8	30×30×4-1/8	30×30×4-1/8	30×30×4-1/8	30×30×4-1/8
Net Weigh	Main Body	LBS	49	49	49	49	49
		kg	22	22	22	22	22
	Panel	LBS	8	8	8	8	8
		kg	3.5	3.5	3.5	3.5	3.5
Gross Weigh	Main Body	LBS	60	60	60	60	60
		kg	27	27	27	27	27
	Panel	LBS	11	11	11	11	11
		kg	5	5	5	5	5
Pipe Connections	Liquid Side	mm	Φ6.35	Φ6.35	Φ6.35	Φ6.35	Φ9.52
		inch	Φ1/4	Φ1/4	Φ1/4	Φ1/4	Φ3/8
	Gas Side	mm	Φ9.52	Φ9.52	Φ12.7	Φ12.7	Φ15.9
		inch	Φ3/8	Φ3/8	Φ1/2	Φ1/2	Φ5/8
	Drain Pipe	mm	Φ25	Φ25	Φ25	Φ25	Φ25
		inch	Φ1	Φ1	Φ1	Φ1	Φ1
Power Supply			1-phase 208/230V 60Hz				
Fan	Type × Quantity		Centrifugal×1	Centrifugal×1	Centrifugal×1	Centrifugal×1	Centrifugal×1
	Driving Mechanism		Direct-driven	Direct-driven	Direct-driven	Direct-driven	Direct-driven
	Motor Type		BLDC	BLDC	BLDC	BLDC	BLDC
	Motor Power Input	W	35	35	35	45	45
	Motor Running Current	A	0.4	0.4	0.4	0.5	0.5
	Airflow Rate(H/M/L)	CFM	355/295/235	355/295/235	355/295/235	410/355/283	410/355/283
		m³/h	600/500/400	600/500/400	600/500/400	700/600/480	700/600/480
Sound Pressure Level(H/M/L)		dB(A)	38/36/33	38/36/33	38/36/33	45/42/36	45/42/36

Model	GMV-ND07T/B-T(U)	GMV-ND09T/B-T(U)	GMV-ND12T/B-T(U)	GMV-ND15T/B-T(U)	GMV-ND18T/B-T(U)
Heat Exchanger	Fenestrate plain film --hydrophilic film				
Air Filter	PP	PP	PP	PP	PP
Insulation Material	Foamed polystyrene	Foamed polystyrene	Foamed polystyrene	Foamed polystyrene	Foamed polystyrene
Refrigeration Control Device	EXV	EXV	EXV	EXV	EXV
Protection Device	Fuse	Fuse	Fuse	Fuse	Fuse
Panel Name	TC03	TC03	TC03	TC03	TC03

4.11 Super High Static Pressure Duct Type Indoor Unit

Model				GMV-ND07PHS/B- T(U)	GMV-ND09PHS/B- T(U)	GMV-ND12PHS/B-T(U)	GMV-ND15PHS/B-T(U)
Product code				CM810N0830	CM810N0790	CM810N0800	CM810N0770
Cooling Capacity			Btu/h	7500	9500	12000	15000
			kW	2.2	2.8	3.5	4.4
Heating Capacity			Btu/h	8500	10500	13500	17000
			kW	2.5	3.1	4	5
Casing Finish				Galvanized Steel plate			
Dimensions (W×D×H)	Outline		mm	700x700×300	700x700×300	1000×700×300	1000×700×300
			inch	27-9/16×27-9/16 ×11-13/16	27-9/16×27-9/16 ×11-13/16	39-3/8×27-9/16 ×11-13/16	39-3/8×27-9/16 ×11-13/16
	Packaging		mm	897×808×360	897×808×360	1205×813×360	1205×813×360
			inch	35-5/16×32 ×14-3/16	35-5/16×32 ×14-3/16	47-7/16×32 ×14-3/16	47-7/16×32 ×14-3/16
Net Weight			LBS	73	73	94	94
			kg	33	33	42.6	42.6
Gross Weight			LBS	86	86	108	108
			kg	39	39	49	49
Pipe Connections	Liquid Side		mm	Φ6.35	Φ6.35	Φ6.35	Φ6.35
			inch	Φ1/4	Φ1/4	Φ1/4	Φ1/4
	Gas Side		mm	Φ9.52	Φ9.52	Φ12.7	Φ12.7
			inch	Φ3/8	Φ3/8	Φ1/2	Φ1/2
	Drain Pipe		mm	Φ25	Φ25	Φ25	Φ25
			inch	Φ1	Φ1	Φ1	Φ1
Power Supply				1-phase 208/230V 60Hz			
Fan	Type × Quantity			Centrifugal×1	Centrifugal×1	Centrifugal×2	Centrifugal×2
	Driving Mechanism			Direct-driven	Direct-driven	Direct-driven	Direct-driven
	Motor Type			BLDC	BLDC	BLDC	BLDC
	Motor Power Input		W	/	/	/	/
	Motor Running Current		A	0.3	0.3	0.3	0.3
	Airflow Rate (H/M/L)		CFM	324/282/235	324/282/235	353/294/247	500/412/353
			m³/h	550/480/400	550/480/400	600/500/420	850/700/600
	External Static Pressure	Default	In.W.G	0.24	0.24	0.24	0.24
			Pa	60	60	60	60
		Range	In.W.G	0~0.6	0~0.6	0~0.6	0~0.6
			Pa	0~150	0~150	0~150	0~150
Sound Pressure Level(H/M/L)			dB(A)	35/33/31	35/33/31	36/34/32	40/37/34
Heat Exchanger				Fenestrate plain film -- hydrophilic film			
Air Filter				PP	PP	PP	PP
Insulation Material				Foamed polystyrene			
Refrigeration Control Device				EXV	EXV	EXV	EXV
Protection Device				Fuse	Fuse	Fuse	Fuse

Model				GMV-ND18PHS/B-T(U)	GMV-ND22PHS/B-T(U)	GMV-ND24PHS/B-T(U)	GMV-ND30PHS/B-T(U)
Product code				CM810N0810	CM810N0720	CM810N0730	CM810N0780
Cooling Capacity			Btu/h	18000	22000	24000	30000
			kW	5.3	6.4	7	8.8
Heating Capacity			Btu/h	20000	24000	27000	34000
			kW	5.9	7	7.9	10
Casing Finish				Galvanized Steel plate			
Dimensions (W×D×H)	Outline		mm	1000×700×300	1000×700×300	1000×700×300	1400×700×300
			inch	39-3/8×27-9/16 ×11-13/16	39-3/8×27-9/16 ×11-13/16	39-3/8×27-9/16 ×11-13/16	55-1/8×27-9/16 ×11-13/16
	Packaging		mm	1205×813×360	1205×813×360	1205×813×360	1601×813×365
			inch	47-7/16×32 ×14-3/16	47-7/16×32 ×14-3/16	47-7/16×32 ×14-3/16	63-1/16×32 ×x14-3/8
Net Weight			LBS	94	94	94	121
			kg	42.6	42.6	42.6	55
Gross Weight			LBS	108	108	108	137
			kg	49	49	49	62
Pipe Connections	Liquid Side		mm	Φ9.52	Φ9.52	Φ9.52	Φ9.52
			inch	Φ3/8	Φ3/8	Φ3/8	Φ3/8
	Gas Side		mm	Φ15.9	Φ15.9	Φ15.9	Φ15.9
			inch	Φ5/8	Φ5/8	Φ5/8	Φ5/8
	Drain Pipe		mm	Φ25	Φ25	Φ25	Φ25
			inch	Φ1	Φ1	Φ1	Φ1
Power supply				1-phase 208/230V 60Hz			
Fan	Type × Quantity			Centrifugal×2	Centrifugal×2	Centrifugal×2	Centrifugal×3
	Driving Mechanism			Direct-driven	Direct-driven	Direct-driven	Direct-driven
	Motor Type			BLDC	BLDC	BLDC	BLDC
	Motor Power Input		W	/	/	/	/
	Motor Running Current		A	0.7	0.7	0.9	1.2
	Airflow Rate(H/M/L)		CFM	589/471/412	589/471/412	736/618/559	1059/853/736
			m³/h	1000/800/700	1000/800/700	1250/1050/950	1800/1450/1250
	External Static Pressure	Default	In.W.G	0.36	0.36	0.36	0.36
			Pa	90	90	90	90
		Range	In.W.G	0~0.8	0~0.8	0~0.8	0~0.8
			Pa	0~200	0~200	0~200	0~200
Sound Pressure Level(H/M/L)			dB(A)	42/38/35	42/38/35	43/39/35	44/41/38
Heat Exchanger				Fenestrate plain film -- hydrophilic film			
Air Filter				PP	PP	PP	PP
Insulation Material				Foamed polystyrene			
Refrigeration Control Device				EXV	EXV	EXV	EXV
Protection Device				Fuse	Fuse	Fuse	Fuse

Model				GMV-ND36PHS/B-T(U)	GMV-ND42PHS/B-T(U)	GMV-ND48PHS/B-T(U)	GMV-ND54PHS/B-T(U)
Product Code				CM810N0740	CM810N0750	CM810N0820	CM810N0760
Cooling Capacity			Btu/h	36000	42000	48000	54000
			kW	10.6	12.3	14.1	15.8
Heating Capacity			Btu/h	40000	47000	54000	60000
			kW	11.7	13.8	15	17.6
Casing Finish				Galvanized Steel plate			
Dimensions (W×D×H)	Outline		mm	1400×700×300	1400×700×300	1400×700×300	1400×700×300
			inch	55-1/8×27-9/16 ×11-13/16	55-1/8×27-9/16 ×11-13/16	55-1/8×27-9/16 ×11-13/16	55-1/8×27-9/16 ×11-13/16
	Packaging		mm	1601×813×365	1601×813×365	1678×808×365	1678×808×365
			inch	63-1/16×32×14-3/8	63-1/16×32×14-3/8	66-1/16×32×14-3/8	66-1/16×32×14-3/8
Net Weight			LBS	121	121	128	128
			kg	55	55	58	58
Gross Weight			LBS	137	137	148	148
			kg	62	62	67	67
Pipe Connections	Liquid Side		mm	Φ9.52	Φ9.52	Φ9.52	Φ9.52
			inch	Φ3/8	Φ3/8	Φ3/8	Φ3/8
	Gas Side		mm	Φ15.9	Φ15.9	Φ15.9	Φ19.05
			inch	Φ5/8	Φ5/8	Φ5/8	Φ3/4
	Drain Pipe		mm	Φ25	Φ25	Φ25	Φ25
			inch	Φ1	Φ1	Φ1	Φ1
Power supply				1-phase 208/230V 60Hz			
Fan	Type × Quantity			Centrifugal×3	Centrifugal×3	Centrifugal×3	Centrifugal×3
	Driving Mechanism			Direct-driven	Direct-driven	Direct-driven	Direct-driven
	Motor Type			BLDC	BLDC	BLDC	BLDC
	Motor Power Input		W	/	/	/	/
	Motor Running Current		A	1.2	1.2	1.3	1.3
	Airflow Rate(H/M/L)		CFM	1177/942/824	1177/942/824	1383/1118/971	1471/1177/1030
			m³/h	2000/1600/1400	2000/1600/1400	2350/1900/1650	2500/2000/1750
	External Static Pressure	Default	In.W.G	0.36	0.36	0.36	0.36
			Pa	90	90	90	90
		Range	In.W.G	0~0.8	0~0.8	0~0.8	0~0.8
			Pa	0~200	0~200	0~200	0~200
Sound Pressure Level(H/M/L)			dB(A)	45/42/40	45/42/40	46/43/41	47/44/42
Heat Exchanger				Fenestrate plain film -- hydrophilic film			
Air Filter				PP	PP	PP	PP
Insulation Material				Foamed polystyrene			
Refrigeration Control Device				EXV	EXV	EXV	EXV
Protection Device				Fuse	Fuse	Fuse	Fuse

Model				GMV-ND72PH/B-T(U)	GMV-ND96PH/B-T(U)
Product Code				CM810N1600	CM810N1590
Cooling Capacity			Btu/h	72000	96000
			kW	21.1	28.1
Heating Capacity			Btu/h	81000	108000
			kW	23.7	31.7
Casing Finish				Galvanized Steel plate	
Dimensions (W×D×H)	Outline		mm	1240X1040X470	1240X1040X470
			inch	48-3/4×41×18-1/2	48-3/4×41×18-1/2
	Packaging		mm	1520x1153X605	1520x1153X605
			inch	59-7/8×45-3/8×23-7/8	59-7/8×45-3/8×23-7/8
Net Weight			LBS	223	236
			kg	101	107
Gross Weight			LBS	331	340
			kg	150	154
Pipe Connections	Liquid Side		mm	Φ9.52	Φ9.52
			inch	Φ3/8	Φ3/8
	Gas Side		mm	Φ19.05	Φ22.2
			inch	Φ3/4	Φ7/8
	Drain Pipe		mm	Φ25	Φ25
			inch	Φ1	Φ1
Power Supply				1-phase 208/230V 60Hz	
Fan	Type × Quantity			Centrifugal×2	Centrifugal×2
	Driving Mechanism			Direct-driven	Direct-driven
	Motor Type			BLDC	BLDC
	Motor Power Input		W	750	750
	Motor Running Current		A	4.5	5.4
	Airflow Rate (H/M/L)		CFM	2355/1885/1650	2530/2120/1885
			m^3/h	4000/3200/2800	4300/3600/3200
	External Static Pressure	Default	In.W.G	0.52	0.6
			Pa	130	150
		Range	In.W.G	0.2~0.98	0.2~1.1
			Pa	50~245	50~275
Sound Pressure Level(H/M/L)			dB(A)	46/45/44	48/46/45
Heat Exchanger				Fenestrate plain film -- hydrophilic film	
Air Filter				PP	PP
Insulation Material				Foamed polystyrene	
Refrigeration Control Device				EXV	EXV
Protection Device				Fuse	Fuse

4.12 Air Handler Type Indoor Unit

GMV-ND**A/A-T(U):

Model				GMV-ND09A/ A-T(U)	GMV-ND12A/ A-T(U)	GMV-ND18A/ A-T(U)	GMV-ND24A/ A-T(U)	GMV-ND30A/ A-T(U)
Product Code				CM810N1900	CM810N1910	CM810N1890	CM810N0660	CM810N0670
Cooling Capacity			Btu/h	9500	12000	18000	24000	30000
			kW	2.8	3.5	5.3	7.0	8.8
Heating Capacity			Btu/h	10500	13500	20000	27000	34000
			kW	3.1	4.0	5.9	7.9	10.0
Casing Finish				Galvanized Steel plate				
Dimensions (W×D×H)	Outline		mm	460x540×1105	460x540×1105	460x540×1105	460x540×1105	460x540×1105
			inch	18-1/8×21-1/4 ×43-1/2	18-1/8×21-1/4 ×43-1/2	18-1/8×21-1/4 ×43-1/2	18-1/8×21-1/4 ×43-1/2	18-1/8×21-1/4 ×43-1/2
	Packaging		mm	517×620×1170	517×620×1170	517×620×1170	517×620×1170	517×620×1170
			inch	20-3/8×24-3/8 ×46-1/8	20-3/8×24-3/8 ×46-1/8	20-3/8×24-3/8 ×46-1/8	20-3/8×24-3/8 ×46-1/8	20-3/8×24-3/8 ×46-1/8
Net Weight			LBS	119	119	124	124	124
			kg	54	54	56	56	56
Gross Weight			LBS	128	128	135	135	135
			kg	58	58	61	61	61
Pipe Connections	Liquid Side		mm	Φ6.35	Φ6.35	Φ9.52	Φ9.52	Φ9.52
			inch	Φ1/4	Φ1/4	Φ3/8	Φ3/8	Φ3/8
	Gas Side		mm	Φ9.52	Φ12.7	Φ15.9	Φ15.9	Φ15.9
			inch	Φ3/8	Φ1/2	Φ5/8	Φ5/8	Φ5/8
	Drain Pipe		/	G1	G1	G1	G1	G1
Power Supply				1-phase 208/230V 60Hz				
Fan	Type × Quantity			Centrifugal×1	Centrifugal×1	Centrifugal×1	Centrifugal×1	Centrifugal×1
	Driving Mechanism			Direct-driven	Direct-driven	Direct-driven	Direct-driven	Direct-driven
	Motor Type			BLDC	BLDC	BLDC	BLDC	BLDC
	Motor Power Input		W	55.0	55.0	122.5	122.5	183.7
	Motor Running Current		A	1.1	1.1	1.1	1.1	1.4
	Airflow Rate(H/M/L)		CFM	559/383/324	559/383/324	824/706/559	824/706/559	882/706/559
			m³/h	950/650/550	950/650/550	1400/1200/950	1400/1200/950	1500/1200/950
	External Static Pressure	Default	In.W.G	0.1	0.1	0.1	0.1	0.15
			Pa	25	25	25	25	37
		Range	In.W.G	0~0.3	0~0.3	0~0.3	0~0.3	0~0.3
			Pa	0~75	0~75	0~75	0~75	0~75
Sound Pressure Level(H/M/L)			dB(A)	36/34/32	36/34/32	45/43/41	45/43/41	46/44/42
Heat Exchanger				Fenestrate plain film -- hydrophilic film				
Air Filter				PP	PP	PP	PP	PP
Insulation Material				Foamed polystyrene				
Refrigeration Control Device				EXV	EXV	EXV	EXV	EXV
Protection Device				Fuse	Fuse	Fuse	Fuse	Fuse

Model				GMV-ND36A/A-T(U)	GMV-ND42A/A-T(U)	GMV-ND48A/A-T(U)	GMV-ND54A/A-T(U)
Product Code				CM810N0700	CM810N0690	CM810N0680	CM810N0710
Cooling Capacity			Btu/h	36000	42000	48000	54000
			kW	10.6	12.3	14.1	15.8
Heating Capacity			Btu/h	40000	47000	54000	60000
			kW	11.7	13.8	15.8	17.6
Casing Finish				Galvanized Steel plate			
Dimensions (W×D×H)	Outline		mm	540×540×1224	540×540×1224	630×540×1224	630×540×1226
			inch	21-1/4×21-1/4 ×48-1/4	21-1/4×21-1/4 ×48-1/4	24-7/8×21-1/4 ×48-1/4	24-7/8×21-1/4 ×48-1/4
	Packaging		mm	597×620×1289	597×620×1289	687×621×1295	687×621×1295
			inch	23-1/2×24-3/8 ×50-3/4	23-1/2×24-3/8 ×50-3/4	27×24-1/2×51	27×24-1/2×51
Net Weight			LBS	148	148	179	179
			kg	67	67	81	81
Gross Weight			LBS	159	159	192	192
			kg	72	72	87	87
Pipe Connections	Liquid Side		mm	Φ9.52	Φ9.52	Φ9.52	Φ9.52
			inch	Φ3/8	Φ3/8	Φ3/8	Φ3/8
	Gas Side		mm	Φ15.9	Φ15.9	Φ15.9	Φ15.9
			inch	Φ5/8	Φ5/8	Φ5/8	Φ5/8
	Drain Pipe		/	G1	G1	G1	G1
Power Supply				1-phase 208/230V 60Hz			
Fan	Type × Quantity			Centrifugal×1	Centrifugal×1	Centrifugal×1	Centrifugal×1
	Driving Mechanism			Direct-driven	Direct-driven	Direct-driven	Direct-driven
	Motor Type			BLDC	BLDC	BLDC	BLDC
	Motor Power Input		W	294	367.5	428.7	441
	Motor Running Current		A	2.6	2.7	3.4	3.5
	Airflow Rate(H/M/L)		CFM	1353/1176/1000	1441/1265/1118	1618/1500/1353	1676/1559/1353
			m³/h	2300/2000/1700	2450/2150/1900	2750/2550/2300	2850/2650/2300
	External Static Pressure	Default	In.W.G	0.15	0.15	0.2	0.2
			Pa	37	37	50	50
		Range	In.W.G	0~0.4	0~0.4	0~0.5	0~0.5
			Pa	0~100	0~100	0~125	0~125
Sound Pressure Level(H/M/L)			dB(A)	49/47/45	50/48/46	51/49/47	52/50/48
Heat Exchanger				Fenestrate plain film -- hydrophilic film			
Air Filter				PP	PP	PP	PP
Insulation Material				Foamed polystyrene			
Refrigeration Control Device				EXV	EXV	EXV	EXV
Protection Device				Fuse	Fuse	Fuse	Fuse

GMV-ND**A/B-T(U):

Model				GMV-ND09A/B-T(U)	GMV-ND12A/B-T(U)	GMV-ND18A/B-T(U)	GMV-ND24A/B-T(U)	GMV-ND30A/B-T(U)
Product Code				CM810N2340	CM810N2280	CM810N2300	CM810N2350	CM810N2290
Cooling Capacity			Btu/h	9500	12000	18000	24000	30000
			kW	2.78	3.52	5.28	7.03	8.79
Heating Capacity			Btu/h	10500	13500	20000	27000	34000
			kW	3.08	3.96	5.86	7.91	9.96
Casing Finish				Galvanized Steel plate				
Dimensions (W×D×H)	Outline		mm	460×540×1105	460×540×1105	460×540×1105	460×540×1105	460×540×1105
			inch	18-1/8×21-1/4×43-1/2	18-1/8×21-1/4×43-1/2	18-1/8×21-1/4×43-1/2	18-1/8×21-1/4×43-1/2	18-1/8×21-1/4×43-1/2
	Packaging		mm	517×620×1170	517×620×1170	517×620×1170	517×620×1170	517×620×1170
			inch	20-3/8×24-3/8×46-1/8	20-3/8×24-3/8×46-1/8	20-3/8×24-3/8×46-1/8	20-3/8×24-3/8×46-1/8	20-3/8×24-3/8×46-1/8
Net Weight			LBS	119	119	121	123	123
			kg	54	54	55	56	56
Gross Weight			LBS	130	130	132	134	134
			kg	59	59	60	61	61
Pipe Connections	Liquid Side		mm	Φ6.35	Φ6.35	Φ9.52	Φ9.52	Φ9.52
			inch	Φ1/4	Φ1/4	Φ3/8	Φ3/8	Φ3/8
	Gas Side		mm	Φ9.52	Φ12.7	Φ15.9	Φ15.9	Φ15.9
			inch	Φ3/8	Φ1/2	Φ5/8	Φ5/8	Φ5/8
	Drain Pipe		/	G1	G1	G1	G1	G1
Power Supply				1-phase 208/230V 60Hz				
Fan	Type × Quantity			Centrifugal×1	Centrifugal×1	Centrifugal×1	Centrifugal×1	Centrifugal×1
	Driving Mechanism			Direct-driven	Direct-driven	Direct-driven	Direct-driven	Direct-driven
	Motor Type			BLDC	BLDC	BLDC	BLDC	BLDC
	Motor Power Input		W	190	190	210	300	300
	Motor Running Current		A	1.8	1.8	2.0	2.8	2.8
	Airflow Rate(H/M/L)		CFM	400/340/280	420/360/300	650/520/300	880/800/690	910/820/710
			m³/h	680/578/476	714/612/510	1105/884/510	1495/1359/1172	1546/1393/1206
	External Static Pressure	Default	In.W.G	0.2	0.2	0.2	0.2	0.2
			Pa	50	50	50	50	50
		Range	In.W.G	0~1	0~1	0~1	0~1	0~1
			Pa	0~250	0~250	0~250	0~250	0~250
Sound Pressure Level(H/M/L)			dB(A)	36/34/33	36/34/33	39/36/33	43/41/40	44/42/40
Heat Exchanger				Fenestrate plain film -- hydrophilic film				
Air Filter				Aluminum alloy	Aluminum alloy	Aluminum alloy	Aluminum alloy	Aluminum alloy
Insulation Material				Foamed polystyrene				
Refrigeration Control Device				EXV	EXV	EXV	EXV	EXV
Protection Device				Fuse	Fuse	Fuse	Fuse	Fuse

Model				GMV-ND36A/B-T(U)	GMV-ND42A/B-T(U)	GMV-ND48A/B-T(U)	GMV-ND54A/B-T(U)	GMV-ND60A/B-T(U)
Product Code				CM810N2330	CM810N2260	CM810N2310	CM810N2320	CM810N2270
Cooling Capacity			Btu/h	36000	42000	48000	54000	60000
			kW	10.55	12.31	14.07	15.83	17.58
Heating Capacity			Btu/h	40000	47000	54000	60000	66000
			kW	11.72	13.77	15.83	17.58	19.34
Casing Finish				Galvanized Steel plate				
Dimensions (W×D×H)	Outline		mm	540×540×1224	540×540×1224	630×540×1448	630×540×1448	630×540×1448
			inch	21-1/4×21-1/4×48-1/4	21-1/4×21-1/4×48-1/4	24-3/4×21-1/4×57	24-3/4×21-1/4×57	24-3/4×21-1/4×57
	Packaging		mm	660×603×1280	660×603×1280	693×660×1508	693×660×1508	693×660×1508
			inch	26×23-3/4×50-3/8	26×23-3/4×50-3/8	27-1/4×26×59-3/8	27-1/4×26×59-3/8	27-1/4×26×59-3/8
Net Weight			LBS	159	159	198	198	198
			kg	72	72	90	90	90
Gross Weight			LBS	170	170	216	216	216
			kg	77	77	98	98	98
Pipe Connections	Liquid Side		mm	Φ9.52	Φ9.52	Φ9.52	Φ9.52	Φ9.52
			inch	Φ3/8	Φ3/8	Φ3/8	Φ3/8	Φ3/8
	Gas Side		mm	Φ15.9	Φ15.9	Φ15.9	Φ19.05	Φ19.05
			inch	Φ5/8	Φ5/8	Φ5/8	Φ3/4	Φ3/4
	Drain Pipe		/	G1	G1	G1	G1	G1
Power Supply				1-phase 208/230V 60Hz				
Fan	Type × Quantity			Centrifugal×1	Centrifugal×1	Centrifugal×1	Centrifugal×1	Centrifugal×1
	Driving Mechanism			Direct-driven	Direct-driven	Direct-driven	Direct-driven	Direct-driven
	Motor Type			BLDC	BLDC	BLDC	BLDC	BLDC
	Motor Power Input		W	430	430	770	770	770
	Motor Running Current		A	4.0	4.0	6.9	6.9	6.9
	Airflow Rate(H/M/L)		CFM	1230/1100/970	1260/1120/1000	1800/1600/1500	1800/1600/1500	1820/1650/1530
			m³/h	2090/1869/1648	2141/1903/1699	3059/2719/2549	3059/2719/2549	3093/2804/2600
	External Static Pressure	Default	In.W.G	0.2	0.2	0.2	0.2	0.2
			Pa	50	50	50	50	50
		Range	In.W.G	0~1	0~1	0~1	0~1	0~1
			Pa	0~250	0~250	0~250	0~250	0~250
Sound Pressure Level(H/M/L)			dB(A)	45/43/42	46/44/43	50/49/48	50/49/48	51/50/49
Heat Exchanger				Fenestrate plain film -- hydrophilic film				
Air Filter				Aluminum alloy	Aluminum alloy	Aluminum alloy	Aluminum alloy	Aluminum alloy
Insulation Material				Foamed polystyrene				
Refrigeration Control Device				EXV	EXV	EXV	EXV	EXV
Protection Device				Fuse	Fuse	Fuse	Fuse	Fuse

4.13 AHU-KIT

Model				GMV-N12U/A-T(U)		GMV-N24U/A-T(U)			GMV-N48U/A-T(U)		
Defaulted Capacity of ex-factory	Capacity			12		24			48		
	Cooling		kW	3.5		7.0			14.1		
	Cooling		kBtu/h	12.0		24.0			48.0		
	Heating		kW	4.0		7.9			15.8		
	Heating		kBtu/h	13.5		27.0			54.0		
Adjustable Capacity	Capacity			9	12	15	18	24	30	36	48
	Cooling		kW	2.6	3.5	4.4	5.3	7.0	8.8	10.55	14.1
	Cooling		kBtu/h	9.5	12.0	15.0	18.0	24.0	30.0	36.0	48.0
	Heating		kW	3.1	4.0	5.0	5.9	7.9	10.0	11.72	15.8
	Heating		kBtu/h	10.5	13.5	17.0	20.0	27.0	34.0	40.0	54.0
Power Input			W	5.0		5.0			5.0		
Power Supply			—	208/230V ~60Hz		208/230V ~60Hz			208/230V ~60Hz		
Size of Connection Pipe	AHU-KIT (ex-factory pipe size)		mm	Φ6.35	Φ6.35	Φ9.52	Φ9.52	Φ9.52	Φ9.52	Φ9.52	Φ9.52
			inch	Φ1/4	Φ1/4	Φ3/8	Φ3/8	Φ3/8	Φ3/8	Φ3/8	Φ3/8
	Air Handling Unit	Liquid Pipe	mm	Φ6.35	Φ6.35	Φ6.35	Φ9.52	Φ9.52	Φ9.52	Φ9.52	Φ9.52
			inch	Φ1/4	Φ1/4	Φ1/4	Φ3/8	Φ3/8	Φ3/8	Φ3/8	Φ3/8
		Gas Pipe	mm	Φ9.52	Φ12.7	Φ12.7	Φ15.9	Φ15.9	Φ15.9	Φ15.9	Φ15.9
			inch	Φ3/8	Φ1/2	Φ1/2	Φ5/8	Φ5/8	Φ5/8	Φ5/8	Φ5/8
	Connection Method			Brazing Connection		Brazing Connection			Brazing Connection		
Outline Dimension (W×D×H)		EXV Box	mm	203×326×85		203×326×85			203×326×85		
			inch	8×12-7/8×3-3/8		8×12-7/8×3-3/8			8×12-7/8×3-3/8		
		Control Box	mm	334×284×111		334×284×111			334×284×111		
			inch	13-1/8×11-1/8×4-3/8		13-1/8×11-1/8×4-3/8			13-1/8×11-1/8×4-3/8		
Net weight	kg			9.5		9.5			9.5		
	LBS			21		21			21		

Model				GMV-N96U/A-T(U)				GMV-N192U/A-T(U)		
Defaulted Capacity of ex-factory	Capacity			96				192		
	Cooling		kW	28.1				56.3		
	Cooling		kBtu/h	96.0				192		
	Heating		kW	31.7				63.3		
	Heating		kBtu/h	108.0				216		
Adjustable Capacity	Capacity			72	96	120	144	168	192	288
	Cooling		kW	21.1	28.1	35.2	42.2	49.2	56.3	84.4
	Cooling		kBtu/h	72	96	120	144	168	192	288
	Heating		kW	23.7	31.7	39.6	47.5	55.4	63.3	95.0
	Heating		kBtu/h	81	108	135	162	189	216	324
Power Input			W	5.0				5.0		
Power Supply			—	208/230V ~60Hz				208/230V ~60Hz		
Size of Connection Pipe	AHU-KIT (ex-factory pipe size)		mm	Φ9.52	Φ9.52	Φ9.52	Φ9.52	Φ15.9	Φ15.9	Φ15.9
			inch	Φ3/8	Φ3/8	Φ3/8	Φ3/8	Φ5/8	Φ5/8	Φ5/8
	Air Handling Unit	Liquid Pipe	mm	Φ9.52	Φ9.52	Φ12.7	Φ12.7	Φ15.9	Φ15.9	Φ19.05
			inch	Φ3/8	Φ3/8	Φ1/2	Φ1/2	Φ5/8	Φ5/8	Φ3/4
		Gas Pipe	mm	Φ19.05	Φ22.2	Φ28.6	Φ28.6	Φ28.6	Φ28.6	Φ34.9
			inch	Φ3/4	Φ7/8	Φ1-1/8	Φ1-1/8	Φ1-1/8	Φ1-1/8	Φ1-3/8
	Connection method			Brazing Connection				Brazing Connection		

Model			GMV-N96U/A-T(U)	GMV-N192U/A-T(U)
Outline Dimension (W×D×H)	EXV Box	mm	203×326×85	246×500×120
		inch	8×12-7/8×3-3/8	9-5/8×19-5/8×4-3/4
	Control Box	mm	334×284×111	334×284×111
		inch	13-1/8×11-1/8×4-3/8	13-1/8×11-1/8×4-3/8
Net Weight	kg		9.5	13
	LBS		21	29

Model(Combined)				GMV-N48U/A-T(U)+GMV-N192U/A-T(U)
Capacity				48+288
Cooling			kW	98.48
Cooling			kBtu/h	336
Heating			kW	110.79
Heating			kBtu/h	378
Power Input			W	5.0+5.0
Power Supply			—	208/230V ~60Hz
Size of Connection Pipe	Air Handling Unit	Liquid Pipe	mm	Φ19.05
			inch	Φ3/4
		Gas Pipe	mm	Φ34.9
			inch	Φ1-3/8
Outline Dimension (W×D×H)	Electronic Expansion Valve Box		mm	(203×326×85)+(246×500×120)
			inch	(8×12-7/8×3-3/8)+(9-5/8×19-5/8×4-3/4)
	Control Box		mm	(334×284×111)×2
			inch	(13-1/8×11-1/8×4-3/8)×2
Net Weight			kg	9.5+13
			LBS	21+29

Model			GMV-N12U/C-T(U)		GMV-N24U/C-T(U)			GMV-N48U/C-T(U)			
Defaulted capacity of ex-factory	Capacity		12		24			48			
	Cooling	kW	3.5		7.0			14.1			
	Cooling	kBtu/h	12.0		24.0			48.0			
	Heating	kW	4.0		7.9			15.8			
	Heating	kBtu/h	13.5		27.0			54.0			
Adjustable capacity	Capacity		9	12	15	18	24	30	36	48	60
	Cooling	kW	2.6	3.5	4.4	5.3	7.0	8.8	10.6	14.1	17.6
	Cooling	kBtu/h	9.5	12.0	15.0	18.0	24.0	30.0	36.0	48.0	60.0
	Heating	kW	3.1	4.0	5.0	5.9	7.9	10.0	11.7	15.8	19.7
	Heating	kBtu/h	10.5	13.5	17.0	20.0	27.0	34.0	40.0	54.0	67.0
Power input		W	8.0		8.0			8.0			
Power Supply		—	208/230V ~60Hz		208/230V ~60Hz			208/230V ~60Hz			
Size of connection pipe	AHU-KIT (ex-factory pipe size)	mm	Φ6.35	Φ6.35	Φ9.52	Φ9.52	Φ9.52	Φ9.52	Φ9.52	Φ9.52	Φ9.52
		inch	Φ1/4	Φ1/4	Φ3/8	Φ3/8	Φ3/8	Φ3/8	Φ3/8	Φ3/8	Φ3/8
	Air handling unit, Liquid pipe	mm	Φ6.35	Φ6.35	Φ6.35	Φ9.52	Φ9.52	Φ9.52	Φ9.52	Φ9.52	Φ9.52
		inch	Φ1/4	Φ1/4	Φ1/4	Φ3/8	Φ3/8	Φ3/8	Φ3/8	Φ3/8	Φ3/8
	Air handling unit, Gas pipe	mm	Φ9.52	Φ12.7	Φ12.7	Φ15.9	Φ15.9	Φ15.9	Φ15.9	Φ15.9	Φ19.05
		inch	Φ3/8	Φ1/2	Φ1/2	Φ5/8	Φ5/8	Φ5/8	Φ5/8	Φ5/8	Φ3/4
	Connection method		Brazing Connection		Brazing Connection			Brazing Connection			
Outline dimension (W×D×H)	EXV box	mm	203×326×85		203×326×85			203×326×85			
		inch	8×12-7/8×3-3/8		8×12-7/8×3-3/8			8×12-7/8×3-3/8			
	Control box	mm	334×284×111		334×284×111			334×284×111			
		inch	13-1/8×11-1/8×4-3/8		13-1/8×11-1/8×4-3/8			13-1/8×11-1/8×4-3/8			
Net weight	kg		10.0		10.5			10.5			
	LBS		22		23			23			

Model				GMV-N96U/C-T(U)				GMV-N192U/C-T(U)		
Defaulted capacity of ex-factory	Capacity			96				192		
	Cooling		kW	28.1				56.3		
	Cooling		kBtu/h	96.0				192.0		
	Heating		kW	31.7				63.3		
	Heating		kBtu/h	108.0				216.0		
Adjustable capacity	Capacity			72	96	120	144	168	192	288
	Cooling		kW	21.1	28.1	35.2	42.2	49.2	56.3	84.4
	Cooling		kBtu/h	72	96	120	144	168	192	288
	Heating		kW	23.7	31.7	39.6	47.5	55.4	63.3	95.0
	Heating		kBtu/h	81	108	135	162	189	216	324
Power input			W	8.0				8.0		
Power Supply			—	208/230V ~60Hz				208/230V ~60Hz		
Size of connection pipe	AHU-KIT (ex-factory pipe size)		mm	Φ9.52	Φ9.52	Φ9.52	Φ9.52	Φ15.9	Φ15.9	Φ15.9
			inch	Φ3/8	Φ3/8	Φ3/8	Φ3/8	Φ5/8	Φ5/8	Φ5/8
	Air handling unit	Liquid pipe	mm	Φ9.52	Φ9.52	Φ12.7	Φ12.7	Φ15.9	Φ15.9	Φ19.05
			inch	Φ3/8	Φ3/8	Φ1/2	Φ1/2	Φ5/8	Φ5/8	Φ3/4
		Gas pipe	mm	Φ19.05	Φ22.2	Φ28.6	Φ28.6	Φ28.6	Φ28.6	Φ34.9
			inch	Φ3/4	Φ7/8	Φ1-1/8	Φ1-1/8	Φ1-1/8	Φ1-1/8	Φ1-3/8
	Connection method			Brazing Connection				Brazing Connection		
Outline dimension (W×D×H)	EXV box		mm	203×326×85				246×500×120		
			inch	8×12-7/8×3-3/8				9-5/8×19-5/8×4-3/4		
	Control box		mm	334×284×111				334×284×111		
			inch	13-1/8×11-1/8×4-3/8				13-1/8×11-1/8×4-3/8		
Net weight	kg			10.5				13.0		
	LBS			23				29		

Model(Combined)				GMV-N48U/C-T(U) +GMV-N192U/C-T(U)	GMV-N96U/C-T(U) +GMV-N192U/C-T(U)	GMV-N192U/C-T(U) +GMV-N192U/C-T(U)	
Capacity				48+288	96+288	192+288	288+288
Cooling			kW	98.5	112.5	140.7	168.8
Cooling			kBtu/h	336	384	480	576
Heating			kW	110.8	126.6	158.3	189.9
Heating			kBtu/h	378	432	540	648
Power input			W	8.0+8.0	8.0+8.0	8.0+8.0	
Power supply			—	208/230V ~60Hz	208/230V ~60Hz	208/230V ~60Hz	
Size of connection pipe	Air handling unit	Liquid pipe	mm	Φ19.05	Φ19.05	Φ19.05	Φ19.05
			inch	Φ3/4	Φ3/4	Φ3/4	Φ3/4
		Gas pipe	mm	Φ34.9	Φ41.3	Φ41.3	Φ41.3
			inch	Φ1-3/8	Φ1-5/8	Φ1-5/8	Φ1-5/8
Outline dimension (W×D×H)	Electronic expansion valve box		mm	(203×326×85) +(246×500×120)	(203×326×85) +(246×500×120)	(246×500×120)×2	
			inch	(8×12-7/8×3-3/8) +(9-5/8×19-5/8×4-3/4)	(8×12-7/8×3-3/8) +(9-5/8×19-5/8×4-3/4)	(9-5/8×19-5/8×4-3/4)×2	
	Control box		mm	(334×284×111)×2	(334×284×111)×2	(334×284×111)×2	
			inch	(13-1/8×11-1/8×4-3/8)×2	(13-1/8×11-1/8×4-3/8)×2	(13-1/8×11-1/8×4-3/8)×2	
Net weight			kg	10.5+13.0	10.5+13.0	13.0+13.0	
			LBS	23+29	23+29	29+29	

4.14 1-way Cassette Type Indoor Unit

Model			GMV-ND07TD/A-T(U)	GMV-ND09TD/A-T(U)	GMV-ND12TD/A-T(U)
Product Code			CM502N0152	CM502N0162	CM502N0182
Cooling Capacity		Btu/h	7500	9500	12000
		kW	2.2	2.8	3.6
Heating Capacity		Btu/h	8500	10500	13500
		kW	2.5	3.2	4
Casing Finish			Galvanized Steel plate		
Dimensions (W×D×H)	Body Outline	mm	987×385×178	987×385×178	987×385×178
		inch	38-7/8×15-3/16×7	38-7/8×15-3/16×7	38-7/8×15-3/16×7
	Body Packaging	mm	1307×501×310	1307×501×310	1307×501×310
		inch	51-1/2×19-3/4×12-3/16	51-1/2×19-3/4×12-3/16	51-1/2×19-3/4×12-3/16
	Panel Outline	mm	1200×460×55	1200×460×55	1200×460×55
		inch	47-1/4×18-1/8×2-3/16	47-1/4×18-1/8×2-3/16	47-1/4×18-1/8×2-3/16
	Panel Packaging	mm	1265×536×118	1265×536×118	1265×536×118
		inch	49-13/16×21-1/8×4-3/4	49-13/16×21-1/8×4-3/4	49-13/16×21-1/8×4-3/4
Net Weigh	Main Body	LBS	44	44	44
		kg	20	20	20
	Panel	LBS	9.3	9.3	9.3
		kg	4.2	4.2	4.2
Gross Weigh	Main Body	LBS	60	60	60
		kg	27	27	27
	Panel	LBS	13.2	13.2	13.2
		kg	6	6	6
Pipe Connections	Liquid Side	mm	Φ6.35	Φ6.35	Φ6.35
		inch	Φ1/4	Φ1/4	Φ1/4
	Gas Side	mm	Φ9.52	Φ9.52	Φ12.7
		inch	Φ3/8	Φ3/8	Φ1/2
	Drain Pipe	mm	Φ25	Φ25	Φ25
		inch	Φ1	Φ1	Φ1
Power Supply			1-phase 208/230V 60Hz		
Fan	Type × Quantity		Cross-flow	Cross-flow	Cross-flow
	Driving Mechanism		Direct-driven	Direct-driven	Direct-driven
	Motor Type		BLDC	BLDC	BLDC
	Motor Power Input	W	30	30	30
	Motor Running Current	A	0.2	0.2	0.2
	Airflow Rate(H/M/L)	CFM	353/294/265	353/294/265	353/294/265
		m³/h	600/500/450	600/500/450	600/500/450
Sound Pressure Level(H/M/L)		dB(A)	36/32/28	36/32/28	36/32/28
Heat Exchanger			Fenestrate plain film --hydrophilic film		
Air Filter			PP	PP	PP
Insulation Material			Foamed polystyrene	Foamed polystyrene	Foamed polystyrene
Refrigeration Control Device			EXV	EXV	EXV
Protection Device			Fuse	Fuse	Fuse
Panel Name			TD01	TD01	TD01

4.15 General Static Pressure Duct Type Indoor Unit

Model				GMV-ND30PLS/C-T(U)	GMV-ND36PLS/C-T(U)	GMV-ND42PLS/C-T(U)	GMV-ND48PLS/C-T(U)
Product Code				CM810N2020	CM810N2010	CM810N2000	CM810N1990
Cooling Capacity			Btu/h	30000	36000	42000	48000
			kW	8.8	10.6	12.3	14.1
Heating Capacity			Btu/h	34000	40000	47000	54000
			kW	10.0	11.7	13.8	15.8
Casing Finish				Galvanized Steel plate			
Dimensions (W×D×H)	Outline		mm	1340×655×260	1340×655×260	1340×655×260	1340×655×260
			inch	52-3/4×25-13/16×10-1/4	52-3/4×25-13/16×10-1/4	52-3/4×25-13/16×10-1/4	52-3/4×25-13/16×10-1/4
	Packaging		mm	1588×858×315	1588×858×315	1588×858×315	1588×858×315
			inch	62-1/2×33-3/4×12-3/8	62-1/2×33-3/4×12-3/8	62-1/2×33-3/4×12-3/8	62-1/2×33-3/4×12-3/8
Net Weight			LBS	100	100	102	102
			kg	45.5	45.5	46.5	46.5
Gross Weight			LBS	120	120	122	122
			kg	54.5	54.5	55.5	55.5
Pipe Connection	Liquid Side		mm	Φ9.52	Φ9.52	Φ9.52	Φ9.52
			inch	Φ3/8	Φ3/8	Φ3/8	Φ3/8
	Gas Side		mm	Φ15.9	Φ15.9	Φ15.9	Φ15.9
			inch	Φ5/8	Φ5/8	Φ5/8	Φ5/8
	Drain Pipe		mm	Φ25	Φ25	Φ25	Φ25
			inch	Φ2.5	Φ2.5	Φ2.5	Φ2.5
Power supply				1-phase 208/230V 60Hz			
Fan	Type × Quantity			Centrifugal×3	Centrifugal×3	Centrifugal×3	Centrifugal×3
	Driving Mechanism			Direct-driven			
	Motor Type			BLDC			
	Motor Power Input		W	130	130	170	170
	Motor Running Current		A	2.4	2.4	2.4	2.4
	Airflow Rate(H/M/L)		CFM	880/735/530	1000/880/650	1180/1000/825	1180/1000/825
			m³/h	1500/1250/900	1700/1500/1100	2000/1700/1400	2000/1700/1400
	External Static Pressure	Default	In.W.G	0.2	0.2	0.2	0.2
			Pa	50	50	50	50
		Range	In.W.G	0~0.32	0~0.32	0~0.32	0~0.32
			Pa	0~80	0~80	0~80	0~80
Sound Pressure Level(H/M/L)			dB(A)	40/36/32	40/36/32	42/40/37	42/40/37
Heat Exchanger				Fenestrate plain film --hydrophilic film			
Air Filter				PP			
Refrigeration Control Device				EXV			
Protection Device				Fuse			

4.16 360°Air Discharge Compact Cassette Type Indoor Unit

Model			GMV-ND05T/E-T(U)	GMV-ND07T/E-T(U)	GMV-ND09T/E-T(U)
Product Code			CM500N1600	CM500N1590	CM500N1620
Cooling Capacity		Btu/h	5800	7500	9500
		kW	1.7	2.2	2.8
Heating Capacity		Btu/h	6200	8500	10500
		kW	1.8	2.5	3.1
Casing Finish			Galvanized Steel plate		
Dimensions (W×D×H)	Body Outline	mm	570×570×265	570×570×265	570×570×265
		inch	22-7/16×22-7/16×10-7/16	22-7/16×22-7/16×10-7/16	22-7/16×22-7/16×10-7/16
	Body Packaging	mm	698×653x295	698×653x295	698×653x295
		inch	27-1/2×25-11/16×11-5/8	27-1/2×25-11/16×11-5/8	27-1/2×25-11/16×11-5/8
	Panel Outline	mm	620×620×47.5	620×620×47.5	620×620×47.5
		inch	24-3/8×24-3/8×1-7/8	24-3/8×24-3/8×1-7/8	24-3/8×24-3/8×1-7/8
	Panel Packaging	mm	701×701×125	701×701×125	701×701×125
		inch	27-5/8×27-5/8×5	27-5/8×27-5/8×5	27-5/8×27-5/8×5
Net Weigh	Main Body	LBS	38.6	38.6	38.6
		kg	17.5	17.5	17.5
	Panel	LBS	6.6	6.6	6.6
		kg	3.0	3.0	3.0
Gross Weigh	Main Body	LBS	49.6	49.6	49.6
		kg	22.5	22.5	22.5
	Panel	LBS	10	10	10
		kg	4.5	4.5	4.5
Pipe Connections	Liquid Side	mm	Φ6.35	Φ6.35	Φ6.35
		inch	Φ1/4	Φ1/4	Φ1/4
	Gas Side	mm	Φ9.52	Φ9.52	Φ9.52
		inch	Φ3/8	Φ3/8	Φ3/8
	Drain Pipe	mm	Φ25	Φ25	Φ25
		inch	Φ1	Φ1	Φ1
Power Supply			1-phase 208/230V 60Hz		
Fan	Type × Quantity		Centrifugal×1	Centrifugal×1	Centrifugal×1
	Driving Mechanism		Direct-driven	Direct-driven	Direct-driven
	Motor Type		BLDC	BLDC	BLDC
	Motor Power Input	W	35	35	35
	Motor Running Current	A	0.3	0.3	0.3
	Airflow Rate(H/M/L)	CFM	270/250/220	295/270/220	335/280/250
		m³/h	460/420/370	500/460/370	570/480/420
Sound Pressure Level(H/M/L)		dB(A)	33/30/25	36/31/25	36/33/28
Heat Exchanger			Fenestrate plain film --hydrophilic film		
Air Filter			PP	PP	PP
Insulation Material			Foamed polystyrene	Foamed polystyrene	Foamed polystyrene
Refrigeration Control Device			EXV	EXV	EXV
Protection Device			Fuse	Fuse	Fuse
Panel Name			TF05	TF05	TF05

Model			GMV-ND12T/E-T(U)	GMV-ND15T/E-T(U)	GMV-ND18T/E-T(U)
Product Code			CM500N1580	CM500N1610	CM500N1570
Cooling Capacity		Btu/h	12000	15000	18000
		kW	3.5	4.4	5.3
Heating Capacity		Btu/h	13500	17000	20000
		kW	4	5	5.9
Casing Finish			Galvanized Steel plate		
Dimensions (W×D×H)	Body Outline	mm	570×570×265	570×570×265	570×570×265
		inch	22-7/16×22-7/16×10-7/16	22-7/16×22-7/16×10-7/16	22-7/16×22-7/16×10-7/16
	Body Packaging	mm	698×653x295	698×653x295	698×653x295
		inch	27-1/2×25-11/16×11-5/8	27-1/2×25-11/16×11-5/8	27-1/2×25-11/16×11-5/8
	Panel Outline	mm	620×620×47.5	620×620×47.5	620×620×47.5
		inch	24-3/8×24-3/8×1-7/8	24-3/8×24-3/8×1-7/8	24-3/8×24-3/8×1-7/8
	Panel Packaging	mm	701×701×125	701×701×125	701×701×125
		inch	27-5/8×27-5/8×5	27-5/8×27-5/8×5	27-5/8×27-5/8×5
Net Weigh	Main Body	LBS	38.6	38.6	38.6
		kg	17.5	17.5	17.5
	Panel	LBS	6.6	6.6	6.6
		kg	3.0	3.0	3.0
Gross Weigh	Main Body	LBS	49.6	49.6	49.6
		kg	22.5	22.5	22.5
	Panel	LBS	10	10	10
		kg	4.5	4.5	4.5
Pipe Connections	Liquid Side	mm	Φ6.35	Φ6.35	Φ9.52
		inch	Φ1/4	Φ1/4	Φ3/8
	Gas Side	mm	Φ12.7	Φ12.7	Φ15.9
		inch	Φ1/2	Φ1/2	Φ5/8
	Drain Pipe	mm	Φ25	Φ25	Φ25
		inch	Φ1	Φ1	Φ1
Power Supply			1-phase 208/230V 60Hz		
Fan	Type × Quantity		Centrifugal×1	Centrifugal×1	Centrifugal×1
	Driving Mechanism		Direct-driven	Direct-driven	Direct-driven
	Motor Type		BLDC	BLDC	BLDC
	Motor Power Input	W	46	46	46
	Motor Running Current	A	0.4	0.4	0.4
	Airflow Rate(H/M/L)	CFM	365/325/280	430/385/330	430/385/330
		m³/h	620/550/480	730/650/560	730/650/560
Sound Pressure Level(H/M/L)		dB(A)	39/37/35	43/41/39	43/41/39
Heat Exchanger			Fenestrate plain film --hydrophilic film		
Air Filter			PP	PP	PP
Insulation Material			Foamed polystyrene	Foamed polystyrene	Foamed polystyrene
Refrigeration Control Device			EXV	EXV	EXV
Protection Device			Fuse	Fuse	Fuse
Panel Name			TF05	TF05	TF05

4.17 360°Air Discharge Cassette Type Indoor Unit

Model			GMV-ND07T/C-T(U)	GMV-ND09T/C-T(U)	GMV-ND12T/C-T(U)	GMV-ND15T/C-T(U)	GMV-ND18T/C-T(U)
Product Code			CM500N1560	CM500N1480	CM500N1530	CM500N1460	CM500N1470
Cooling Capacity		Btu/h	7500	9500	12000	15000	18000
		kW	2.2	2.8	3.5	4.4	5.3
Heating Capacity		Btu/h	8500	10500	13500	17000	20000
		kW	2.5	3.1	4.0	5	5.9
Casing Finish			Galvanized Steel plate				
Dimensions (W×D×H)	Body Outline	mm	840×840×240	840×840×240	840×840×240	840×840×240	840×840×240
		inch	33-1/8×33-1/8×9-1/2	33-1/8×33-1/8×9-1/2	33-1/8×33-1/8×9-1/2	33-1/8×33-1/8×9-1/2	33-1/8×33-1/8×9-1/2
	Body Packaging	mm	963×963×325	963×963×325	963×963×325	963×963×325	963×963×325
		inch	37-7/8×37-7/8×12-3/4	37-7/8×37-7/8×12-3/4	37-7/8×37-7/8×12-3/4	37-7/8×37-7/8×12-3/4	37-7/8×37-7/8×12-3/4
	Panel Outline	mm	950×950×65	950×950×65	950×950×65	950×950×65	950×950×65
		inch	37-3/8×37-3/8×2-1/2	37-3/8×37-3/8×2-1/2	37-3/8×37-3/8×2-1/2	37-3/8×37-3/8×2-1/2	37-3/8×37-3/8×2-1/2
	Panel Packaging	mm	1033×1020×110	1033×1020×110	1033×1020×110	1033×1020×110	1033×1020×110
		inch	40-7/8×40-5/8×4-3/8	40-7/8×40-5/8×4-3/8	40-7/8×40-5/8×4-3/8	40-7/8×40-5/8×4-3/8	40-7/8×40-5/8×4-3/8
Net Weigh	Main Body	LBS	64	64	64	64	64
		kg	29	29	29	29	29
	Panel	LBS	13	13	13	13	13
		kg	6	6	6	6	6
Gross Weigh	Main Body	LBS	82	82	82	82	82
		kg	37	37	37	37	37
	Panel	LBS	21	21	21	21	21
		kg	9.5	9.5	9.5	9.5	9.5
Pipe Connections	Liquid Side	mm	Φ6.35	Φ6.35	Φ6.35	Φ6.35	Φ9.52
		inch	Φ1/4	Φ1/4	Φ1/4	Φ1/4	Φ3/8
	Gas Side	mm	Φ9.52	Φ9.52	Φ12.7	Φ12.7	Φ15.9
		inch	Φ3/8	Φ3/8	Φ1/2	Φ1/2	Φ5/8
	Drain Pipe	mm	Φ25	Φ25	Φ25	Φ25	Φ25
		inch	Φ1	Φ1	Φ1	Φ1	Φ1
Power supply			1-phase 208/230V 60Hz				
Fan	Type × Quantity		Centrifugal×1	Centrifugal×1	Centrifugal×1	Centrifugal×1	Centrifugal×1
	Driving Mechanism		Direct-driven	Direct-driven	Direct-driven	Direct-driven	Direct-driven
	Motor Type		BLDC	BLDC	BLDC	BLDC	BLDC
	Motor Running Current	A	0.6	0.6	0.6	0.6	0.7
	Airflow Rate(H/M/L)	CFM	470/410/355	470/410/355	470/410/355	470/410/355	560/500/440
		m³/h	800/700/600	800/700/600	800/700/600	800/700/600	950/850/750
Sound Pressure Level(H/M/L)		dB(A)	34/32/30	34/32/30	34/32/30	34/32/30	38/36/33
Heat Exchanger			Fenestrate plain film --hydrophilic film				
Air Filter			PP	PP	PP	PP	PP
Insulation Material			Foamed polystyrene	Foamed polystyrene	Foamed polystyrene	Foamed polystyrene	Foamed polystyrene
Refrigeration Control Device			EXV	EXV	EXV	EXV	EXV
Protection Device			Fuse	Fuse	Fuse	Fuse	Fuse
Panel Name			TF06	TF06	TF06	TF06	TF06

Model			GMV-ND22T/C-T(U)	GMV-ND24T/C-T(U)	GMV-ND30T/C-T(U)	GMV-ND36T/C-T(U)	GMV-ND42T/C-T(U)	GMV-ND48T/C-T(U)	GMV-ND54T/C-T(U)
Product Code			CM500N1520	CM500N1490	CM500N1550	CM500N1500	CM500N1450	CM500N1540	CM500N1870
Cooling Capacity		Btu/h	22000	24000	30000	36000	42000	48000	54000
		kW	6.4	7	8.8	10.6	12.3	14.1	15.8
Heating Capacity		Btu/h	24000	27000	34000	40000	47000	54000	60000
		kW	7	7.9	10	11.7	13.8	15.8	17.6
Casing Finish			Galvanized Steel plate						
Dimensions (W×D×H)	Body Outline	mm	840×840×240	840×840×240	840×840×290	840×840×290	840×840×290	840×840×290	840×840×290
		inch	33-1/8×33-1/8×9-1/2	33-1/8×33-1/8×9-1/2	33-1/8×33-1/8×11-3/8	33-1/8×33-1/8×11-3/8	33-1/8×33-1/8×11-3/8	33-1/8×33-1/8×11-3/8	33-1/8×33-1/8×11-3/8
	Body Packaging	mm	963×963×325	963×963×325	963×963×379	963×963×379	963×963×379	963×963×379	963×963×379
		inch	37-7/8×37-7/8×12-3/4	37-7/8×37-7/8×12-3/4	37-7/8×37-7/8×14-7/8	37-7/8×37-7/8×14-7/8	37-7/8×37-7/8×14-7/8	37-7/8×37-7/8×14-7/8	37-7/8×37-7/8×14-7/8
	Panel Outline	mm	950×950×65	950×950×65	950×950×65	950×950×65	950×950×65	950×950×65	950×950×65
		inch	37-3/8×37-3/8×2-1/2	37-3/8×37-3/8×2-1/2	37-3/8×37-3/8×2-1/2	37-3/8×37-3/8×2-1/2	37-3/8×37-3/8×2-1/2	37-3/8×37-3/8×2-1/2	37-3/8×37-3/8×2-1/2
	Panel Packaging	mm	1033×1020×110	1033×1020×110	1033×1020×110	1033×1020×110	1033×1020×110	1033×1020×110	1033×1020×110
		inch	40-7/8×40-5/8×4-3/8	40-7/8×40-5/8×4-3/8	40-7/8×40-5/8×4-3/8	40-7/8×40-5/8×4-3/8	40-7/8×40-5/8×4-3/8	40-7/8×40-5/8×4-3/8	40-7/8×40-5/8×4-3/8
Net Weight	Main Body	LBS	64	64	73	73	73	73	79
		kg	29	29	33	33	33	33	36
	Panel	LBS	13	13	13	13	13	13	13
		kg	6	6	6	6	6	6	6
Gross Weight	Main Body	LBS	82	82	93	93	93	93	97
		kg	37	37	42	42	42	42	44
	Panel	LBS	21	21	21	21	21	21	21
		kg	9.5	9.5	9.5	9.5	9.5	9.5	9.5
Pipe Connections	Liquid Side	mm	Φ9.52	Φ9.52	Φ9.52	Φ9.52	Φ9.52	Φ9.52	Φ9.52
		inch	Φ3/8	Φ3/8	Φ3/8	Φ3/8	Φ3/8	Φ3/8	Φ3/8
	Gas Side	mm	Φ15.9	Φ15.9	Φ15.9	Φ15.9	Φ15.9	Φ15.9	Φ19.05
		inch	Φ5/8	Φ5/8	Φ5/8	Φ5/8	Φ5/8	Φ5/8	Φ3/4
	Drain Pipe	mm	Φ25	Φ25	Φ25	Φ25	Φ25	Φ25	Φ25
		inch	Φ1	Φ1	Φ1	Φ1	Φ1	Φ1	Φ2.5
Power Supply			1-phase 208/230V 60Hz						

Model			GMV-ND22T/C-T(U)	GMV-ND24T/C-T(U)	GMV-ND30T/C-T(U)	GMV-ND36T/C-T(U)	GMV-ND42T/C-T(U)	GMV-ND48T/C-T(U)	GMV-ND54T/C-T(U)
Fan	Type × Quantity		Centrifugal×1	Centrifugal×1	Centrifugal×1	Centrifugal×1	Centrifugal×1	Centrifugal×1	Centrifugal×1
	Driving Mechanism		Direct-driven	Direct-driven	Direct-driven	Direct-driven	Direct-driven	Direct-driven	Direct-driven
	Motor Type		BLDC	BLDC	BLDC	BLDC	BLDC	BLDC	BLDC
	Motor Running Current	A	0.7	0.7	0.8	1.0	1.5	1.5	1.5
	Airflow Rate (H/M/L)	CFM	560/500/440	675/560/500	735/590/530	885/705/590	970/765/645	970/765/645	1180/1060/840
		m^3/h	950/850/750	1150/950/850	1250/1000/900	1500/1200/1000	1650/1300/1100	1650/1300/1100	2000/1800/1430
Sound Pressure Level(H/M/L)		dB(A)	38/36/33	38/36/34	39/37/34	43/39/37	45/41/39	45/41/39	51/48/42
Heat Exchanger			Fenestrate plain film --hydrophilic film						
Air Filter			PP	PP	PP	PP	PP	PP	PP
Insulation Material			Foamed polystyrene	Foamed polystyrene	Foamed polystyrene	Foamed polystyrene	Foamed polystyrene	Foamed polystyrene	Foamed polystyrene
Refrigeration Control Device			EXV	EXV	EXV	EXV	EXV	EXV	EXV
Protection Device			Fuse	Fuse	Fuse	Fuse	Fuse	Fuse	Fuse
Panel Name			TF06	TF06	TF06	TF06	TF06	TF06	TF06

CONTROL

CHAPTER 2 CONTROL

1 Operation Flowchart

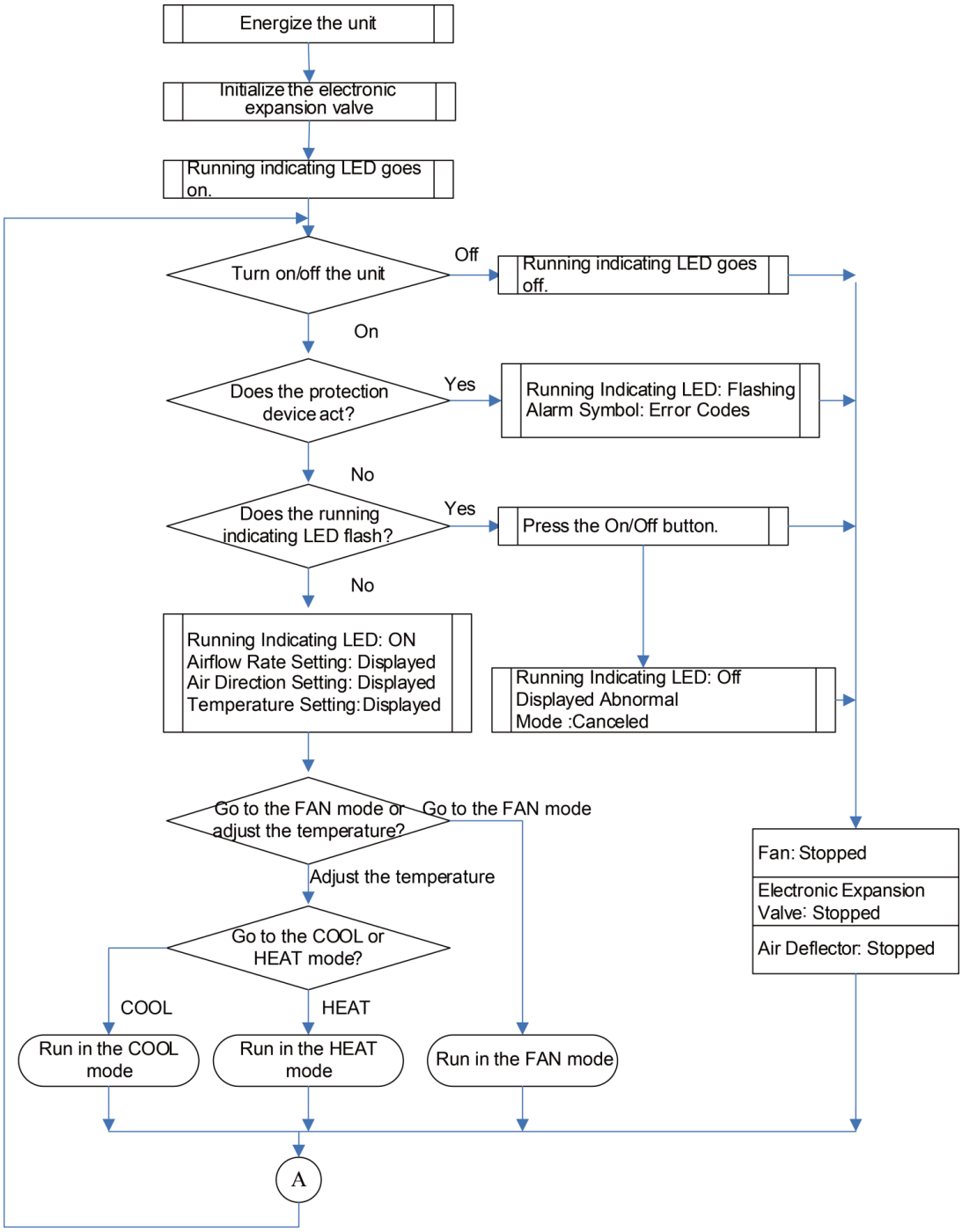

2 Wired Controller

2.1 Control Panel

2.1.1 XK46 Wired Controller

Fig.2.1.1 Appearance of wired controller

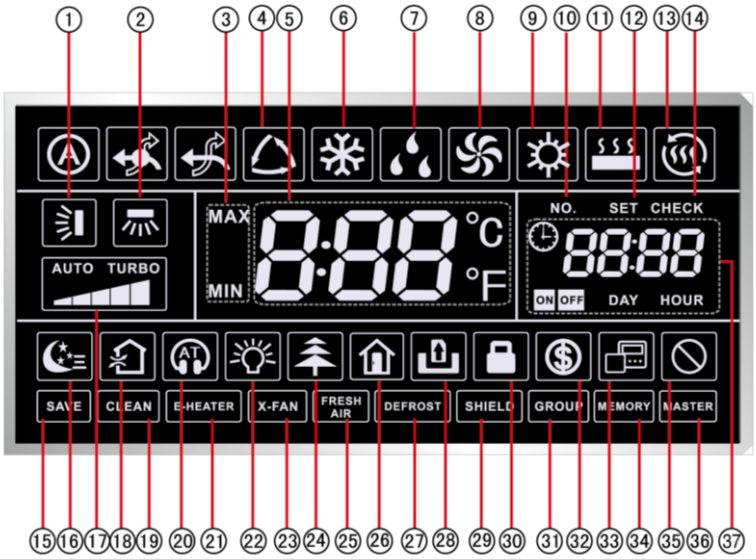

Fig.2.1.2 LED graphics of wired controller

Table 2.1 LED display instruction

No.	Symbols	Instructions
1		Up and down swing function
2	*	Left and right swing function
3	MAX MIN	It's valid under Save mode and displays during setting process Temperature lower limit for Cooling: Limit the minimum temperature value under Cooling or Dry mode Temperature upper limit for Heating: Limit the maximum temperature value under Heating, Space Heating or 3D Heating mode
4	*	Auto mode (Under Auto mode, the indoor units will automatically select their operating mode as per the temperature change so as to make the ambient comfortable)
5	8.88 °C °F	It shows the setting temperature value(In case the wired controller is controlling a Fresh Air Indoor Unit, then the temperature zone will display FAP)
6		Cooling mode
7		Dry mode
8		Fan mode
9		Heating mode
10	NO.	When inquiring or setting project number of indoor unit, it displays "NO." icon
11	*	Floor Heating mode (When Heating and Floor Heating simultaneously shows up, it indicates 3D Heating is activated)
12	SET	Display "SET" icon under parameter setting interface
13	*	Space Heating mode
14	CHECK	Display "CHECK" icon under parameter view interface
15	SAVE	Outdoor unit operates under Save mode/upper limit of system capacitor less 100%/remote Save status
16		Sleep status
17	AUTO TURBO	Current set fan speed (including auto, low speed, medium-low speed, medium speed, medium-high speed, high speed and turbo seven status)
18	*	Air status, Indoor unit optional function
19	CLEAN	Remind to clean the filter
20	AT	Quiet status (including Quiet and Auto Quiet two status)
21	E-HEATER *	Allow auxiliary electric heating On icon
22		Light On/Off function
23	X-FAN	X-fan function

No.	Symbols	Instructions
24	*	Health function, Indoor unit optional function
25	FRESH AIR *	Reserved function
26		Out function
27	DEFROST	Outdoor unit defrosting status
28		Gate-control function
29	SHIELD	Shielding status
30		Child Lock status
31	GROUP	One wired controller controls multiple indoor units
32		Save status of indoor unit
33		It indicates the current wired controller is the slave wired controller (address of wired controller is 02)
34	MEMORY	Memory status (The indoor unit resumes the original setting state after power failure and then power recovery)
35		Invalid operation
36	MASTER	Current wired controller connects master indoor unit
37	88:88 ON OFF DAY HOUR	Timer zone: Display system clock and timer status
NOTICE! When wired controller is connected with different indoor units, some functions will be different		

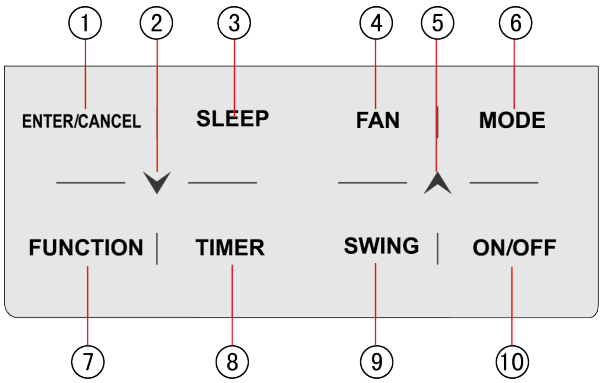

Fig.2.1.3 Button graphics

Function instruction of buttons

No.	Buttons	Instructions
1	ENTER/CANCEL	Select and cancel function
2	⮟	Set operating temperature of indoor unit Set Timer Switch Quiet mode, Air grade, Clean grade, set upper and lower temperature limit under Save mode Set and inquiry parameter
5	⮝	
3	SLEEP	Set Sleep mode
4	FAN	Switch among auto, low speed, low-medium speed, medium speed, medium-high speed, high speed and turbo status
6	MODE	Switch Auto, Cooling, Dry, Fan, Heating, Floor Heating, 3D Heating and Space Heating modes for indoor unit. (NOTICE! The Floor Heating, 3D Heating and Space Heating function icon will show up when the unit has those functions)
7	FUNCTION	Switch among Air, Quiet, Light, Health, Absence, Save, Clean, E-heater and X-fan functions.
8	TIMER	Timer setting
9	SWING	Set up and down swing status
10	ON/OFF	Indoor unit On/Off
2+5	⮝+⮟	Simultaneously press "⮝" and "⮟" for 5s to enter or cancel the Child Lock function

2.1.2 XK79 Wired Controller

Appearance of wired controller

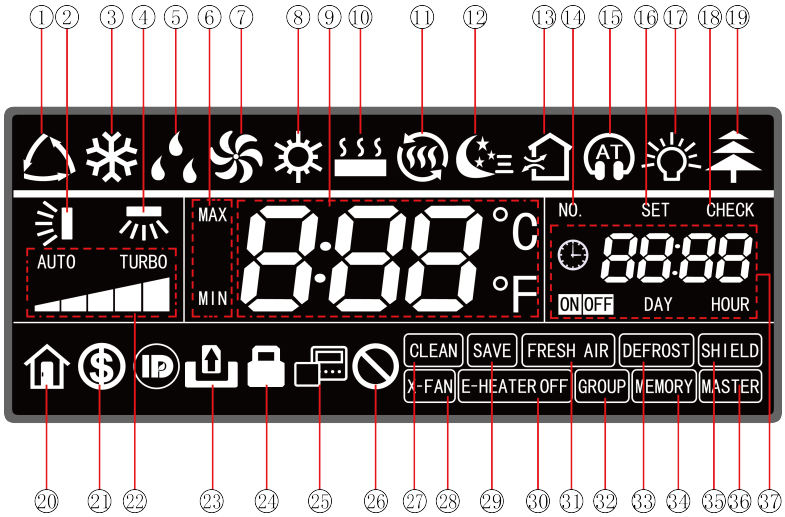

LED graphics of wired controller

Table LCD display instruction

No.	Symbols	Instructions
1	*	Auto mode (Under Auto mode, the indoor units will automatically select their operating mode as per the temperature change so as to make the ambient comfortable.)
2		Up and down swing function
3		Cooling mode
4	*	Left and right swing function
5		Dry mode
6	MAX MIN	It's valid under Save mode and displays during setting process. Temperature lower limit for Cooling: Limit the minimum temperature value under Cooling or Dry mode. Temperature upper limit for Heating: Limit the maximum temperature value under Heating, Space Heating or 3D Heating mode.
7		Fan mode

No.	Symbols	Instructions
8		Heating mode
9		It shows the setting temperature value (In case the wired controller is controlling a Fresh Air Indoor Unit, then the temperature zone will display FAP)
10	*	Floor Heating mode (When Heating and Floor Heating simultaneously shows up, it indicates 3D Heating is activated.)
11	*	Space Heating mode
12		Sleep status
13	*	Air status, Indoor unit optional function
14	NO.	When inquiring or setting project number of indoor unit, it displays "NO." icon
15		Quiet status (including Quiet and Auto Quiet two status)
16	SET	Display "SET" icon under parameter setting interface
17		Light On/Off function
18	CHECK	Display "CHECK" icon under parameter view interface
19	*	Health function, Indoor unit optional function
20		Absence function
21		Save status of indoor unit
22	AUTO TURBO	Current set fan speed (including auto, low speed, medium-low speed, medium speed, medium-high speed, high speed and turbo seven status)
23		Gate-control function
24		Child Lock status
25		It indicates the current wired controller is the slave wired controller (address of wired controller is 02)
26		Invalid operation
27	CLEAN	Remind to clean the filter
28	X-FAN	X-fan function
29	SAVE	Outdoor unit operates under Save mode/upper limit of system capacitor less 100%/remote Save status
30	E-HEATER *	Allow auxiliary electric heating On icon
31	FRESH AIR	Reserved function
32	GROUP	One wired controller controls multiple indoor units
33	DEFROST	Outdoor unit defrosting status
34	MEMORY	Memory status (The indoor unit resumes the original setting state after power failure and then power recovery)
35	SHIELD	Shielding status
36	MASTER	Current wired controller connects master indoor unit
37	88:88 ON OFF DAY HOUR	Timer zone: Display system clock and timer status

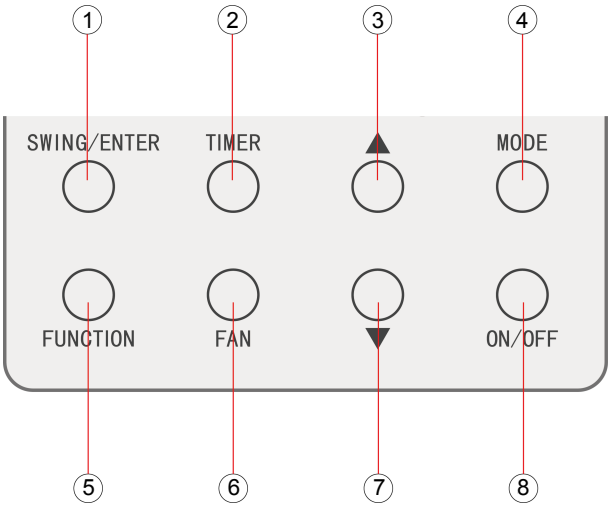

Button graphics

Table Function instruction of buttons

No.	Buttons	Instructions
1	SWING/ENTER	Set vertical air swing Select and cancel functions
2	TIMER	Timer setting
3	▲	Set operating temperature of indoor unit Set Timer Switch Quiet mode, Air grade, Clean grade, set upper and lower temperature limit under Save mode Set and inquiry parameter
7	▼	
4	MODE	Switch Auto, Cooling, Dry, Fan, Heating, Floor Heating, 3D Heating and Space Heating modes for indoor unit. (NOTICE! The Floor Heating, 3D Heating and Space Heating function icon will show up when the unit has those functions)
5	FUNCTION	Switch among Air, Quiet, Light, Health, Absence, Save, Clean, E-heater and X-fan functions
6	FAN	Switch among auto, low speed, low-medium speed, medium speed, medium-high speed, high speed and turbo status
8	ON/OFF	Indoor unit On/Off
3 + 7	▲+▼	Simultaneously press “▲” and “▼” for 5s to enter or cancel the Child Lock function

2.2 Installation and Removal

2.2.1 Installation Dimensions

Unit: mm(inch)

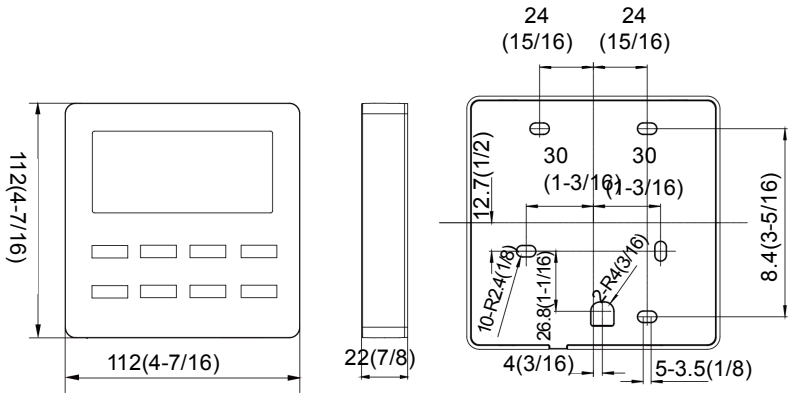

Fig.2.2.1 Installation dimensions for XK46

Unit:mm(inch)

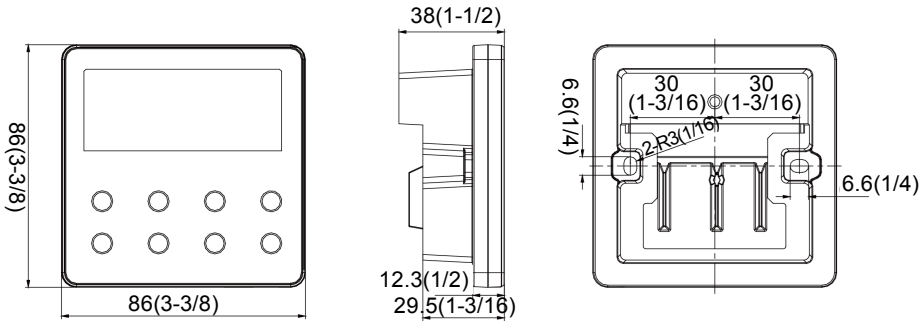

Fig.2.2.2 Dimension of wired controller XK79

2.2.2 Installation Method

(1) Wired Controller XK46 Installation Method:

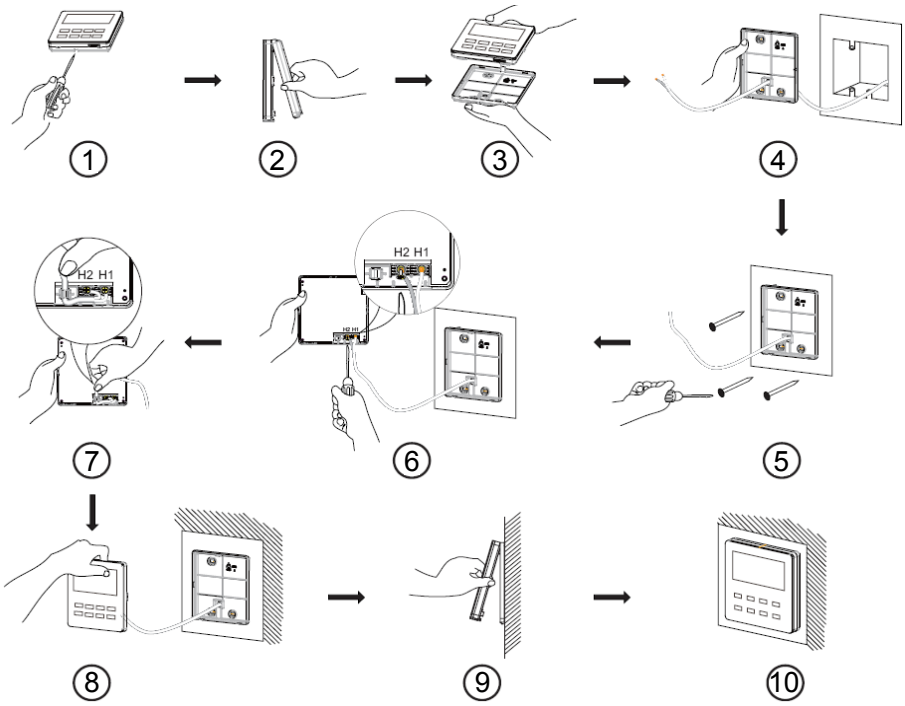

Fig. 2.2.3 Installation diagram for wired controller XK46

Fig. 2.2.3 is the simple installation process of wired controller; please pay attention to the following items:

1) Before installation, please cut off the power for indoor unit.
2) Pull out the two-core twisted pair from the installation hole on wall, and then pull this wire through the "⊓" shape hole at the rear side of Soleplate of wired controller.
3) Stick the bottom plate of wired controller on the wall and then use Self-tapping Screw ST3.9×25 MA to fix Soleplate and installation hole on wall together.
4) Connect two-core twisted pair to H1 and H2 wiring column and then fix the screws.
5) Set two-core into the groove at left side of wiring column, and then bundle panel and Soleplate of wired controller together.

⚠WARNING
If caliber of the communication cord is too large, which causes difficulty in leading or sticking the cord according to above point 2 and point 5, strip some of the sheath of the communication cable to meet the installation requirement.

(2) Wired Controller XK79 Installation Method:

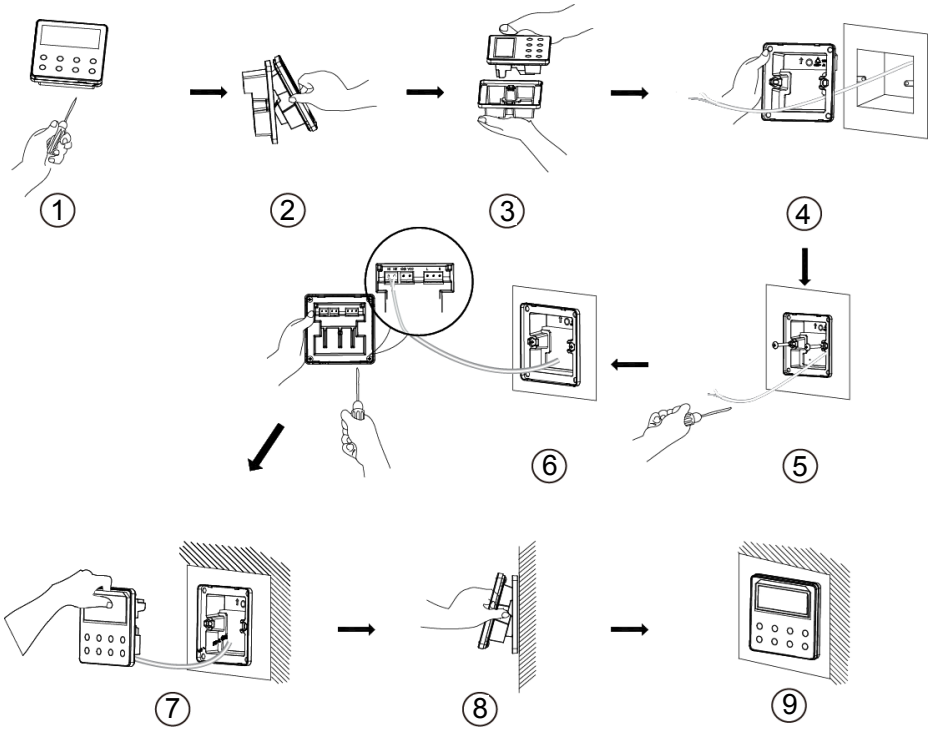

Fig. 2.2.4 Installation diagram for wired controller XK79

Fig.2.2.4 is the simple installation process of wired controller XK79; please pay attention to the following items:

1) Before installation, please cut off the power for indoor unit.
2) Pull out the 2-core twisted pair line connected with the indoor unit from the mounting hole and through the outer shell.
3) Set the wired controller soleplate on the wall and use the M4X25 screws to fix it with the mounting hole.
4) Separately fix the twisted pair on the H1 and H2 terminal by screws.
5) Gate-control wiring notice:
   A. Factory default provided with Gate-control function (factory default the DIP switch S1 to “ON” side).
   B. If the gate-control system is not involved, open the inner shell and turn the No.1 switch of the DIP switch S1 to the number side which is located at the PCB of the inner shell (please power up after finished switch the DIP).
   C. If the gate-control system is connected, make sure the No.1 switch of the DIP switch S1 is turned to the “ON” side. Connect the gate-control terminal to the N and L port or the VCC and GND port. Attention to the following items:
      a) The N and L port is the power supply interface of the 100-240V~50/60Hz gate control.
      b) The VCC and GND port is the power supply interface of the DC 5-24V gate control.
      c) Only one power input can be chosen between the 100-240V~50/60Hz and the DC 5-24V.

6) When connecting to terminals, the wire-stripping length for the conducting wire of twisted pair line should be no more than 6mm and the cores of conduction wire can't be exposed to terminal to preventing short-circuit or electric leakage.

7) After finishing the wiring, buckle the outer shell and the panel together.

2.2.3 Removal Method

(1) Wired Controller XK46 Disassembly diagram:

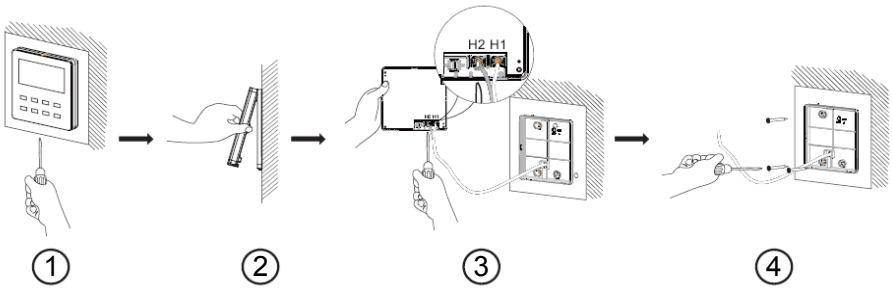

Fig. 2.2.5 Disassembly diagram of wired controller XK46

(2) Wired Controller XK79 Disassembly diagram:

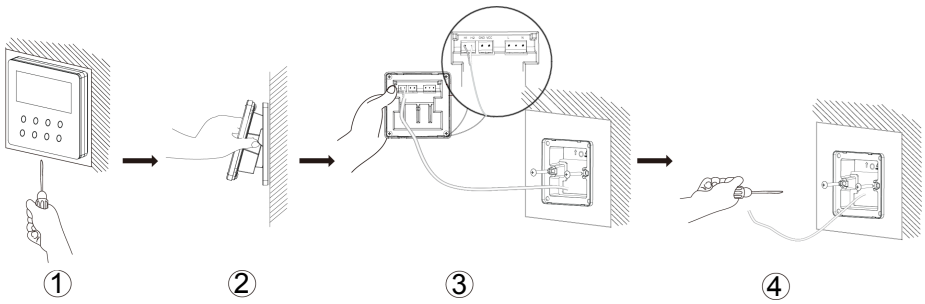

Fig. 2.2.6 Disassembly diagram of wired controller XK79

2.2.4 Connection of Communication Cord

There are 4 ways to connect wired controller with indoor units' network:

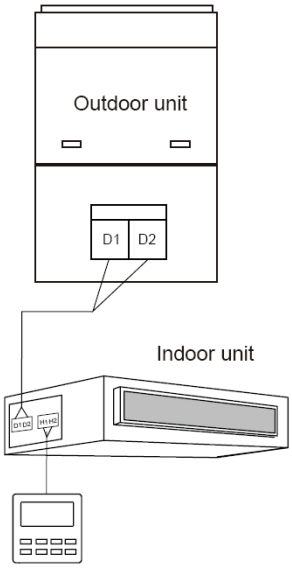

Fig. 2.2.7 One wired controller control one indoor unit

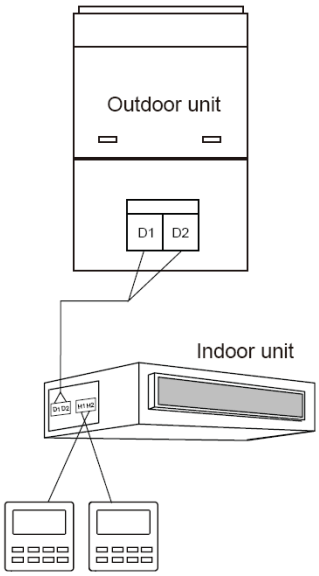

Fig. 2.2.8 Two wired controllers controls one indoor unit

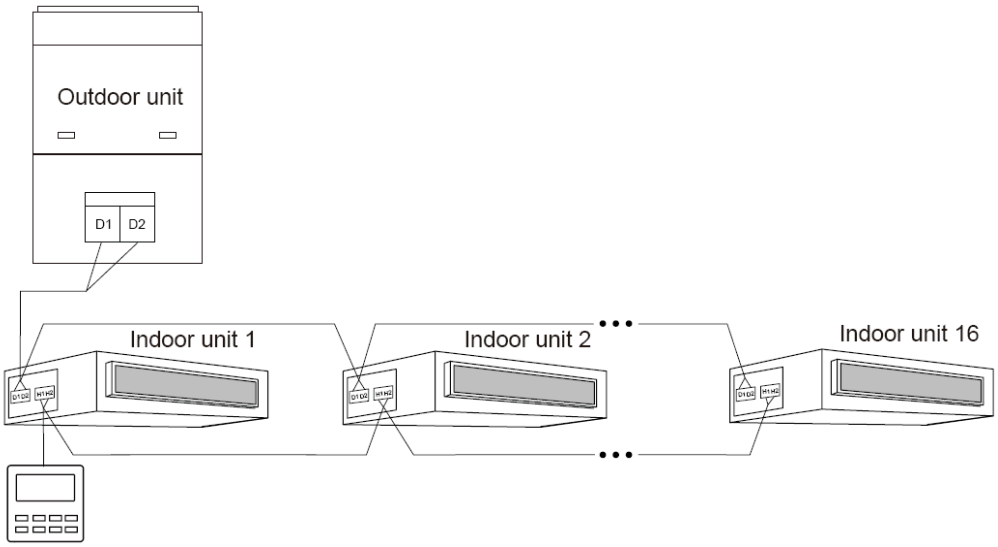

Fig. 2.2.9 One wired controller controls multiple indoor units simultaneously.

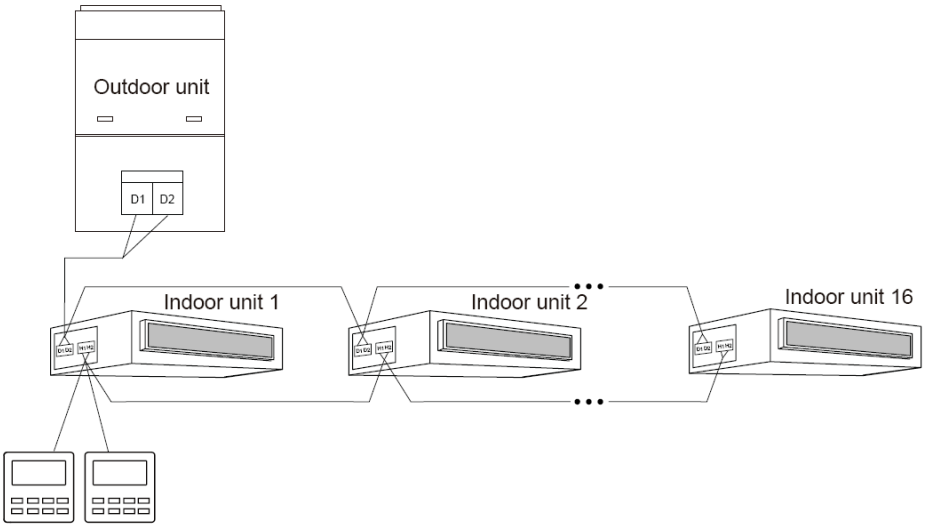

Fig. 2.2.10 Two wired controllers control multiple indoor units simultaneously.

3 Remote Controller

3.1 Remote Controller YAP1F

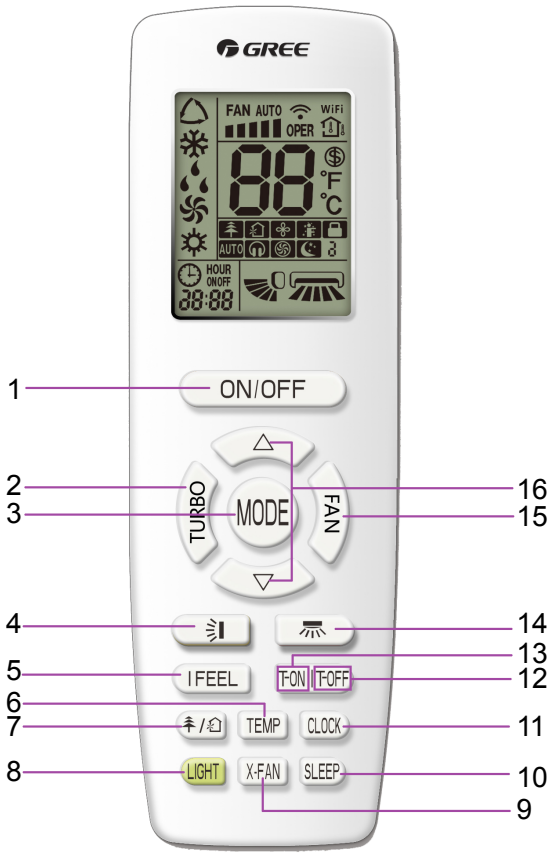

Button name and function introduction

No.	Button name	Function
1	ON/OFF	Turn on or turn off the unit
2	TURBO	Set turbo function
3	MODE	Set operation mode
4		Set up&down swing status
5	I FEEL	Set I FEEL function
6	TEMP	Switch temperature displaying type on the unit's display
7		Set health function and air function
8	LIGHT	Set light function
9	X-FAN	Set X-FAN function
10	SLEEP	Set sleep function
11	CLOCK	Set clock of the system
12	TOFF	Set timer off function
13	TON	Set timer on function
14		Set left&right swing status
15	FAN	Set fan speed
16	△/▽	Set temperature and time

3.2 Remote Controller YV1L1

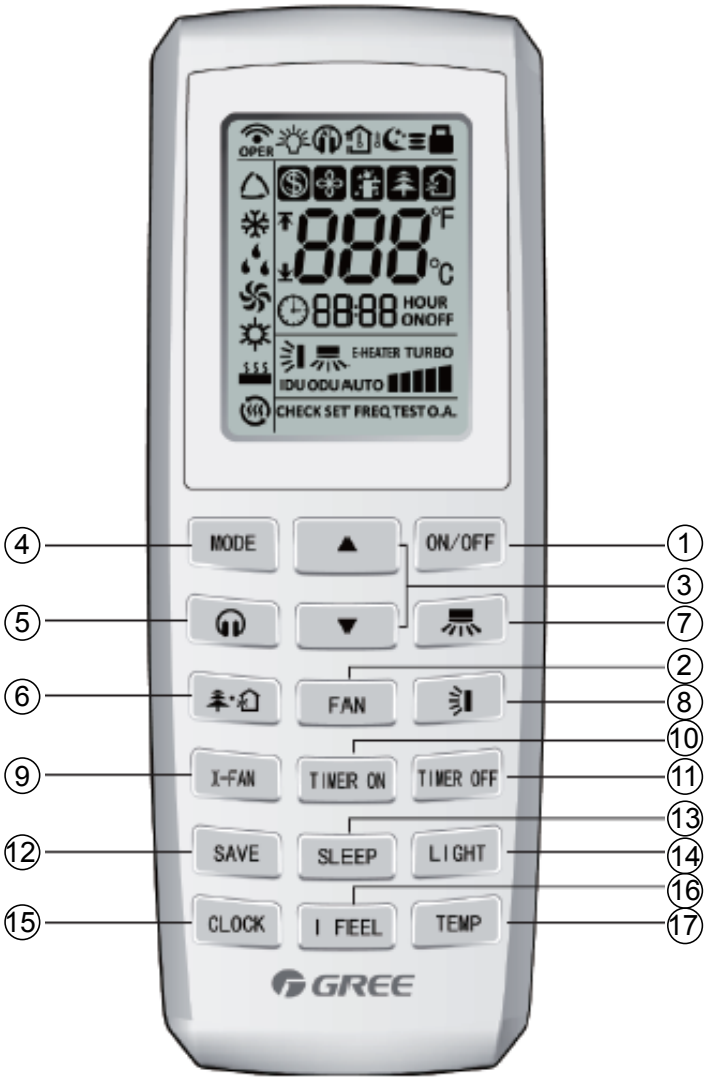

No.	Button name	Function
1	ON/OFF	Turn on or turn off the unit
2	FAN	Set fan speed
3	▲/▼	Set temperature and time
4	MODE	Set operation mode
5		Set quiet function
6		Set health function and air function
7		Set left&right swing status
8		Set up&down swing status
9	X-FAN	Set X-FAN function
10	TIMER ON	Set timer on function
11	TIMER OFF	Set timer off function
12	SAVE	Set energy-saving function
13	SLEEP	Set sleep function
14	LIGHT	Set light function
15	CLOCK	Set clock of the system
16	I FEEL	Set I FEEL function
17	TEMP	Switch temperature displaying type on the unit’s display

4 Introduction to Unit Functions

Function Application of IDUs

Indoor unit functions cover user operation functions and engineering application functions. For user operation functions, refer to operating instructions of the IDU, wired controller, and remote controller.

Engineering application functions include:

SN	Function Name
1	Master IDU query and settings
2	Indoor unit project number query and settings
3	User parameter query
4	User parameter settings
5	Engineering parameter query
6	Engineering parameter settings

Engineering application functions can be operated through the IDU wired controller (XK46 /XK49or XK79) or remote controller (YV1L1, fittings selectable).

4.1 Engineering Application Functions Operated through the XK46 Wired Controller

4.1.1 Master IDU Settings

The master IDU can be set through the wired controller or remote controller. The methods for setting the master IDU through the wired controller are as follows:

Method 1:

Step 1: Set an IDU to power-off status.

Step 2: Press and hold the "MODE" button on the wired controller for more than five seconds.

Step 3: Check whether the setting is successful. If it is, "MASTER" on the wired controller will be on. Otherwise, repeat steps 1 and 2.

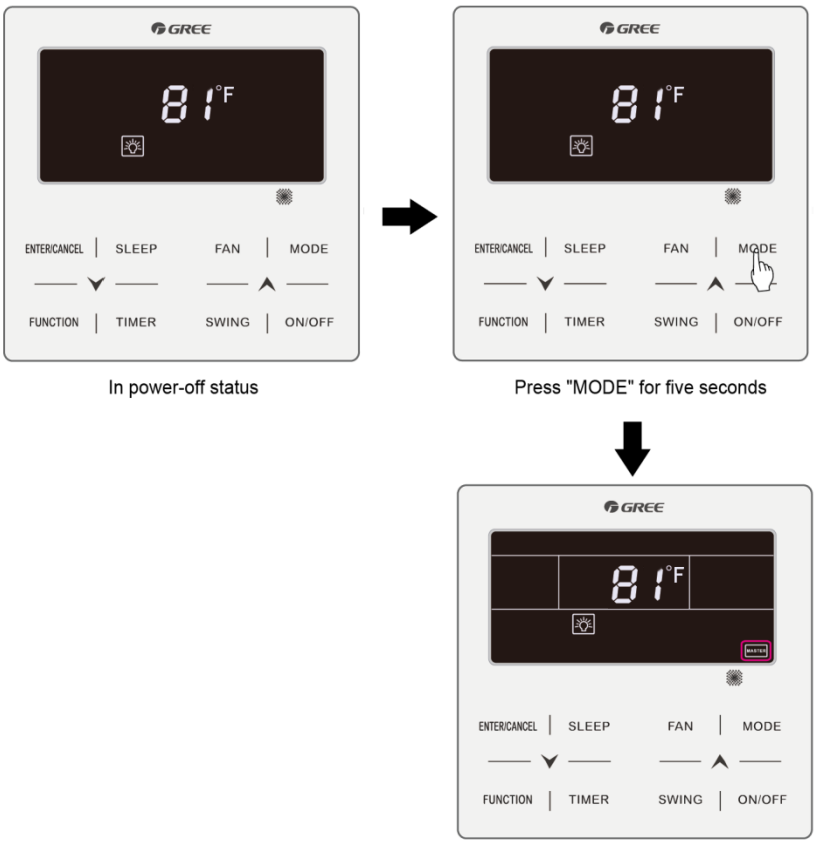

In power-off status

Press "MODE" for five seconds

"MASTER" is on when the master indoor unit is successfully set.

Method 2:

Step 1: Press and hold the “FUNCTION” button for five seconds in power-on or power-off status to enter the parameter query interface.

Step 2: Press and hold the “FUNCTION” button for five seconds in "C00" status to enter the parameter setting interface.

Step 3: Press “▲” or “▼” to switch level 2 parameter codes till “P10” is displayed on the temperature area.

Step 4: Press the “MODE” button to set the parameter to "01" and then Press the “ENTER” button. If the setting is successful, "MASTER" on the wired controller will be on.

4.1.2 Master IDU Display

For IDUs connected with wired controllers, "MASTER" on the wired controller connected with the master IDU will be on.

For IDUs embedded or connected with LED panels, the operation LED on the LED panel of the master IDU will blink three times.

NOTICE! After the master IDU is successfully set, stick the “MASTER” flag to the wired controller or unit panel for convenience of user operation and engineering maintenance. This flag is placed in the package bag of the ODU.

4.1.3 Project Number Query and Settings

(1) Project number query of a single IDU.

Press and hold the “FUNCTION” button for five seconds in power-on or power-off status to enter the parameter query interface "C00". The timer area of the wired controller displays the project number of the current IDU. Synchronously, the double-eight digital LED of the IDU embedded or connected with an LED panel displays its own project number. If the current wired controller works in one-to-many mode, the timer area displays the IDU that has the minimum project number.

(2) Project number of multiple IDUs.

1) Project number query of IDUs in one-to-many mode: Press and hold the “FUNCTION” button for five seconds in power-on or power-off status to enter the parameter query interface "C00". Press “▽” to switch to “C01”. Press the “MODE” button to enter query. The timer area displays the project numbers of IDUs from small to large. Press “△” or “▽” to switch project numbers. Synchronously, the double-eight digital LED of the IDU embedded or connected with an LED panel displays its own project number.

NOTICE! It is normal if the buzzer of the IDU operated by the wired controller rings. The purpose of ringing the buzzer is to facilitate engineering commissioning personnel to locate the IDU, especially for the IDU without any LED panel because it cannot display its project number.

2) Project number query of IDUs in the entire communication network: Press and hold the “FUNCTION” button for five seconds in power-on or power-off status to enter the parameter query interface "C00". Press “▽” to switch to “C18”. Press the “MODE” button to enter query. The timer area of each wired controller in the entire network displays the project number of the corresponding IDU. Synchronously, the double-eight digital LED of each IDU embedded or connected with an LED panel displays its own project number.

Method for quitting query:

Quit the “C18” query interface.

Press the “ON/OFF” button on any wired controller in the network.

(3) Project number settings of IDU.

Press and hold the “FUNCTION” button for five seconds in power-on or power-off status to enter the parameter query interface “C00”. Continuously press the “MODE” button for three times, and then press and hold the “FUNCTION” button for five seconds to enter the engineering parameter setting interface. The temperature area displays “P00”. Press "▽" to switch to “P42”.

Single IDU: Press the “MODE” button. The project number blinks in the timer area. Press “△” or “▽” to adjust the project number, and then Press the “ENTER” button to confirm and return to the upper-level menu.

One-to-many: Press the “MODE” button to enter the IDU selection menu. Press “△” or “▽” to switch IDUs. Press the “MODE” button to set the project number of the current IDU in the same method as above.

4.1.4 User Parameter Query

User parameters can be queried in power-on or power-off status.

(1) Press and hold the “FUNCTION” button for five seconds to enter the user parameter query interface. The temperature area displays “C00” and “View” is on.

(2) Select a parameter code by pressing “⮝” or “⮟”.

(3) Press the “ENTER/CANCEL” button to return to the upper-level menu till quitting parameter query.

The user parameter query list is as follows:

Table 4.1 User Parameter Query List

Parameter Code	Parameter Name	Parameter Range	View Method
C00	Parameter setting ingress	-	**Display mode:** Timer area: displays the project number of the current IDU. NOTICE! If the current HBS network consists of multiple IDUs, only the IDU that has the minimum project number is displayed.
C01	Project number query of IDU and faulty IDU location	1-255: project number of online IDU	**Operation method:** In “C01” status, press the “MODE” button to enter project number query of IDU. Press “▲” or “▼” to switch the IDU SN. **Display mode:** Temperature area: displays the fault of the current IDU (in the case of multiple faults, they are circularly displayed every three seconds). Timer area: displays (project number conflict C5 fault)/project number of the current IDU (project numbers are arranged from small to large). **Special operations:** After users press the “MODE” button to enter project number query, the buzzer of the IDU operated by the wired controller will ring till users quit "C01" query or switch to the next IDU.
C03	Indoor unit quantity query in the system network	1-80	**Timer area:** displays the number of IDUs in the system network.
C06	Preferential operation query	00: common operation 01: preferential operation	**Operation method:** In “C06” status, press the “MODE” button to enter the preferential operation query interface. Press “⮝” or “⮟” to switch the IDU SN. **Display mode:** Temperature area: displays the project number of the current IDU. Timer area: displays the preferential operation setting value of the current IDU.
C07	Indoor environment temperature query	-	**Operation method:** In “C07” status, press the “MODE” button to enter the indoor environment temperature query interface. Press "⮝" or "⮟" to switch the IDU SN. **Display mode:** Temperature area: displays the project number of the current IDU. Timer area: displays the temperature value of the indoor environment temperature sensor after replenishment.
C08	Prompt time query for air filter cleaning	4-416: days	Timer area: displays the prompt time for air filter cleaning.
C09	Wired controller adress query	01, 02	Timer area: displays the address of the current wired controller.

Parameter Code	Parameter Name	Parameter Range	View Method
C11	Indoor unit quantity query in one-to-many mode	1-16	Timer area: displays the number of IDUs controlled by the wired controller.
C12	Outdoor environment temperature query	-	Timer area: displays the temperature value of the environment temperature sensor of the master ODU.
C17	Indoor relative humidity query	20-90	**Operation method:** In “C17” status, press the “MODE” button to enter the indoor relative humidity query interface. Press “▲” or “▼” to switch the IDU SN. Display mode: Temperature area: displays the project number of IDU (project numbers are arranged from small to large). Timer area: displays the relative humidity value. If the HBS network consists of only one IDU, the timer area directly displays the IDU relative humidity value in the “C17” interface.
C18	Indoor unit project number query in the communication network	1-255	**Operation method:** In “C18” status, press the “MODE” button to enter the IDU project number query interface. Press “▲” or “▼” to switch the IDU SN. Cancellation method: If users quit the "C18" query interface within 20 seconds, the project number display is cancelled. If the query interface is quit after 20 seconds upon timeout, press the “ON/OFF” button in power-on or power-off status to cancel the project number display. The method for cancelling the project number display on any wired controller in the network is the same as ②. **Display mode:** Temperature area: displays the SN of the current IDU (project numbers are arranged from small to large). Timer area: displays the project number of the current IDU. Each IDU/wired controller in the network displays its own project number (the wired controller circularly displays project numbers of IDUs every three seconds from small to large).
C20	Fresh-air IDU outlet temperature query	-9 to 99	**Operation method:** In “C20” status, press the “MODE” button to enter the fresh-air IDU temperature query interface. Press “▲” or “▼” to switch the IDU SN. **Display mode:** Temperature area: displays the project number of the current IDU (1-16, project numbers are arranged from small to large). Timer area: displays the fresh-air IDU outlet temperature. If the HBS network consists of only one IDU, the timer area directly displays the fresh-air IDU outlet temperature in the "C20" interface.
C23	Inquiry of the version of wired controller	-	**Display mode:** Display in timer zone: version of the wired controller (display on the right) Note: Version of the wired controller refers to the version of the program of the wired controller The version number doesn’t have decimal points. It’s an integral number.

NOTICE! In parameter query status, "FAN", “TIMER”, "SLEEP", and "SWING" are invalid. By pressing the “ON/OFF” button, users can return to the main interface but not power on/off the unit.

In parameter query status, signals of the remote controller are invalid.

4.1.5 User Parameter Settings

User parameters can be set in power-on or power-off status.

(1) Press and hold the “FUNCTION” button for five seconds. The temperature area displays “C00”. Press and hold the “FUNCTION” button for another five seconds to enter the wired controller parameter setting interface. The temperature area displays “P00”.

(2) Select a parameter code by pressing “⮝” or “⮟”. Press the “MODE” button to switch to parameter value settings. The parameter value blinks. Adjust the parameter value by pressing “⮝” or “⮟” and then press the “ENTER/CANCEL” button to complete settings.

(3) Press the “ENTER/CANCEL” button to return to the upper-level menu till quitting parameter settings.

The user parameter setting list is as follows:

Table 4.2 User Parameter Setting List

Parameter Code	Parameter Name	Parameter Range	Default Value	Remark
P10	Master IDU settings	00: Not change the master/slave status of the current IDU 01: set the current IDU to master IDU	00	After the IDU connected with the current wired controller is successfully set to master IDU, “MASTER” on the wired controller is on.
P11	Infrared connection settings of wired controller	00: disabled 01: enabled	01	This setting can only be enabled through the master wired controller. When the infrared remote receiving function of the wired controller is disabled, neither the master nor slave wired controller can receive remote signals. The wired controllers can only be operated by pressing.
P13	Wired controller address settings	01: master wired controller 02: slave wired controller	01	When two wired controllers simultaneously control one or more IDUs, the two wired controllers should use different addresses. The slave wired controller (address: 02) does not have the unit parameter setting function except its own address settings.
P14	Group-controlled IDU quantity settings	00: disabled 01-16: number of indoor units	01	This value is set based on the number of connected IDUs. If the current value is inconsistent with the actual number of group-controlled IDUs, “L9” fault may occur.
P16	Unit setting for display temperature	00：°C 01：°F	00	
P30	Static pressure setting for general indoor unit	Type 1: 03.04.05.06.07 Type 2: 01.02.03.04.05.06.07.08.09	05	01-09 are valid for high ESP duct type unit; only 03-07 are valid for other indoor unit.
P31	Ceiling installation height setting	00: standard-ceiling installation height 01: high-ceiling installation height	00	-
P33	Timer function settings	00: common timer 01: time-point timer	00	-
P34	Repeating validity for time-point timer	00: single timer 01: repeated everyday	01	This setting is valid only when the timer function is set to time-point timer.

Parameter Code	Parameter Name	Parameter Range	Default Value	Remark
P37	Upper temperature limit setting for auto mode	17°C -30°C (63°F～86°F)	25 (77°F)	When temperature unit is ℃: upper temprature limit-lower temperature limit ≥1； When temperature unit is ℉: upper temperature limit-lower temperature limit ≥2；
P38	Lower temperature limit setting for auto mode	16°C -29°C (61°F～84°F)	20 (68°F)	
P43	Preferential operation settings	00: common operation 01: preferential operation	00	When power supply is insufficient, users are allowed to power on/off the IDU set with preferential operation and other IDUs are forcibly powered off. A fault code is displayed on the IDU that is forcibly powered off.
P46	Accumulated time clearing for air filter cleaning	00: not cleared 01: cleared	00	-
P49	Opening angle of indoor unit air-return plate*	01: angle 1(25°) 02: angle 2(30°) 03: angle 3(35°)	01	Only applicable to units with air-return plate.
P50	Air outlet temperature setting of cooling for Fresh Air Unit	16°C~30°C (61~86°F)	18°C (64°F)	Only applicable to Fresh Air Indoor Unit.
P51	Air outlet temperature setting of heating for Fresh Air Indoor Unit	16°C~30°C (61~86°F)	22°C (72°F)	Only applicable to Fresh Air Indoor Unit.
P54	Linkage function setting of Fresh Air Indoor Unit	00: without linkage control 01: with linkage control	00	After linkage function is set, Fresh Air Indoor Unit will be turned on/off following the on/off status of common indoor unit. Besides, Fresh Air Indoor Unit can also be turned on/off manually. NOTICE: Only applicable to Fresh Air Indoor Unit.
P69	Signal type of gate control	01:5-12V DC (including 12V) signal of gate control 02: 12V-24V DC (excluding 12V) signal of gate control 03: 110V AC signal of gate control 04: 220V AC signal of gate control	04	Only applicable to wired controller XK79 with gate control.
P71	Setback function setting	00：invalid 01：valid	00	Only applicable for gate control wired controller.
P72	Upper temperature limit of Setback function	20~30°C (68~86°F)	26°C (79°F)	Only applicable for gate control wired controller.
P73	Lower temperature limit of Setback function	16~26°C (61~79°F)	20°C (68°F)	Only applicable for gate control wired controller.
P74	Gate control status setting	00：OFF 01：Operate at the status before pulling out the status	01	

Parameter Code	Parameter Name	Parameter Range	Default Value	Remark
P78	Cold air prevention time setting for indoor unit	00：180s 01：300s 02：420s 03：600s	00	
P82	Time format setting	00：24h format 01：12h format	00	
P63, P64, P65, P76 and P77 are reserved code. Please do not set it.				

NOTICE! In parameter setting status, "FAN", “TIMER”, "SLEEP", and "SWING" are invalid. By pressing the “ON/OFF” button, users can return to the main interface but not power on/off the unit.

In parameter setting status, signals of the remote controller are invalid.

4.1.6 Engineering Parameter Query

Engineering parameters can be queried in power-on or power-off status.

Press and hold the “FUNCTION” button for five seconds to enter the engineering parameter query interface. The temperature area displays “C00” and “View” is on.

(1) Within five seconds after “C00” is displayed, continuously press the “MODE” button for three times in an interval less than one second to enter engineering parameter query.

(2) Select a parameter code by pressing “⮝” or “⮟”.

(3) Press the “ENTER/CANCEL” button to return to the upper-level menu till quitting parameter query.

In the engineering parameter query interface, users can also query user parameters listed in Table 4.3.

The engineering parameter query list is as follows:

Table 4.3 Engineering Parameter Query List

Parameter Code	Parameter Name	Parameter Range	View Method
C00	Parameter setting ingress (default)	-	**Display mode:** **Timer area:** displays the project number of the current IDU. NOTICE! If the current HBS network consists of multiple IDUs, only the IDU that has the minimum project number is displayed.
C02	Indoor unit capacity query	-	**Operation method:** In “C02” status, press the “MODE” button to enter the preferential operation query interface. Press "⮝" or "⮟" to switch the project number of IDU. **Display mode:** **Temperature area:** displays the project number of the current IDU. **Timer area:** displays the current IDU capacity/IDU capacity after adjustment.
C04	Project number query of master IDU	1-255: project number 00: no master IDU	**Timer area:** displays the project number of the master IDU/00.
C05	Historical fault query ingress of IDU	Five historical faults	**Operation method:** In “C05” status, press the “MODE” button to enter the historical fault query interface. Press "⮝" or "⮟" to switch the project number of IDU. Press the “MODE” button to enter fault code query of the current IDU. Press “⮝” or “⮟” to switch the fault SN. Press the “ENTER/CANCEL” button to return to the upper-level menu. **Display mode:** **Temperature area:** displays the fault SN and fault code. **Timer area:** displays the project number of IDU.

Parameter Code	Parameter Name	Parameter Range	View Method
C10	Static pressure setting query of ODU	00: 0 Pa 20: 20 Pa 50: 50 Pa 82: 82 Pa	**Operation method:** In “C10” status, press the “MODE” button to enter static pressure setting query of ODU. Press "⮝" or "⮟" to switch the ODU address. **Display mode:** **Temperature area:** displays the address of the current ODU. **Timer area:** displays the static pressure setting value.
C13	Outdoor unit network number query	1-255	**Timer area:** displays the network number of the current ODU.
C14	Temperature query for inlet-tube temperature sensor of IDU	-9 to 99	**Operation method:** In “C14” status, press the “MODE” button to enter inlet-tube temperature sensor query of IDU. Press "⮝" or "⮟" to switch the IDU SN. **Display mode:** **Temperature area:** displays the project number of the current IDU. **Timer area:** displays the temperature value. If the HBS network consists of only one IDU, the timer area directly displays the temperature value in the “C14” interface. No matter Fahrenheit or Centigrade remote signals are received, the temperature is displayed in Centigrade. When the wired controller displays the inlet-tube temperature after receiving signals from the remote controller, the inlet-tube temperature of the IDU that has the minimum project number in the HBS network is displayed by default.
C15	Temperature query for outlet-tube temperature sensor of IDU	-9 to 99	**Operation method:** In “C15” status, press the “MODE” button to enter outlet temperature sensor query of IDU. Press "⮝" or "⮟" to switch the IDU SN. **Display mode:** **Temperature area:** displays the project number of the current IDU. **Timer area:** displays the temperature value. If the HBS network consists of only one IDU, the timer area directly displays the temperature value in the "C15" interface. When the wired controller displays the outlet-tube temperature after receiving signals from the remote controller, the inlet-tube temperature of the IDU that has the minimum project number in the HBS network is displayed by default.
C16	Opening degrees query of electronic expansion valve of IDU	0-20	**Operation method:** In “C16” status, press the “MODE” button to enter electronic expansion valve opening degree query of IDU. Press "⮝" or "⮟" to switch the IDU SN. **Display mode:** **Temperature area:** displays the project number of the current IDU. **Timer area:** displays the opening degree value. If the HBS network consists of only one IDU, the timer area directly displays the opening degree value of electronic expansion valve in the “C16” interface. When the wired controller displays the opening degree of electronic expansion valve after receiving signals from the remote controller, the opening degree of electronic expansion valve of the IDU that has the minimum project number in the HBS network is displayed by default.
n2	Capacity configuration ratio upper-limit of outdoor/IDU	35: 135% 50: 150%	**Temperature area:** displays the parameter code. **Timer area:** displays the setting value of capacity configuration ratio of the current outdoor/IDU.

<table>
<tr><th>Parameter Code</th><th>Parameter Name</th><th>Parameter Range</th><th>View Method</th></tr>
<tr><td>n6</td><td>Historical fault query ingress of ODU</td><td>Five historical faults</td><td>Operation method:
In “n6” status, press the “MODE” button to enter fault code query of ODU (when a wired controller controls multiple IDUs, only the faults memorized by the IDU that has the minimum project number can be queried). Press “⮝” or “⮟” to switch the fault SN. Press the “ENTER/CANCEL” button to return to the upper-level menu.
Display mode:
Temperature area: displays the fault SN and fault code from left to right (1-5, faults are arranged from the earliest to the latest).
Timer area: displays the project number of the ODU.</td></tr>
<tr><td>n7</td><td>Parameter query ingress of ODU</td><td>01-13
25-29</td><td>Operation method (n7 query is not supported for the slave wired controller):
In “n7” status, the timer area is not displayed. Press the “MODE” button to enter parameter query of ODU. The first bit in the temperature area (display bit of the ODU module ID) blinks. Press “▲” or “▼” to switch the ODU module ID. Press the “MODE” button to select an ODU module. In this case, the first bit in the temperature area stops blinking, and the second and third bits in the temperature area display the parameter code. The timer area displays a corresponding parameter value. Press “▲” or “▼” to switch the parameter code and press the “ENTER/CANCEL” button to return to the upper-level menu.
Display mode:
Temperature area: displays the ODU module ID and parameter code from left to right.
Timer area: displays a corresponding parameter value to the right.
<table>
<tr><th>Parameter Code</th><th>Parameter Name</th><th>Unit</th></tr>
<tr><td>01</td><td>Outdoor environment temperature</td><td>°C/°F</td></tr>
<tr><td>02</td><td>Operation frequency of compressor 1</td><td>Hz</td></tr>
<tr><td>03</td><td>Operation frequency of compressor 2</td><td>Hz</td></tr>
<tr><td>04</td><td>Operation frequency of outdoor fan</td><td>Hz</td></tr>
<tr><td>05</td><td>Module high-pressure</td><td>°C/°F</td></tr>
<tr><td>06</td><td>Module low-pressure</td><td>°C/°F</td></tr>
<tr><td>07</td><td>Discharge temperature of compressor 1</td><td>°C/°F</td></tr>
<tr><td>08</td><td>Discharge temperature of compressor 2</td><td>°C/°F</td></tr>
<tr><td>09</td><td>Discharge temperature of compressor 3</td><td>°C/°F</td></tr>
<tr><td>10</td><td>Discharge temperature of compressor 4</td><td>°C/°F</td></tr>
<tr><td>11</td><td>Discharge temperature of compressor 5</td><td>°C/°F</td></tr>
<tr><td>12</td><td>Discharge temperature of compressor 6</td><td>°C/°F</td></tr>
<tr><td>13</td><td>Operation frequency of compressor 3</td><td>Hz</td></tr>
<tr><td>25</td><td>Outdoor unit heating EXV1
(Actual value = Displayed value * 10)</td><td>PLS</td></tr>
<tr><td>26</td><td>Outdoor unit heating EXV2
(Actual value = Displayed value * 10)</td><td>PLS</td></tr>
<tr><td>27</td><td>Subcooler EXV
(Actual value = Displayed value * 10)</td><td>PLS</td></tr>
<tr><td>28</td><td>Defrosting temperature</td><td>°C/°F</td></tr>
<tr><td>29</td><td>Liquid-extracting temperature of subcooler</td><td>°C/°F</td></tr>
<tr><td>30</td><td>Outlet temperature of accumulator</td><td>°C/°F</td></tr>
<tr><td>31</td><td>Oil return temperature</td><td>°C/°F</td></tr>
<tr><td>32</td><td>Inlet-tube temperature of condenser</td><td>°C/°F</td></tr>
<tr><td>33</td><td>Outlet temperature of condenser</td><td>°C/°F</td></tr>
</table></td></tr>
</table>

<table>
<tr><th>Parameter Code</th><th>Parameter Name</th><th>Parameter Range</th><th>View Method</th></tr>
<tr><td>A6</td><td>Unit cooling/heating function</td><td>nA: cooling/heating
nC: single-cooling
nH: single-heating
nF: air supply</td><td>Temperature area: displays the function code.
Timer area: displays the cooling/heating function setting value of the current unit.</td></tr>
<tr><td>nb</td><td>Bar code query of IDU</td><td>0-9, A-Z, a-z, -</td><td>
Operation method (nb query is not supported for the slave wired controller):
In “nb” status, the timer area is not displayed. Press the “MODE” button to enter bar code query. The temperature area displays “nb” and the project number in the timer area blinks. Press “▲” or “▼” to switch the project number of IDU.
Press the “MODE” button to select an IDU. The temperature area displays “Un” and the timer area displays “-n”. Press “▲” or “▼” to display the entire-unit bar code and controller bar code of IDU. Press the “ENTER/CANCEL” button to return to the upper-level menu. The temperature area displays “nb” and the timer area displays the project number of the queried IDU. Press the “ENTER/CANCEL” button again to return to the upper-level menu.
Display mode:
Temperature area: displays nb/Un/Pc/bar code.
Timer area: displays -n/project number/bar code.
The following is an example:
<table>
<tr><th>Example</th><th>Temperature Area</th><th>Timer Area</th><th>Remark 1</th><th>Remark 2</th></tr>
<tr><td rowspan="3">Entire-unit bar code of IDU N1r0128150066</td><td>Un (to the right)</td><td>-n (in the middle)</td><td>It indicates that the following is the entire-unit bar code of IDU.</td><td rowspan="6">Press “▼” to display downward and press “▲” to display upward.</td></tr>
<tr><td>N1r</td><td>0128</td><td>It indicates the former seven bits of the bar code.</td></tr>
<tr><td>150</td><td>066</td><td>It indicates the latter six bits of the bar code.</td></tr>
<tr><td rowspan="3">Controller bar code of IDU N1r0128150067</td><td>Pc</td><td>-n</td><td>It indicates that the following is the controller bar code of IDU.</td></tr>
<tr><td>N1r</td><td>0128</td><td>It indicates the former seven bits of the bar code.</td></tr>
<tr><td>150</td><td>067</td><td>It indicates the latter six bits of the bar code.</td></tr>
</table>
NOTICE!
Un indicates the entire-unit bar code of IDU and Pc indicates the controller bar code of IDU.
When there is only one IDU, press the “MODE” button in “nb” status to enter bar code query without selecting the project number of IDU.
The system quits the query status if no operations are performed in 60 seconds.
The bar code query starts from the entire-unit bar code of IDU and ends at the controller bar code of IDU without circulation. That is, the query does not start again even if users press “▼”.
</td></tr>
</table>

NOTICE! In parameter query status, "FAN", “TIMER”, "SLEEP", and "SWING" are invalid. By pressing the “ON/OFF” button, users can return to the main interface but not power on/off the unit.

In parameter query status, signals of the remote controller are invalid.

4.1.7 Engineering Parameter Settings

Engineering parameters can be set in power-on or power-off status.

(1) Press and hold the “FUNCTION” button for five seconds. The temperature area displays “C00”. Continuously press the “MODE” button for three times, and then press and hold the “FUNCTION” button for five seconds to enter the engineering parameter setting interface. The temperature area displays “P00”.

(2) Select a parameter code by pressing “⮝” or “⮟”. Press the “MODE” button to switch to parameter value settings. The parameter value blinks. Adjust the parameter value by pressing “⮝” or “⮟” and then press the “ENTER/CANCEL” button to complete settings.

(3) Press the “ENTER/CANCEL” button to return to the upper-level menu till quitting parameter settings.

In the engineering parameter setting interface, users can also set user parameters listed in Table 4.4.

The engineering parameter setting list is as follows:

Table 4.4 Engineering Parameter Setting List

Parameter Code	Parameter Name	Parameter Range	Default Value	Remark
P15	Power-down memory mode	00: standby after power-down recovery 01: restoring the original status after power-down recovery	00	-
P17	Historical fault clearing for IDU	00: not cleared 01: cleared	00	Historical faults of all IDUs controlled by the current wired controller are cleared.
P20	Environment temperature sensor settings for IDU	01: temperature sensor of air return vent 02: temperature sensor of wired controller 03: temperature sensor of air return vent for cooling, dehumidifying, and air supply; temperature sensor of wired controller for heating 04: temperature sensor of wired controller for cooling, dehumidifying, and air supply; temperature sensor of air return vent for heating	03	When there are master and slave wired controllers and the temperature sensor of wired controller is used, only the temperature sensor of the master wired controller is used by default. Note: ① In automatic mode, the environment temperature sensor settings are invalid for a common IDU but the setting value is memorized. ② The environment temperature sensor settings are invalid for a fresh-air IDU. The temperature sensor of air return vent is used by default.

Parameter Code	Parameter Name	Parameter Range	Default Value	Remark
P21	Corrected value of environment temperature sensor of IDU (for cooling, dehumidifying, and air supply)	-15 to +15	Temperature sensor of unit: 0°C; temperature sensor of wired controller: 0°C	Press "⮝" or "⮟" to add or reduce by 1°C.
P22	Corrected value of environment temperature sensor of IDU (for heating, fast heating, and air warming)	-15 to +15	Temperature sensor of unit: -2°C; temperature sensor of wired controller: 0°C	Press "⮝" or "⮟" to add or reduce by 1°C. The temperature sensor of unit and the temperature sensor of wired controller share the same corrected value. In heating mode, corrected value of temperature sensor of unit = corrected value of temperature sensor of wired controller - 2°C.
P32	Capacity adjustment function of IDU	-40% to +40%	00	Press "⮝" or "⮟" to add or reduce by 10%.
P35	Factory setting recovery for user functions	00: invalid 01: valid	00	Select "01" and then press and hold the "ENTER/CANCEL" button to restore the factory settings for user functions (factory setting recovery fails if remote shielding is valid).
P36	Factory setting recovery for engineering settings	00: invalid 01: valid	00	Select "01" and then press and hold the "ENTER/CANCEL" button to restore the factory status for engineering settings (factory setting recovery fails if remote shielding is valid).
P40	Prevention for heat collection	00: disabled 10: 10s 20: 20s 30: 30s 40: 40s 50: 50s 60: 60s	00	It indicates the number of seconds for enabling the low-level fan every 15min.
P41	Longest defrosting time setting for outdoor unit	10/15/20：10/15/20min	15	
P42	Project number settings of IDU	1-255	Automatically generated upon the initial system operation	In "P42" status, press the "MODE" button to enter the setting menu. The project number blinks in the timer area. Press "⮝" or "⮟" to adjust the project number. Press the "ENTER/CANCEL" button to confirm settings and return to the upper-level menu.
P45	One-key project number reset for IDU	00: invalid 01: valid	00	When it is set to "01", the wired controller initiates an IDU project number reset command.
P48	Minimum opening degree setting for heating breakdown of IDU expansion valves	00: automatically controlled 1-500	-	After the default minimum opening degree for heating breakdown is manually modified, the opening degree remains unchanged upon heating breakdown.

Parameter Code	Parameter Name	Parameter Range	Default Value	Remark
P53	AHU-KIT linkage function setting	00：invalid 01：valid	00	When setting “01”, multiple AHU-KIT can operate simultaneously.
P55	Static pressure settings for DC Fresh Air Indoor Unit	Setting range: 01、02、03、04、05、06、07、08、09、10、11、12、13	08	Only applicable to DC Fresh Air Indoor Unit.
P56	Fan status setting under heating mode	00：OFF； 01：fan speed setting；	00	It’s the fan status when heating to the temperature point. When setting “01”, the fan operates according to the set fan speed. Only applicable for AHU-KIT indoor unit.
P60	AHU-KIT working method setting	00：air-return type 01：fresh air type		Only applicable for AHU-KIT indoor unit.
P66	Flag bit for unit of dual heat source	01: cancel the setting of dual heat source for the indoor unit 02: set the indoor unit as dual heat source 03: cancel the setting of dual heat source for all units 04: set all units as dual heat source	01	-
P75	Fan speed setting when heating thermostat is OFF	00：LL speed 01：OFF	00	Only valid for the cassette type unit
P80	Display temperature setting	00：display setting temperature 01：display ambient temperature	00	
P81	Functional setting of lifting panel	00: invalid 01: valid	00	Only valid for the 360° air discharge cassette type.
n0	System conservation operation settings	00: comfortability preferred 01: conservation preferred	00	-
n1	Defrosting period settings	40: 40min 50: 50min 60: 60min	50	-
n3	Forcible defrosting	00: common 01: forcible defrosting	-	After settings, it automatically restores to “00”.
n4	Highest capacity output limitation settings for ODU	08: 80% 09: 90% 10: 100%	10	Enter query in “n4” status. The temperature area displays the function code and the timer area displays the corresponding function setting value.
A7	Silent function of ODU	00: no silent function 01-09: intelligent nighttime silent mode 10-12: forcible silent mode	00	Enter query in “A7” status. The temperature area displays the function code and the timer area displays the corresponding function setting value.
P47, P52-53, P57-59, P61-62, P67-68, P70, P79, qb, 4d, 4L are reserved code. Please do not set it.				

NOTICE! In parameter setting status, "FAN", “TIMER”, "SLEEP", and "SWING" are invalid. By pressing the “ON/OFF” button, users can return to the main interface but not power on/off the unit.

In parameter setting status, signals of the remote controller are invalid.

4.1.8 Failure Display

When a fault occurs during the system operation, the temperature area of wired controller displays the fault code. When multiple faults occur, fault codes are circularly displayed.

When a fault occurs, power off the unit and ask for professional maintenance personnel for help.

The following figure shows the power-on high-pressure protection fault interface.

Power-on High-pressure Protection Fault Interface

NOTICE! If the IDU connected with the current wired controller is a fresh-air IDU, “FAP” is displayed on the main interface of the wired controller. Only the outlet temperature can be set for the fresh-air IDU. For the setting method, see the "IDU Function Settings" section.

4.2 Engineering Application Functions Operated through the XK49 Wired Controller

XK49 Wired Controller

4.2.1 Master IDU Settings

Method 1: In power-off status, press and hold the “MODE” button for five seconds to set the IDU connected with the current wired controller to master IDU. If the setting is successful, “MASTER” will be on.

Method 2:

Step 1: In power-on or power-off status, press and hold the “MODE” button and "SWING" simultaneously for five seconds to enter the parameter query interface.

Step 2: In "C00" status, press and hold the “MODE” button and "SWING" simultaneously for five seconds to enter the parameter setting interface.

Step 3: Press "▲" or "▼" to switch level 2 parameter codes till “P10” is displayed on the temperature area.

Step 4: Press the “MODE” button to set the parameter to "01" and then Press the “ENTER” button. If the setting is successful, "MASTER" on the wired controller will be on.

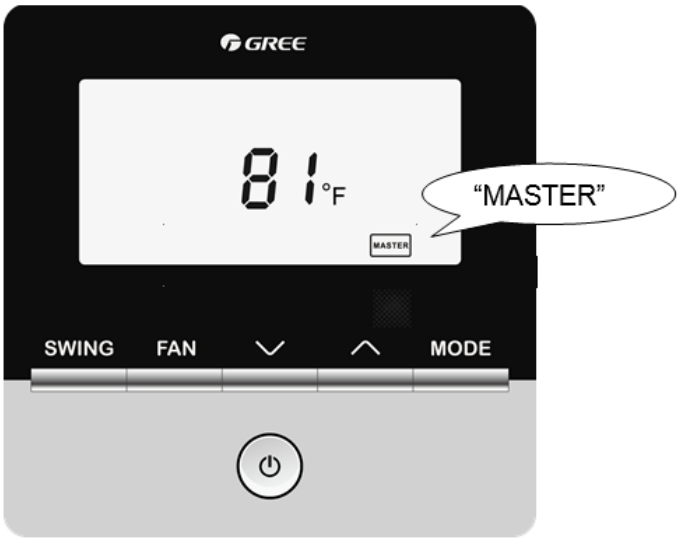

4.2.2 User Parameter Query

User parameters can be queried in power-on or power-off status.

(1) Press and hold the “MODE” button and "SWING" simultaneously for five seconds to enter the user parameter query interface. The temperature area displays “C00” and “View” is on.

(2) Select a parameter code by pressing “∨” or “∧”.

(3) Press the “SWING” button to return to the upper-level menu till quitting parameter query.

For the user parameter query list of the XK49 wired controller, refer to the user parameter query list in XK46 user parameter query.

NOTICE! In parameter query, the function of "SWING" on the XK49 wired controller is equivalent to the function of “ENTER/CANCEL” on the XK46 wired controller.

4.2.3 User Parameter Settings

User parameters can be set in power-on or power-off status.

(1) Press and hold the “MODE” button and "SWING" simultaneously for five seconds. The temperature area displays “C00”. Press and hold the “MODE” button and "SWING" simultaneously for another five seconds to enter the wired controller user parameter setting interface. The temperature area displays “P00”.

(2) Select a parameter code by pressing “∨” or “∧”. Press the “MODE” button to switch to parameter value settings. The parameter value blinks. Adjust the parameter value by pressing “∨” or “∧” and then press the “SWING” button to complete settings.

(3) Press the “SWING” button to return to the upper-level menu till quitting parameter settings.

For the user parameter setting list of the XK49 wired controller, refer to the user setting query list in XK46 user parameter settings.

NOTICE! In parameter settings, the function of "SWING" on the XK49 wired controller is equivalent to the function of “ENTER/CANCEL” on the XK46 wired controller.

4.2.4 Engineering Parameter Query

Engineering parameters can be queried in power-on or power-off status.

(1) Press and hold the “MODE” and "SWING" button simultaneously for five seconds to enter the engineering parameter query interface. The temperature area displays “C00” and “VIEW” is on.

(2) In "C00" status, continuously press the “MODE” button for three times to enter engineering parameter query.

(3) Select a parameter code by pressing “∨” or “∧”.

(4) Press the “SWING” button to return to the upper-level menu till quitting parameter query.

For the engineering parameter query list of the XK49 wired controller, refer to the engineering parameter query list in XK46 engineering parameter query.

NOTICE! In parameter query, the function of "SWING" on the XK49 wired controller is equivalent to the function of “ENTER/CANCEL” on the XK46 wired controller.

4.2.5 Engineering Parameter Settings

Engineering parameters can be set in power-on or power-off status.

(1) Press and hold the “MODE” and "SWING" button simultaneously for five seconds. The temperature area displays “C00”. Continuously press the “MODE” button for three times, and then press and hold the “MODE” button and "SWING" simultaneously for another five seconds to enter the wired controller engineering parameter setting interface. The temperature area displays “P00”.

(2) Select a parameter code by pressing “∨” or “∧”. Press the “MODE” button to switch to parameter value settings. The parameter value blinks. Adjust the parameter value by pressing “∨” or “∧” and then press the “SWING” button to complete settings.

(3) Press the “SWING” button to return to the upper-level menu till quitting parameter settings.

For the engineering parameter setting list of the XK49 wired controller, refer to the engineering setting query list in XK46 engineering parameter settings.

NOTICE! In parameter settings, the function of "SWING" on the XK49 wired controller is equivalent to the function of “ENTER/CANCEL” on the XK46 wired controller.

4.3 Engineering Application Functions Operated through the XK79 Wired Controller

4.3.1 Master IDU Settings

The master IDU can be set through the wired controller or remote controller. The methods for setting the master IDU through the wired controller are as follows:

Method 1:

Step 1: Set an IDU to power-off status.

Step 2: Press and hold the "MODE" button on the wired controller for more than five seconds.

Step 3: Check whether the setting is successful. If it is, "MASTER" on the wired controller will be on. Otherwise, repeat steps 1 and 2.

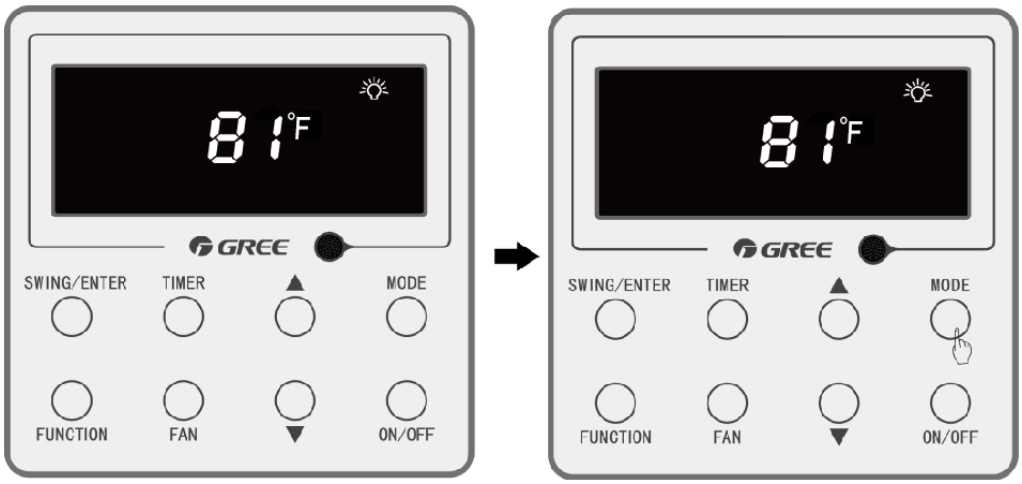

In power off status

Press “MODE” for 5 seconds

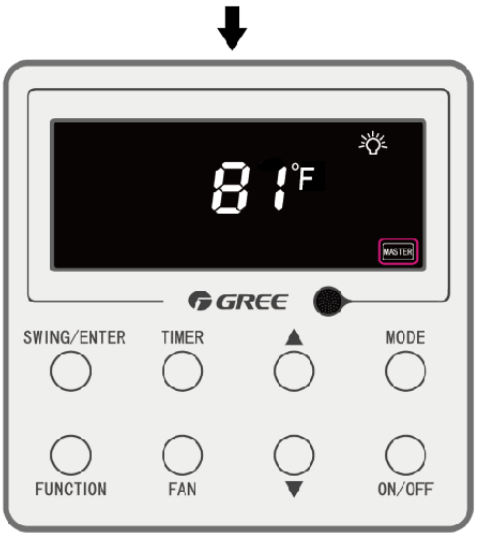

“MASTER” is on when the master indoor unit is successfully set.

Method 2:

Step 1: Press and hold the “FUNCTION” button for five seconds in power-on or power-off status to enter the parameter query interface.

Step 2: Press and hold the “FUNCTION” button for five seconds in "C00" status to enter the parameter setting interface.

Step 3: Press “▲” or “▼” to switch level 2 parameter codes till “P10” is displayed on the temperature area.

Step 4: Press the “MODE” button to set the parameter to "01" and then Press the “SWING/ENTER” button. If the setting is successful, "MASTER" on the wired controller will be on.

Master IDU Display

(1) For IDUs connected with wired controllers, "MASTER" on the wired controller connected with the master IDU will be on.

(2) For IDUs embedded or connected with LED panels, the operation LED on the LED panel of the master IDU will blink three times.

Note: After the master IDU is successfully set, stick the “ MASTER ” flag to the wired controller or unit panel for convenience of user operation and engineering maintenance. This flag is placed in the package bag of the ODU.

4.3.2 User Parameter Query

User parameters can be queried in power-on or power-off status.

(1) Press and hold the “FUNCTION” button for five seconds to enter the user parameter query interface. The temperature area displays “C00” and “View” is on.

(2) Select a parameter code by pressing “▲” or “▼”.

(3) Press the “SWING/ ENTER” button to return to the upper-level menu till quitting parameter query.

(4) For the user parameter query list of the XK79 wired controller, refer to the user parameter query list in XK46 user parameter query.

Note: In parameter query, the function of "SWING/ ENTER" on the XK79 wired controller is equivalent to the function of “ENTER/CANCEL” on the XK46 wired controller.

4.3.3 User Parameter Settings

User parameters can be set in power-on or power-off status.

(1) Press and hold the “FUNCTION” button for five seconds. The temperature area displays “C00”. Press and hold the “FUNCTION” button for another five seconds to enter the wired controller user parameter setting interface. The temperature area displays “P00”.

(2) Select a parameter code by pressing“▲” or “▼”. Press the “MODE” button to switch to parameter value settings. The parameter value blinks. Adjust the parameter value by pressing “▲” or “▼” and then press the “SWING/ ENTER” button to complete settings.

(3) Press the “SWING/ ENTER” button to return to the upper-level menu till quitting parameter settings.

(4) For the user parameter setting list of the XK79 wired controller, refer to the user setting query list in XK46 user parameter settings.

Note: In parameter settings, the function of "SWING/ ENTER" on the XK79 wired controller is equivalent to the function of “ENTER/CANCEL” on the XK46 wired controller.

4.3.4 Engineering Parameter Query

Engineering parameters can be queried in power-on or power-off status.

(1) Press and hold the “FUNCTION” button for five seconds to enter the engineering parameter query interface. The temperature area displays “C00” and “VIEW” is on.

(2) In "C00" status, continuously press the “MODE” button for three times to enter engineering parameter query.

(3) Select a parameter code by pressing “▲” or “▼”.

(4) Press the “SWING/CANCEL” button to return to the upper-level menu till quitting parameter query.

(5) For the engineering parameter query list of the XK79 wired controller, refer to the engineering parameter query list in XK46 engineering parameter query.

Note: In parameter query, the function of "SWING/CANCEL" on the XK79 wired controller is equivalent to the function of “ENTER/CANCEL” on the XK46 wired controller.

4.3.5 Engineering Parameter Settings

Engineering parameters can be set in power-on or power-off status.

(1) Press and hold the “FUNCTION” button for five seconds. The temperature area displays “C00”. Continuously press the “MODE” button for three times, and then press and hold the “FUNCTION” button for another five seconds to enter the wired controller engineering parameter setting interface. The temperature area displays “P00”.

(2) Select a parameter code by pressing “▲” or “▼”. Press the “MODE” button to switch to parameter value settings. The parameter value blinks. Adjust the parameter value by pressing“▲” or “▼” and then press the “SWING/CANCEL” button to complete settings.

(3) Press the “SWING/CANCEL” button to return to the upper-level menu till quitting parameter settings.

For the engineering parameter setting list of the XK79 wired controller, refer to the engineering setting query list in XK46 engineering parameter settings.

Note: In parameter settings, the function of "SWING/CANCEL" on the XK79 wired controller is equivalent to the function of “ENTER/CANCEL” on the XK46 wired controller.

4.4 Engineering Application Functions Operated through the YV1L1 Remote Controller

The YV1L1 remote controller provides all engineering application functions. It is set to common type by default upon factory departure. It can use engineering application functions only after being set to professional type. The following only describes engineering application functions. For other user operation functions, refer to the "Remote Controller Operating Instructions".

Method for setting the professional remote controller: Press "MODE" and "TEMP" simultaneously in power-off status. If "" blinks for three times, it indicates that the setting succeeds.

Method for restoring the common remote controller: Press "MODE" and "TEMP" simultaneously in power-off status. If "" blinks for three times, it indicates that the setting succeeds.

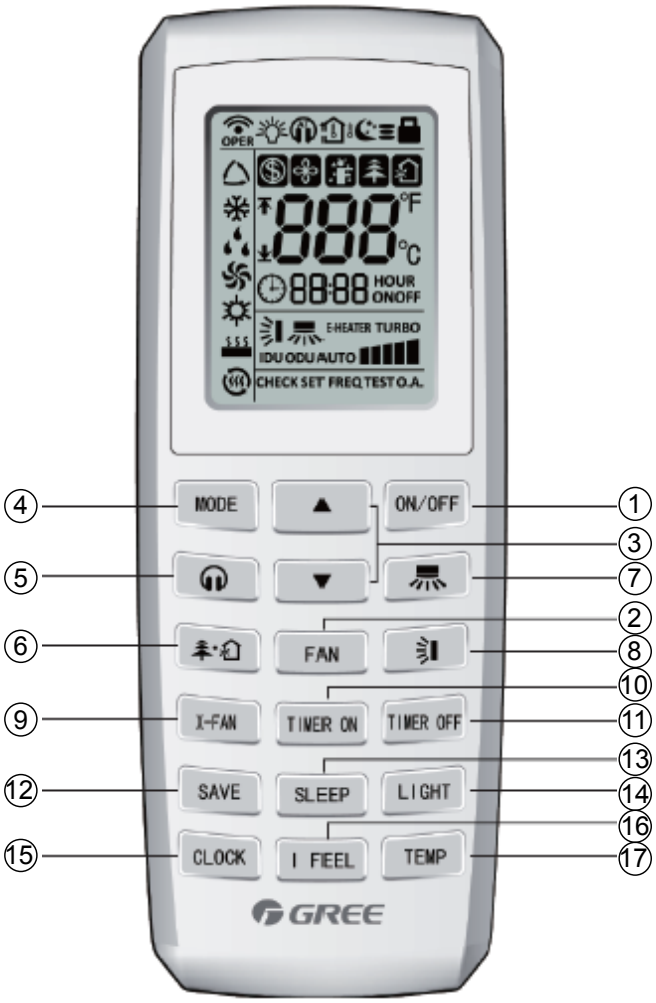

No.	Button name	Function
1	ON/OFF	Turn on or turn off the unit
2	FAN	Set fan speed
3	▲/▼	Set temperature and time
4	MODE	Set operation mode
5		Set quiet function
6		Set health function and air function
7		Set left & right swing status
8		Set up & down swing status
9	X-FAN	Set X-FAN function
10	TIMER ON	Set timer on function
11	TIMER OFF	Set timer off function
12	SAVE	Set energy-saving function
13	SLEEP	Set sleep function
14	LIGHT	Set light function
15	CLOCK	Set clock of the system
16	I FEEL	Set I FEEL function
17	TEMP	Switch temperature displaying type on the unit’s display

4.4.1 Master IDU Settings

The master IDU can be set through the wired controller or remote controller. The methods for setting the master IDU through the remote controller are as follows:

Step 1: Set an IDU to air-supply status and set the temperature to 30°C.

Step 2: Continuously press “—” and “+” for three times within five seconds.

Step 3: Check whether the setting is successful. If it is, the LED panel of the IDU will display "UC" for five seconds and "MASTER" on the wired controller will be on. Otherwise, repeat steps 1 and 2.

4.4.2 Parameter Query

Engineering application functions cover parameter query and parameter settings.

For parameter query, users can query user parameters and engineering parameters of the unit. The parameter query method is as follows:

(1) On the professional remote controller of YV1L1, press and hold " CLOCK " for five seconds to enter the parameter query status. The viewing text is displayed. The query code "C00" blinks in the temperature area.

(2) Press " ▲ ▼ " to switch the query code and select a unit parameter to be queried (see Table

(3) 2.5 for parameters that can be queried).

(4) If the timer area displays query sub-items, it indicates that there are level 2 query menus. Press

(5) " MODE " to enter level 2 query menu selection. The content blinks in the timer area. Press " ▲ ▼ " to switch query sub-items and select a level 2 menu to be queried.

(6) Press " TEMP " to confirm query and return to step 2.

After entering the engineering application function, the system automatically quits the engineering commissioning status if no valid operations are performed within 20 seconds. To directly quit the engineering commissioning status, press " CLOCK ".

Table 2.5 Query Parameters

Query Code	Query Content	Query Sub-item	Level 2 Query Content
C00	Invalid		
C01	Project number query of the current IDU		
C02	Capacity query of the current IDU		
C03	Indoor unit quantity query in the CAN1 network		
C04	Project number query of the master IDU		
C05	Historical fault query ingress of the current IDU	01	Fault 1
		02	Fault 2
		03	Fault 3
		04	Fault 4
		05	Fault 5
C06	Preferential operation query		
C07	Temperature query for environment temperature sensor of the current IDU		
C08	Prompt time query for air filter cleaning		
C10	Static pressure setting query of ODU	01	Module 1
		02	Module 2
		03	Module 3
		04	Module 4
C11	Indoor unit quantity query in one-to-many control mode		
C12	Temperature query for outdoor environment temperature sensor		
C13	CAN2 bus line ID query		
C14	Inlet-tube temperature query of IDU		
C15	Outlet temperature query of IDU		
C16	Opening degrees query of electronic expansion valve of IDU		
n2	Capacity configuration ratio upper-limit query of outdoor and IDUs		
n4	Highest capacity output limitation query		
n6	Historical fault query ingress of ODU	01	Fault 1
		02	Fault 2
		03	Fault 3
		04	Fault 4
		05	Fault 5
A6	Unit cooling/heating function		
A7	Outdoor silent mode		

4.4.3 Parameter Settings

For parameter settings, users can set user parameters and engineering parameters of the unit. The parameter setting method is as follows:

(1) After entering parameter query, switch the query code to "C00". Press and hold " CLOCK " for five seconds to enter the parameter setting status. The setting text is displayed and "P00" blinks in the temperature area.

(2) Press " ▲ ▼ " to switch the setting code and select a unit parameter to be set (see Table 2.6 for

(3) parameters that can be set.

(4) Press " TEMP " to enter parameter settings. The current parameter value blinks in the timer area. Press " ▲ ▼ " to change the parameter value.

(5) Press " TEMP " to confirm query and return to step 2.

(6) After entering engineering commissioning, the system automatically quits the engineering commissioning status if no valid operations are performed within 20 seconds. To directly quit the engineering commissioning status, press " CLOCK ".

Table 2.6 Setting Parameters

Setting Code	Setting Content	Setting Value
P00	Invalid	
P10	Master IDU settings	00: not changing the current settings 01: setting the corresponding IDU to master IDU 001-255: setting the IDU corresponding to *** to master IDU
P15	Power-down memory mode settings	00: standby after power-down recovery 01: restoring the original status after power-down recovery
P17	Historical fault clearing	00: not cleared 01: cleared
P20	Indoor environment temperature value	01: temperature sensor of air return vent 02: temperature sensor of wired controller 03: temperature sensor of air return vent for cooling, dehumidifying, and air supply; temperature sensor of wired controller for heating 04: temperature sensor of wired controller for cooling, dehumidifying, and air supply; temperature sensor of air return vent for heating and automatic mode
P21	Corrected value settings of environment temperature sensor of IDU (for cooling, dehumidifying, and air supply)	-15 to 15
P22	Corrected value settings of environment temperature sensor of IDU (for heating)	-15 to 15
P30	Static pressure settings for indoor fan	Type 1: 03.04.05.06.07 Type 2: 01.02.03.04.05.06.07.08.09
P31	High-ceiling installation settings	00: standard-ceiling installation height 01: high-ceiling installation height
P32	Capacity adjustment function of IDU	-40% to +40%
P34	Repeating validity for time-point timing	00: invalid 01: valid

Setting Code	Setting Content	Setting Value
P35	Factory setting recovery for user functions	00: invalid 01: factory setting recovery
P36	Factory setting recovery for engineering settings	00: invalid 01: factory setting recovery
P40	Prevention for heat collection	00: disabled 10: 10 seconds 20: 20 seconds 30: 30 seconds 40: 40 seconds 50: 50 seconds 60: 60 seconds
P42	Project number settings of IDU	1-255
P43	Preferential operation settings	00: no preferential operation 01: preferential operation
P44	One-key project number setting query for IDU	00: not displayed 01: displayed
P45	One-key project number reset for IDU	00: invalid 01: project number reset
P46	Accumulated time clearing for air filter cleaning	00: not cleared 01: cleared
P47	Prompt settings for air filter cleaning	00: no cleaning prompt settings 10-39: The first digit indicates the pollution degree of the using place and the second digit indicates the accumulated operating time of IDU. The two digits are described as follows: Slight pollution: The first digit is "1". If the second digit is "0", it indicates that the accumulated operating time is 5500 hours. The accumulated operating time is added by 500 hours when the second digit is increased by "1”. When the second digit is “9”, the accumulated operating time is 10000 hours. Medium pollution: The first digit is "2". If the second digit is "0", it indicates that the accumulated operating time is 1400 hours. The accumulated operating time is added by 400 hours when the second digit is increased by "1". When the second digit is "9", the accumulated operating time is 5000 hours. Heavy pollution: The first digit is "3". If the second digit is "0", it indicates that the accumulated operating time is 100 hours. The accumulated operating time is added by 100 hours when the second digit is increased by "1". When the second digit is "9", the accumulated operating time is 1000 hours.
n0	System conservation operation settings	00: comfortability preferred 01: conservation preferred
n1	Defrosting period settings	40: 40 minutes 50: 50 minutes 60: 60 minutes
n3	Forcible defrosting	00: no defrosting 01: forcible defrosting
A7	Silent function of ODU	00: no silent function 01-09: intelligent nighttime silent mode 10-12: forcible silent mode
n4	Highest capacity output limitation settings	08: highest energy consumption limitation being 80% 09: highest energy consumption limitation being 90% 10: no conservation limitation

4.5 Engineering Application Functions Operated through the YAP1F Remote Controller

4.5.1 The method for setting the master IDU through the YAP1F remote controller is as follows

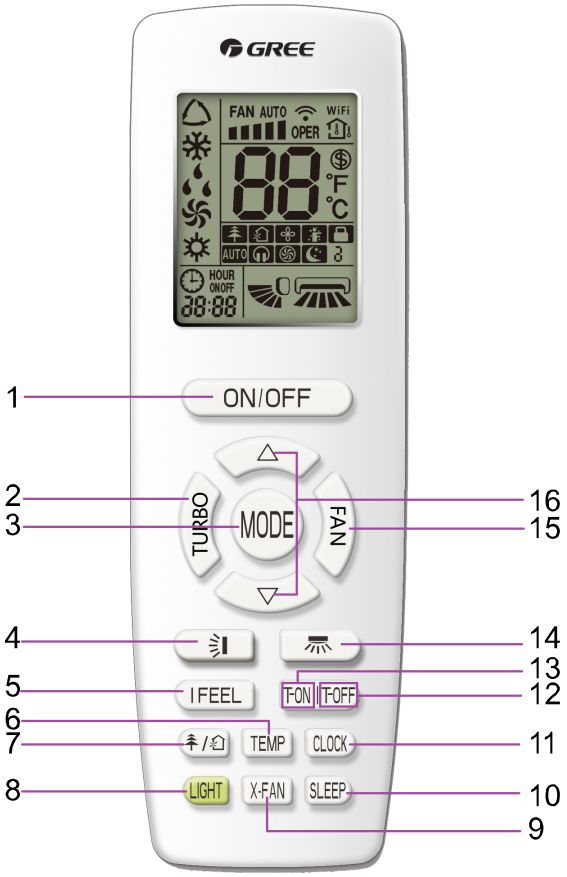

No.	Button name	Function
1	ON/OFF	Turn on or turn off the unit
2	TURBO	Set turbo function
3	MODE	Set operation mode
4		Set up&down swing status
5	I FEEL	Set I FEEL function
6	TEMP	Switch temperature displaying type on the unit's display
7		Set health function and air function
8	LIGHT	Set light function
9	X-FAN	Set X-FAN function
10	SLEEP	Set sleep function
11	CLOCK	Set clock of the system
12	TOFF	Set timer off function
13	TON	Set timer on function
14		Set left&right swing status
15	FAN	Set fan speed
16	△/▽	Set temperature and time

For details about the above figures, refer to the instructions 66174100016.

Perform settings by pressing “▲” and “▼” in air supply mode:

(1) Set the temperature to 30°C.

(2) Press “▼” and then “▲” in five seconds. Repeat this operation for three times.

After successful settings, “UC” is displayed on the receiving indicator panel of the remote controller for five seconds and “MASTER” is displayed on the wired controller.

4.5.2 IDU Project Number Query by Remote Controller YAP1F

(1) Query method for project number of single IDU:

Enter query:

Under fan mode, set temperature in 16°C, press “Light” button for 5 times continuously within 5 seconds and then the IDU light board will display its project number.

Exit query:

1) After entering query status, press “Light” button for 5 times continuously within 5 seconds to exit query status.
2) After 30min, it will exit query status automatically and display normal status.

(2) Query method for project numbers of all IDUs in a single system:

Enter query:

Under fan mode, set temperature in 30°C, press “Light” button for 5 times continuously within 5 seconds and then the light boards of all indoor units will display their project numbers respectively.

Exit query:

1) After entering query status, press “Light” button for 5 times continuously within 5 seconds to exit query status.
2) After 30min, it will exit query status automatically and display normal status.

INSTALLATION

CHAPTER 3 INSTALLATION

1 Engineering Installation Preparation and Notice

1.1 Installation Notice

Personnel and property safety are highly concerned during the entire installation process. Installation implementation must abide by relevant national safety regulations to ensure personnel and property safety.

All personnel involved in the installation must attend safety education courses and pass corresponding safety examinations before installation. Only qualified personnel can attend the installation. Relevant personnel must be held responsible for any violation of the regulation.

1.2 Installation Key Points and Importance

VRF air conditioning systems use refrigerant, instead of other agent, to directly evaporate to carry out the system heat. High level of pipe cleanness and dryness is required in the system. Since various pipes need to be prepared and laid out onsite, carelessness or maloperation during installation may leave impurities, water, or dust inside refrigerant pipes. If the design fails to meet the requirement, various problems may occur in the system or even lead to system breakdown.

Problems that usually occur during installation are as follows:

No.	Installation Problem	Possible Consequence
1	Dust or impurities enter into the refrigeration system.	Pipes are more likely to be blocked; air conditioning performance is reduced; compressor wear is increased or even hinder the normal operation of the system and burn the compressor.
2	Nitrogen is not filled into the refrigerant pipe or insufficient Nitrogen is filled before welding.	Pipes are more likely to be blocked; air conditioning performance is reduced; compressor wear is increased or even hinder the normal operation of the system and burn the compressor.
3	The vacuum degree in the refrigerant pipe is insufficient.	The refrigeration performance is reduced. The system fails to keep normal operation due to frequent protection measures. When the problem getting serious, compressor and other major components can be damaged.
4	Water enters into the refrigeration system.	Copper plating may appear on the compressor and reduce the compressor efficiency with abnormal noise generated; failures may occur in the system due to ice plug.
5	The refrigerant pipe specifications do not meet the configuration requirements.	Smaller configuration specifications can increase the system pipe resistance and affect the cooling performance; larger configuration specifications are waste of materials and can also reduce the cooling performance.
6	Refrigerant pipe is blocked.	The cooling performance is reduced; in certain cases, it may cause long-term compressor operating under overheat conditions; the lubricating effect can be affected and the compressor may be burnt if impurities were mixed with the lubricating oil.
7	Refrigerant pipe exceeds the limit.	The loss in pipe is considerable and the unit energy efficiency decreases, which are harmful for long-term running of the system.
8	Incorrect amount of refrigerant is filled.	The system cannot correctly control the flow allocation; the compressor may be operating under over-heating environment or running when the refrigerant flows back to the compressor.
9	The refrigerant pipe leaks.	Insufficient refrigerant circulating in the system decreases the cooling performance of the air conditioner. Long-term operation under such circumstance may cause an overheating compressor or even damage the compressor.
10	Water drainage from the condensate water pipe is not smooth.	Residual water in IDUs can affect the normal operation of the system. The possible water leakage can damage the IDU's decoration.

No.	Installation Problem	Possible Consequence
11	The ratio of slop for condensate water pipe is insufficient or the condensate water pipe is incorrectly connected.	Reverse slop or inconsistent connection of condensate water pipe can hinder the smooth drainage and cause leakage of the IDU.
12	The air channel is improperly fixed.	The air channel will deform; vibration and noise occur during unit operating.
13	The guide vane of air channel is not reasonably manufactured.	Uneven air quantity allocation reduces the overall performance of the air conditioner.
14	The refrigerant pipe or condensate water pipe does not meet the insulation requirement.	Water can easily condensate and drip to damage the indoor decoration, or even trigger the protection mode of system due to overheating operation.
15	The installation space for IDU is insufficient.	Since there is a lack of space for maintenance and checking, indoor decoration might need to be damaged during such operation.
16	The IDU or the location of the air outlet or return air inlet is not designed reasonably.	The air outlet or return air inlet may be short-circuited, thus affecting the air conditioning performance.
17	The ODU is improperly installed.	The ODU is difficult to be maintained; unit exhaust is not smooth, which reduces the heat exchanging performance or even prevent the system from normal operation; in addition, the cold and hot air for heat exchange and the noise may annoy people in surrounding areas.
18	Power cables are incorrectly provided.	Unit components may be damaged and potential safety hazard may occur.
19	Control communication cables are incorrectly provided or improperly connected.	The normal communication in the system fails or the control over IDUs and ODUs turn in a mess.
20	Control communication cables are not properly protected.	The communication cables are short-circuited or disconnected, and the unit cannot be started up due to communication failure.

Understand the special requirement (if any) for unit installation before implementation to ensure installation quality. Relevant installers must have corresponding engineering construction qualifications.

Special type operators involved in the engineering implementation, such as welders, electricians, and refrigeration mechanics must have relevant operating licenses and are accredited with vocational qualification certification.

2 Installation Materials Selection

The materials, equipment and instruments used during air conditioning engineering construction must have certifications and test reports. Products with fireproof requirements must be provided with fireproof inspection certificates and must meet national and relevant compulsory standards. If environmentally-friendly materials are to be used as required by customers, all such materials must meet national environmental protection requirement and be provided with relevant certificates.

2.1 Refrigerant Piping

(1) Material requirement: Dephosphorization drawing copper pipe for air conditioners.

(2) Appearance requirement: The inner and outer surface of pipe should be smooth without pinhole, crack, peeling, blister, inclusion, copper powder, carbon deposition, rust, dirt or severe oxide film, and without obvious scratch, pit, spot and other defects.

(3) Test report: Certifications and quality test reports must be provided.

(4) The tensile strength must be at least 240 kgf/mm².

(5) Specifications requirement.

R410A Refrigerant System		
OD (mm/inch)	Wall Thickness (mm)	Model
Φ6.35(1/4)	≥0.8	O
Φ9.52(3/8)	≥0.8	O
Φ12.70(1/2)	≥0.8	O
Φ15.9(5/8)	≥1.0	O
Φ19.05(3/4)	≥1.0	1/2 H

(6) After the inner part of the copper pipe is cleaned and dried, the inlet and outlet must be sealed tightly by using pipe caps, plugs or adhesive tapes.

2.2 Condensate Water Pipe

(1) Pipes that can be used for air conditioner drainage include: water supplying UPVC pipe, PP-R pipe, PP-C pipe, and HDG steel pipe;

(2) All relevant certificates and quality test reports are provided.

(3) Requirements for specifications and wall thickness.

Water supplying UPVC pipe:

Φ32mm(1-1/4inch)×2mm(1/16inch), Φ40mm(1-3/4inch)×2mm(1/16inch),

Φ50mm(1-15/16inch)×2.5mm(1/8inch).

HDG steel pipe:

Φ25mm(1inch)×3.25mm(1/8inch), Φ32mm(1-1/4inch)×3.25mm(1/8inch).

Φ40mm(1-3/4inch)×3.5mm(1/8inch), Φ50mm(1-15/16inch)×3.5mm(1/8inch).

2.3 Insulation Material

(1) Rubber foam insulation material.

(2) Flame retardancy level: B1 or higher.

(3) Refractoriness: at least 120°C (248°F).

(4) The insulation thickness of condensate water pipe: at least 10mm (3/8inch).

(5) When the diameter of copper pipe is equal to or greater than Φ15.9mm(5/8inch), the thickness of insulation material should be at least 20mm(3/4inch); when the diameter of copper pipe is less than 15.9mm(5/8inch), the thickness of insulation material should be at least 15 mm(5/8inch).

2.4 Communication Cable and Control Cable

NOTICE! For air conditioning units installed in places with strong electromagnetic interference, shielded wire must be used as the communication cables of the IDU and wired controller, and shielded twisted pairs must be used as the communication cables between IDUs and between the IDU and ODU.

Communication cable selection for ODU and IDUs

Material Type	Total Length L (m) of Communication Cable between Indoor Unit and Indoor (Outdoor) Unit	Wire size (mm^2/AWG)	Material Standard	Remarks
Light/Ordinary polyvinyl chloride sheathed cord. (60227 IEC 52 /60227 IEC 53)	L≤1000m(3280-5/6ft)	≥2×0.75 (2×AWG 18)	IEC 60227-5	(1) If the wire diameter is enlarged to 2×1 mm^2 (2×AWG16), the total communication line length can reach 1500 m (4921-1/4ft.). (2) The cord shall be Circular cord (the cores shall be twisted together). (3) If unit is installed in places with intense magnetic field or strong interference, it is necessary to use shielded wire.

Communication cable selection for IDU and wired controller

Material type	Total length of communication line between indoor unit and wired controller	Wire size(mm^2/AWG)	Material Standard	Remarks
Light/Ordinary polyvinyl chloride sheathed cord. (60227 IEC 52 /60227 IEC 53)	L≤250m(820-1/5ft)	2×0.75 ~2×1.25 (2×AWG18 ~2×AWG16)	IEC 60227-5	(1) Total length of communication line can't exceed 250m(820-1/5ft.). (2) The cord shall be Circular cord (the cores shall be twisted together). (3) If unit is installed in places with intense magnetic field or strong interference, it is necessary to use shielded wire.

2.5 Power Cable

Only copper conductors can be used as power cables. The copper conductors must meet relevant national standard and satisfy the carrying capacity of unit.

2.6 Hanger Rod and Support

(1) Hanger rod: M8 or M10.

(2) U-steel: 14# or above.

(3) Angle steel: 30mm (1-1/6inch)×30mm (1-1/6inch)×3mm (1/8inch) or above.

(4) Round steel: Φ10mm (4/10inch) or above.

3 Installation of Indoor Unit

3.1 Installation of Low Static Pressure Duct Type Indoor Unit

3.1.1 Outline and Installation Dimension

The following diagram is applicable for units with the cooling capacity ranging from 7k Btu/h to 22kBtu/h.

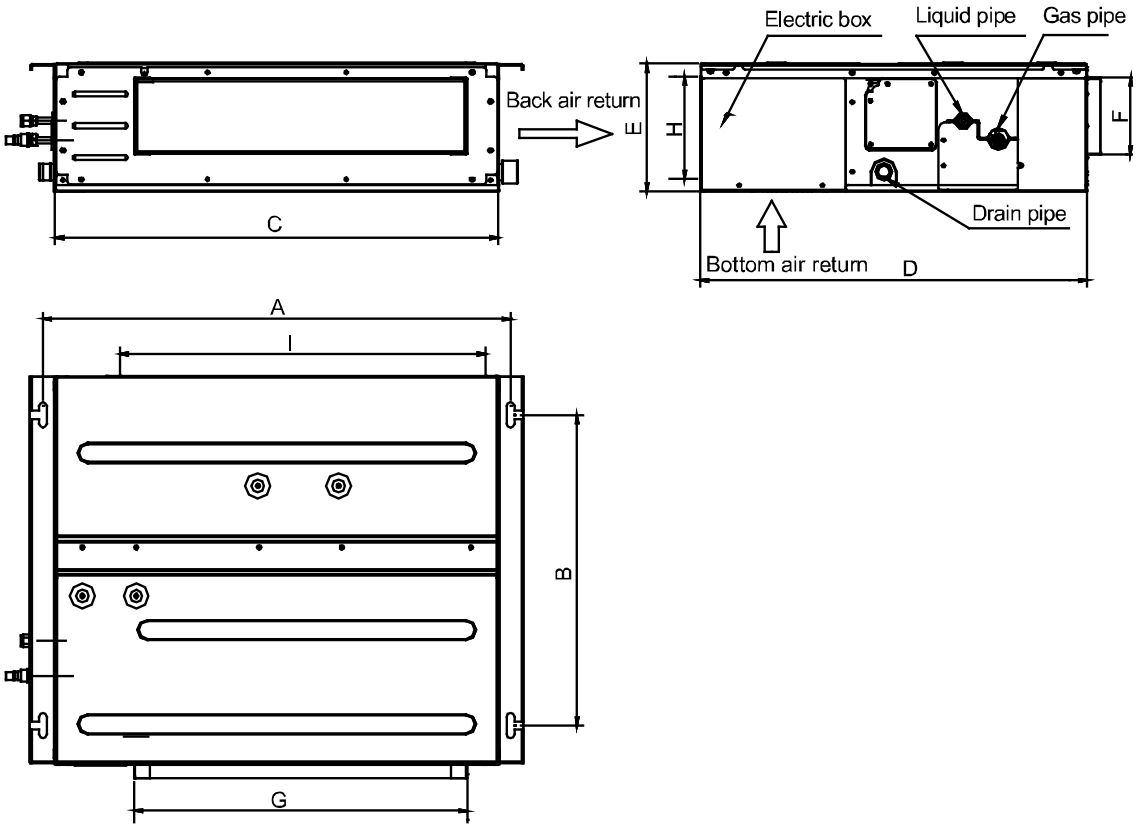

The following table lists the detailed dimensions.

Unit: mm(inch)

Model \ Item	A	B	C	D	E	F	G	H	I
GMV-ND07PLS/A-T(U) GMV-ND09PLS/A-T(U) GMV-ND12PLS/A-T(U)	742 (29 3/16)	491 (19 5/16)	700 (27-1/2)	615 (24-1/4)	200 (7-7/8)	121 (4-3/4)	528 (20-13/16)	161 (6-5/16)	580 (22-13/16)
GMV-ND14PLS/A-T(U)	942 (37-1/16)	491 (19-5/16)	900 (35-3/8)	615 (24-1/4)	200 (7-7/8)	121 (4-3/4)	728 (28-11/16)	161 (6-5/16)	780 (30-11/16)
GMV-ND18PLS/A-T(U) GMV-ND22PLS/A-T(U)	1142 (44-15/16)	491 (19-5/16)	1100 (43-1/4)	615 (24-1/4)	200 (7-7/8)	121 (4-3/4)	928 (36--9/16)	161 (6-5/16)	980 (38-9/16)

3.1.2 Installation Space

Unit: mm(inch)

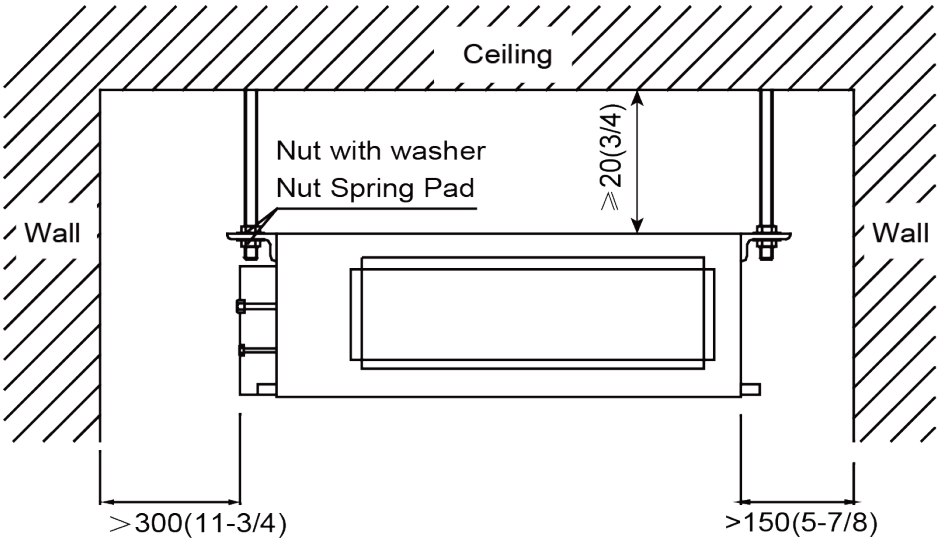

3.1.3 Installation Notice

(1) Installation dimension (refer to the outline dimension in the figure).

(2) Installation foundation.

(3) Make sure the top hanging rod, ceiling and building structure have sufficient strength to withstand the weight of unit.

(4) Installation site and environment.

1) Keep the unit from insolation and rainch

2) Keep the unit from fire, flammable objects, corrosive gap or exhaust gas.

3) Please reserve ventilation space.

4) Please reserve sufficient space for maintenance.

5) Please take proper measures to reduce noise and vibration.

(5) Electrical installation of unit.

All electrical installation must be done by professionals according to national and local laws and regulations.

The unit must be grounded reliably. Please connect wire according to the wiring diagram on the unit.

3.1.4 Selection of Air Switch and Power Cord

Model	Power Cord Size	Air Switch apacity (A)	Minimum Sectional Area of Ground Wire (mm²/AWG)	Minimum Sectional Area of Power Cord (mm²/AWG)
GMV-ND07PLS/A-T(U)	208/230V/60Hz	15	1.0/AWG18	1.0/AWG18
GMV-ND09PLS/A-T(U)	208/230V/60Hz	15	1.0/AWG18	1.0/AWG18
GMV-ND12PLS/A-T(U)	208/230V/60Hz	15	1.0/AWG18	1.0/AWG18
GMV-ND14PLS/A-T(U)	208/230V/60Hz	15	1.0/AWG18	1.0/AWG18
GMV-ND18PLS/A-T(U)	208/230V/60Hz	15	1.0/AWG18	1.0/AWG18
GMV-ND22PLS/A-T(U)	208/230V/60Hz	15	1.0/AWG18	1.0/AWG18

3.1.5 Outline Dimension and Installation Spots

Equip with a service port after lifting the unit. For the convenience of maintenance, the service port should be on one side of the electric box and below unit's lower level. Below are the outline dimension applicable to indoor units of GMV-ND05~24PLS/B1-T(U).

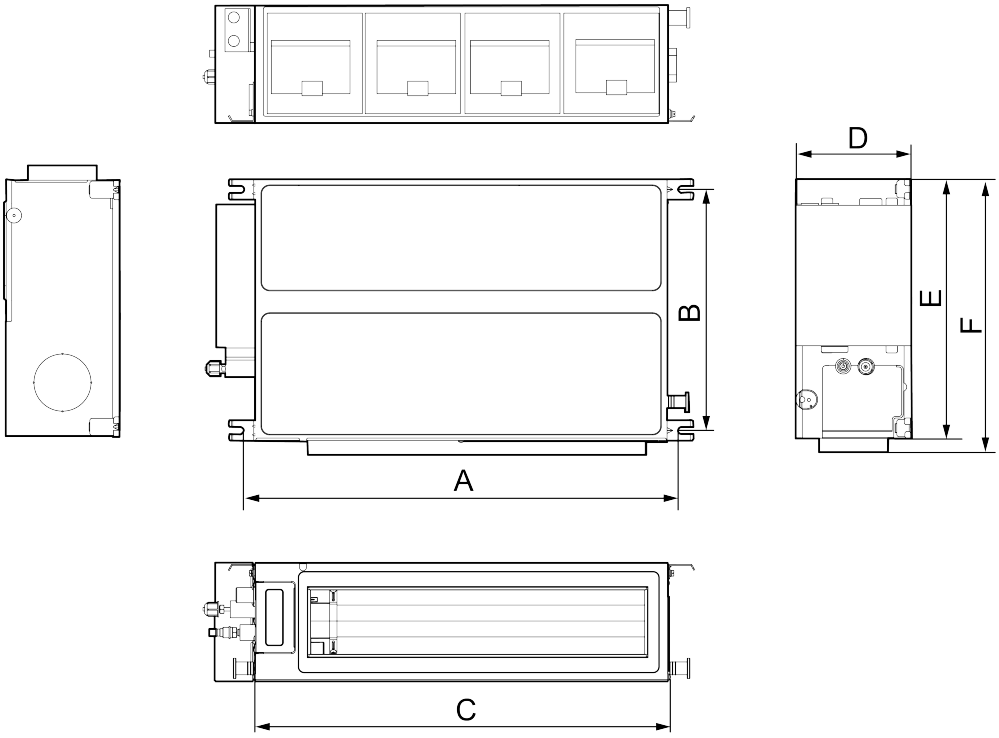

Fig 3.1.5

Below are dimensions of A, B, C, etc. for different models:

Unit: mm(in.)

Item Model	A	B	C	D	E	F
GMV-ND05~12PLS/B1-T(U)	760 (30)	415 (16-3/8)	710 (27-15/16)	200 (7-14/16)	462 (18-3/16)	486 (19-2/16)
GMV-ND14~18PLS/B1-T(U)	1060 (41-3/4)	415 (16-3/8)	1010 (39-12/16)	200 (7-14/16)	462 (18-3/16)	486 (19-2/16)
GMV-ND24PLS/B1-T(U)	1360 (53-1/2)	415 (16-3/8)	1310 (51-9/16)	200 (7-14/16)	462 (18-3/16)	486 (19-2/16)

3.1.6 Installation Space

Lift up the unit to the ceiling and secure it on the bolt. Use specialized nut to secure the unit.

Unit: mm(in.)

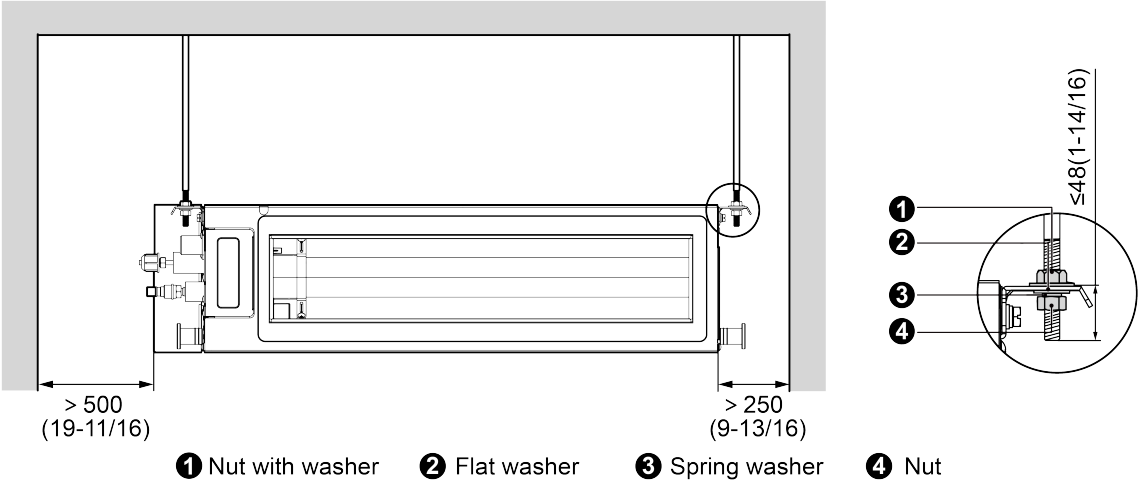

Fig 3.1.6

3.1.7 Installation Notice

(1) Before installation, please finish the preparation work of all pipes (connection pipe, drain pipe) and wires (wired controller wire, connection wire of IDU and ODU) that need to be connected with the indoor unit.

(2) Punch holes on the ceiling (air return opening or air inlet). Ceiling may have to be strengthened to make it level and to prevent it from vibration. You may consult user or constructor for details.

(3) If the ceiling is not strong enough, you can install a beam bracket in a corner and secure the unit on the beam

3.1.8 Selection of Air Switch and Power Cord

Model	Power Supply	Minimum Circuit Ampacity (A)	Maximum Overcurrent Protection (A)
GMV-ND05PLS/B1-T(U)	208/230V 1Ph 60Hz	1	15
GMV-ND07PLS/B1-T(U)		1	15
GMV-ND09PLS/B1-T(U)		1	15
GMV-ND12PLS/B1-T(U)		1	15
GMV-ND14PLS/B1-T(U)		1	15
GMV-ND18PLS/B1-T(U)		1	15
GMV-ND24PLS/B1-T(U)		1	15

3.2 Installation of Slim Duct Type Indoor Unit

3.2.1 Outline and Installation Dimension

The following diagram is applicable for units with the cooling capacity ranging from 06kBtu/h to 24kBtu/h.

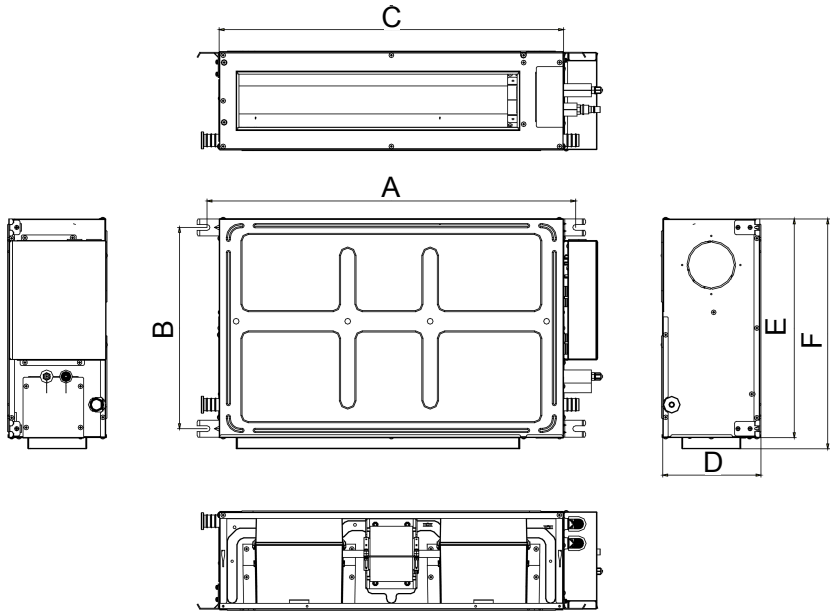

The following table lists the detailed dimensions.

Item / Model	A	B	C	D	E	F
GMV-ND06~12PLS/B-T(U)	760 (30)	415 (16-3/8)	710 (28)	200 (17-7/8)	462 (18-3/16)	486 (19-2/16)
GMV-ND14~18PLS/B-T(U)	1060 (41-3/4)	415 (16-3/8)	1010 (39-3/4)	200 (17-7/8)	462 (18-3/16)	486 (19-2/16)
GMV-ND24PLS/B-T(U)	1360 (53-1/2)	415 (16-3/8)	1310 (51-3/4)	200 (17-7/8)	462 (18-3/16)	486 (19-2/16)

3.2.2 Installation Space

Unit: mm(inch)

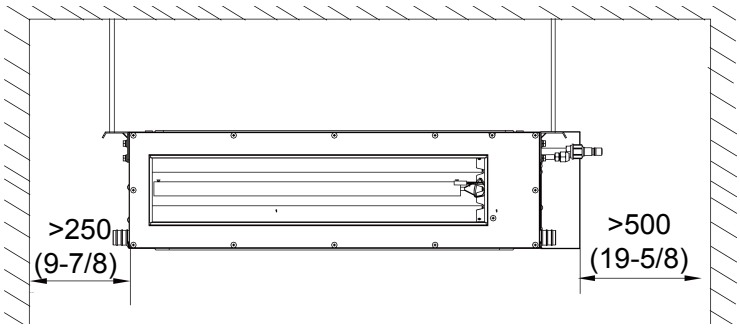

3.2.3 Installation Notice

(1) Installation dimension (refer to the outline dimension in the figure).

(2) Installation foundation.

(3) Make sure the top hanging rod, ceiling and building structure have sufficient strength to withstand the weight of unit.

(4) Installation site and environment.

1) Keep the unit from insolation and rainch

2) Keep the unit from fire, flammable objects, corrosive gap or exhaust gas.

3) Please reserve ventilation space.

4) Please reserve sufficient space for maintenance.

5) Please take proper measures to reduce noise and vibration.

(5) Electrical installation of unit.

All electrical installation must be done by professionals according to national and local laws and regulations.

The unit must be grounded reliably. Please connect wire according to the wiring diagram on the unit.

3.2.4 Selection of Air Switch and Power Cord

Model	Power Cord Size	Air Switch apacity (A)	Minimum Sectional Area of Ground Wire (mm^2 /AWG)	Minimum Sectional Area of Power Cord (mm^2 /AWG)
GMV-ND06PLS/B-T(U)	208/230V/60Hz	15	1.0/AWG18	1.0/AWG18
GMV-ND07PLS/B-T(U)	208/230V/60Hz	15	1.0/AWG18	1.0/AWG18
GMV-ND09PLS/B-T(U)	208/230V/60Hz	15	1.0/AWG18	1.0/AWG18
GMV-ND12PLS/B-T(U)	208/230V/60Hz	15	1.0/AWG18	1.0/AWG18
GMV-ND14PLS/B-T(U)	208/230V/60Hz	15	1.0/AWG18	1.0/AWG18
GMV-ND18PLS/B-T(U)	208/230V/60Hz	15	1.0/AWG18	1.0/AWG18
GMV-ND24PLS/B-T(U)	208/230V/60Hz	15	1.0/AWG18	1.0/AWG18

3.3 Installation of Four-way Cassette Type Indoor Unit

3.3.1 Requirements for External Dimensions and Installation and Maintenance Spaces

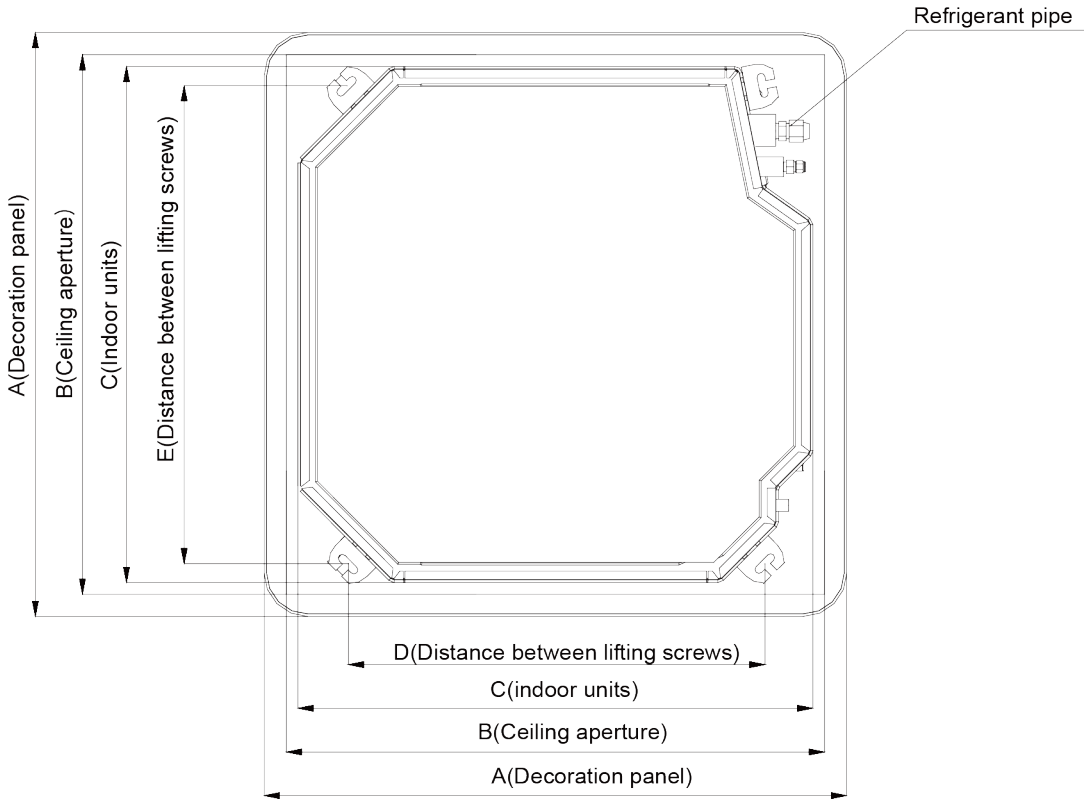

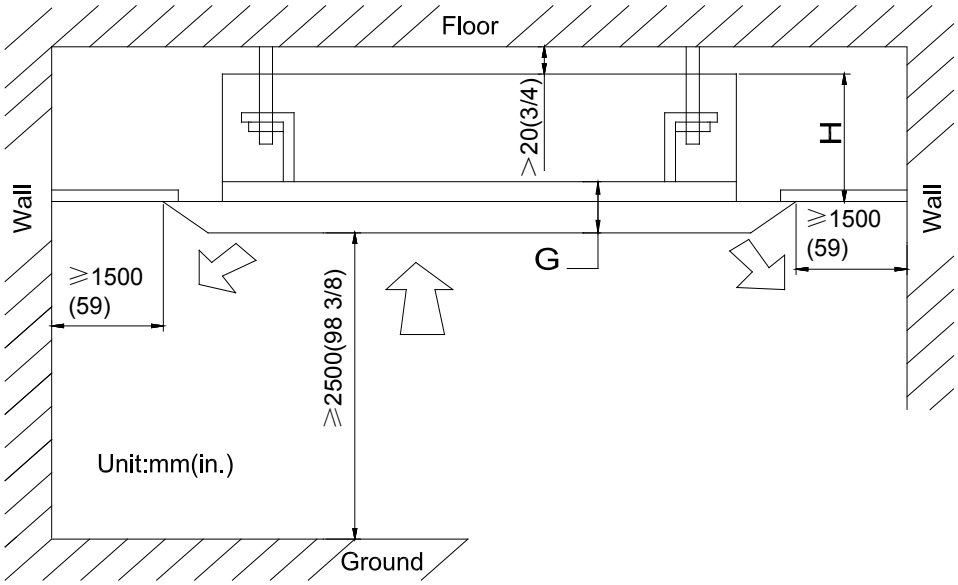

Unit: mm (inch)

Model	A	B	C	D	E	G	H
GMV-ND07T/A-T(U)	950 (37-3/8)	890 (35)	840 (33)	680 (26-3/4)	780 (30-3/4)	65 (2-1/2)	210 (8-1/4)
GMV-ND09T/A-T(U) GMV-ND12T/A-T(U) GMV-ND15T/A-T(U) GMV-ND18T/A-T(U) GMV-ND24T/A-T(U)	950 (37-3/8)	890 (35)	840 (33)	680 (26-3/4)	780 (30-3/4)	65 (2-1/2)	260 (10-1/4)

Model	A	B	C	D	E	G	H
GMV-ND30T/A-T(U) GMV-ND36T/A-T(U) GMV-ND42T/A-T(U) GMV-ND48T/A-T(U)	950 (37-3/8)	890 (35)	840 (33)	680 (26-3/4)	780 (30-3/4)	65 (2-1/2)	340 (13-3/8)

3.3.2 Installation Notice

- This indoor unit may be installed on ceilings up to 3.5m(137-3/4inch) in height(for 30~48k units: 4.0m(157-1/2inch)). Install then unit higher than 2.5m(98-3/8inch) to avoid accidental touching.
- The unit shall be installed by the professional personnel according to this installation instruction to ensure proper use.
- Please contact the local Gree appointed service center before installation. Any malfunction caused by the unit that is not installed by the Gree appointed service center would probably not be dealt with on time because of the inconvenience of the business contact.
- It should be guided under the professional personnel when the air conditioner unit is moved to other place.
- The unit shall be installed in accordance with national standards or local regulations.
- Only qualified personnel can carry out installation work, please contact with local dealer before installation.
- Make sure all the installation work completed before energizing.
- The appliances are not accessible to general public.

3.3.3 Selection of Air Switch and Power Cord

Model	Power Cord Size	Air Switch apacity (A)	Minimum Sectional Area of Ground Wire (mm^2 /AWG)	Minimum Sectional Area of Power Cord (mm^2 /AWG)
GMV-ND07T/A-T(U)	208/230V/60Hz	15	1.0/AWG18	1.0/AWG18
GMV-ND09T/A-T(U)	208/230V/60Hz	15	1.0/AWG18	1.0/AWG18
GMV-ND12T/A-T(U)	208/230V/60Hz	15	1.0/AWG18	1.0/AWG18
GMV-ND15T/A-T(U)	208/230V/60Hz	15	1.0/AWG18	1.0/AWG18
GMV-ND18T/A-T(U)	208/230V/60Hz	15	1.0/AWG18	1.0/AWG18
GMV-ND24T/A-T(U)	208/230V/60Hz	15	1.0/AWG18	1.0/AWG18
GMV-ND30T/A-T(U)	208/230V/60Hz	15	1.0/AWG18	1.0/AWG18
GMV-ND36T/A-T(U)	208/230V/60Hz	15	1.0/AWG18	1.0/AWG18
GMV-ND42T/A-T(U)	208/230V/60Hz	15	1.0/AWG18	1.0/AWG18
GMV-ND48T/A-T(U)	208/230V/60Hz	15	1.0/AWG18	1.0/AWG18

3.4 Installation of Wall-mounted Indoor Unit

3.4.1 Outline and Installation Dimension

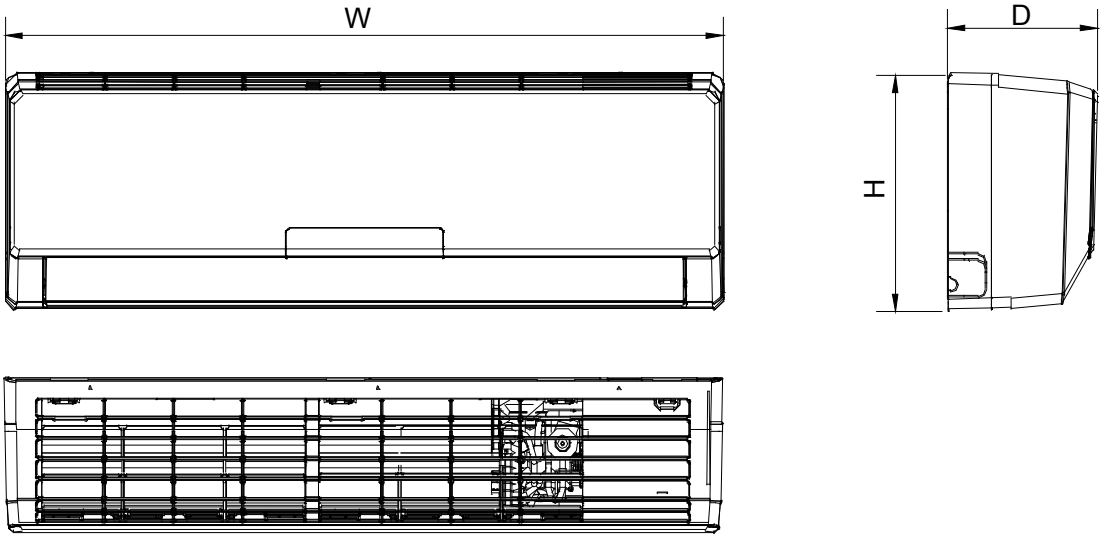

Unit: mm(inch)

Model	W	H	D
GMV-N07G/A3A-D(U) GMV-N09G/A3A-D(U) GMV-N07G/E3A-D(U) GMV-N09G/E3A-D(U)	843 (33-3/16)	275 (10-13/16)	180 (7-1/16)
GMV-N12G/A3A-D(U) GMV-N18G/A3A-D(U) GMV-N12G/E3A-D(U) GMV-N18G/E3A-D(U)	940 (37)	298 (11-3/4)	200 (7-7/8)
GMV-N24G/A3A-D(U) GMV-N24G/E3A-D(U)	1008 (39-11/16)	319 (12-9/16)	221 (8-11/16)
GMV-ND06G/B4B-T(U) GMV-ND07G/B4B-T(U) GMV-ND09G/B4B-T(U) GMV-ND12G/B4B-T(U)	845 (33-1/4)	289 (11-3/8)	209 (8-1/4)
GMV-ND14G/B4B-T(U)	970 (38-3/16)	300 (11-13/16)	224 (8-13/16)
GMV-ND18G/B4B-T(U) GMV-ND24G/B4B-T(U)	1078 (42-7/16)	325 (12-13/16)	246 (9-11/16)
GMV-ND30G/B4B-T(U) GMV-ND36G/B4B-T(U)	1350 (53-1/8)	326 (12-13/16)	258 (10-3/16)

3.4.2 Installation Space

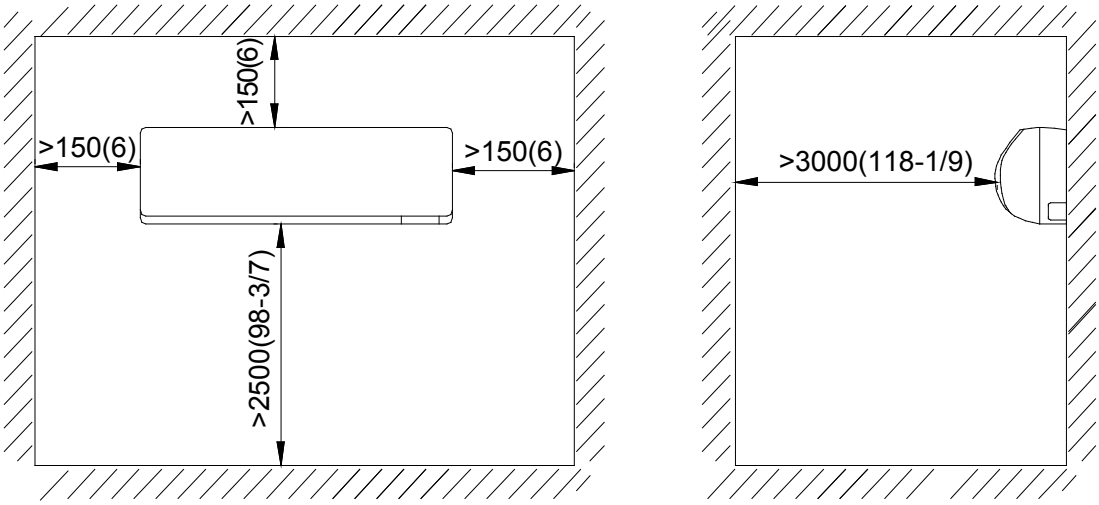

3.4.3 Installation Notice

(1) Installation dimension (refer to the outline dimension in the figure shown above).

(2) Installation foundation.

Make sure the top hanger has sufficient strength to withstand the weight of unit.

(3) Installation site and environment.

1) Keep the unit from insolation and rainch
2) Water can be drained from drainage pipe conveniently.
3) Keep the unit from fire, flammable objects, corrosive gap or exhaust gas.
4) There can’t be any obstacle at air inlet and air outlet to in order to keep good ventilation.
5) Please reserve sufficient space for maintenance.
6) Please take proper measures to reduce noise and vibration.

3.4.4 Electrical Installation of Unit

All electrical installation must be done by professionals according to national and local laws and regulations.

The unit must be grounded reliably according to related requirements.

Please connect wire according to the wiring diagram on the unit.

3.5 Installation of Console Type Indoor Unit

3.5.1 Outline and Installation Dimension

Unit: mm(inch)

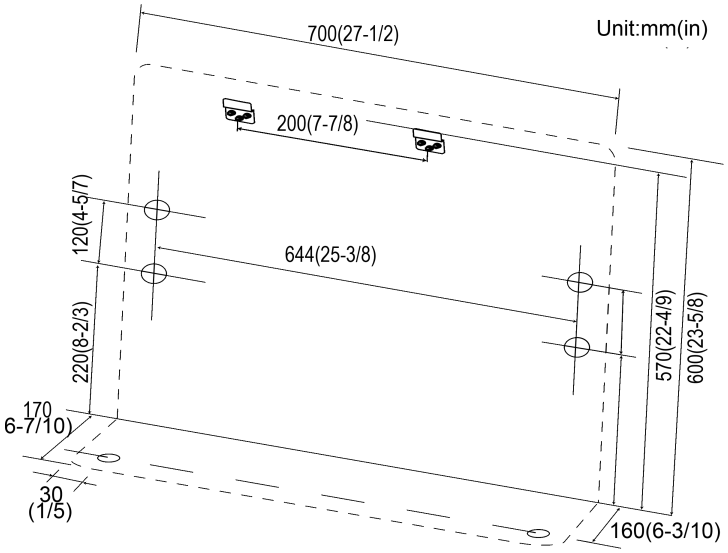

Location for securing the installation pane

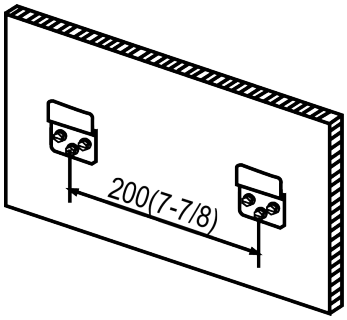

Schematic drawing of hooks

3.5.2 Installation Space

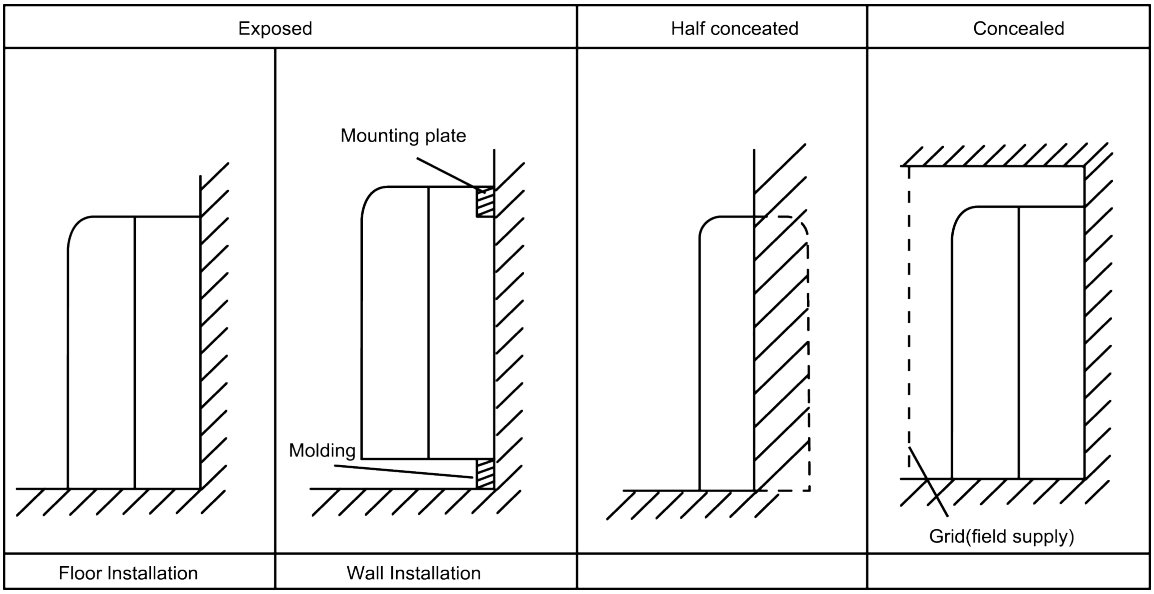

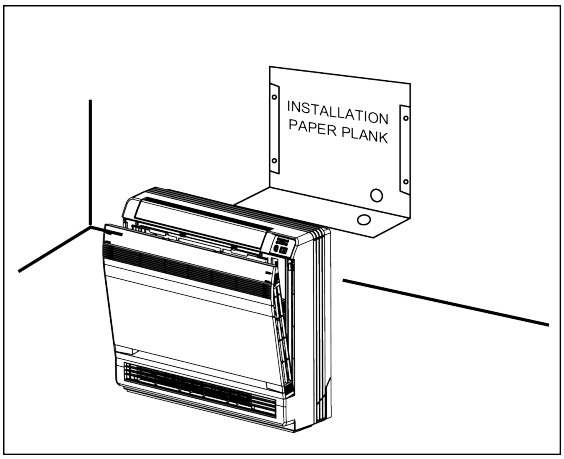

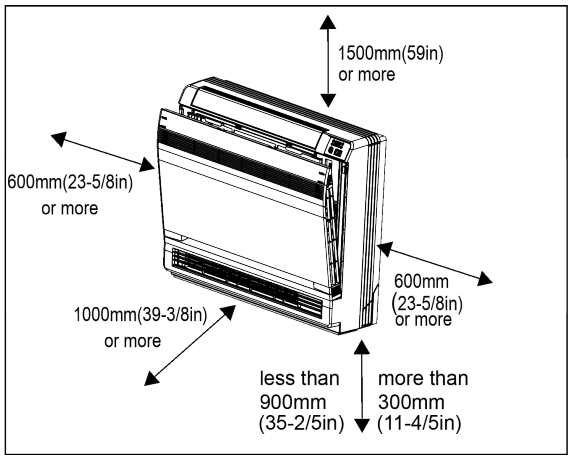

3.5.3 Installation Notice

(1) Installation dimension (refer to the outline dimension in the figure).

(2) Installation foundation.

Make sure building structure have sufficient strength to withstand the weight of unit.

(3) Installation site and environment.

1) Keep the unit from insolation and rainch

2) Keep the unit from fire, flammable objects, corrosive gap or exhaust gas.

3) Please reserve ventilation space.

4) Please reserve sufficient space for maintenance.

5) Please take proper measures to reduce noise and vibration.

(4) Electrical installation of unit.

All electrical installation must be done by professionals according to national and local laws and regulations.

The unit must be grounded reliably. Please connect wire according to the wiring diagram on the unit.

3.5.4 Electrical Installation of Unit

Live the sensor securing plate, remove the front metal plate cover, and connect the wire to the terminal board.

(1) Open the cover of electric box of indoor unit.

(2) Lead the communication line across the rubber ring.

(3) Connect the communication line to terminal D1 and D2 on the wiring board of indoor unit.

(4) Secure the communication line with the wire clamp on the electric box. Pull wires to make sure that they are securely latches up, and then retain wires with wire retainer.

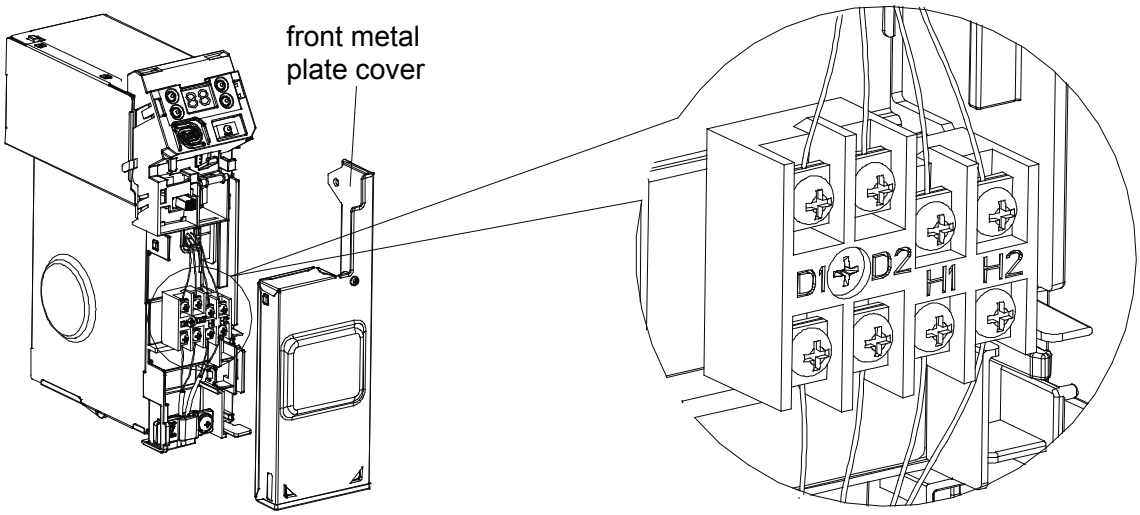

⚠ WARNING	
①	The power of every indoor unit should be unity power supply.
②	Do not use tapped wires, stranded wires, extension cords, or starburst connections, as they may cause overheating, electrical shock, or fire.
③	Do not use locally purchased electrical parts inside the product. (Do not branch the power for the drain pump, etc., from the terminal block.) Doing so may cause electric shock or fire.)

(5) The power connection cords have been inserted on the mainboard through the piping hole of the chassis. Please connect the power connection cord with the breaker. If the power cord is not long enough, please prolong it with terminal block.

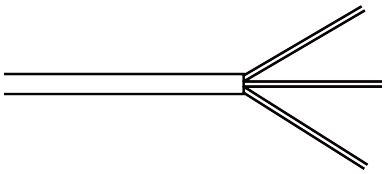

(6) Reinstall the wiring cover on the original place and tighten the bolt;

(7) Recover the surface panel.

3.5.5 Selection of Air Switch

Mode	Power Supply Specification	Circuit Breaker Capacity/A
GMV-ND07C/A-T(U)	208-230V~60Hz	6
GMV-ND09C/A-T(U)	208-230V~60Hz	6
GMV-ND12C/A-T(U)	208-230V~60Hz	6
GMV-ND18C/A-T(U)	208-230V~60Hz	6

3.6 Installation of High Static Pressure Duct Type Indoor Unit

3.6.1 Outline and Installation Dimension

The following diagram is applicable for units with the cooling capacity ranging from 18 kBtu/h to 48 kBtu/h.

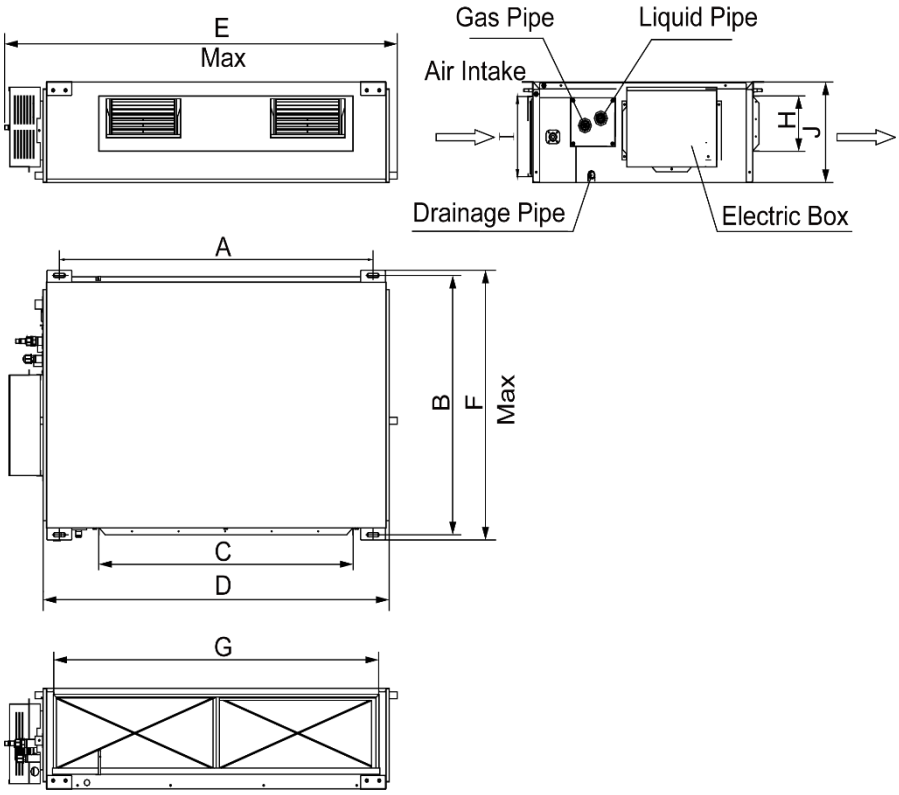

Below are dimensions of A, B, C, etc. for different models:

Unit: mm (inch)

Model	A	B	C	D	E	F	G	H	I	J
GMV-ND18PHS/A-T(U)	1101 (43-3/8)	517 (20-3/8)	820 (32-1/4)	1159 (45-5/8)	1271 (50)	558 (22)	1002 (39-1/2)	160 (6-1/4)	235 (9-1/4)	268 (10-1/2)
GMV-ND24PHS/A-T(U)										
GMV-ND30PHS/A-T(U)	1011 (39-3/4)	748 (29-1/2)	820 (32-1/4)	1115 (43-7/8)	1229 (48-3/8)	775 (30-1/2)	979 (38-1/2)	160 (6-1/4)	231 (9-1/8)	290 (11-3/8)
GMV-ND36PHS/A-T(U)										
GMV-ND42PHS/A-T(U)										
GMV-ND48PHS/A-T(U)										

The following diagram is applicable for units with the cooling capacity 72/96 kBtu/h.

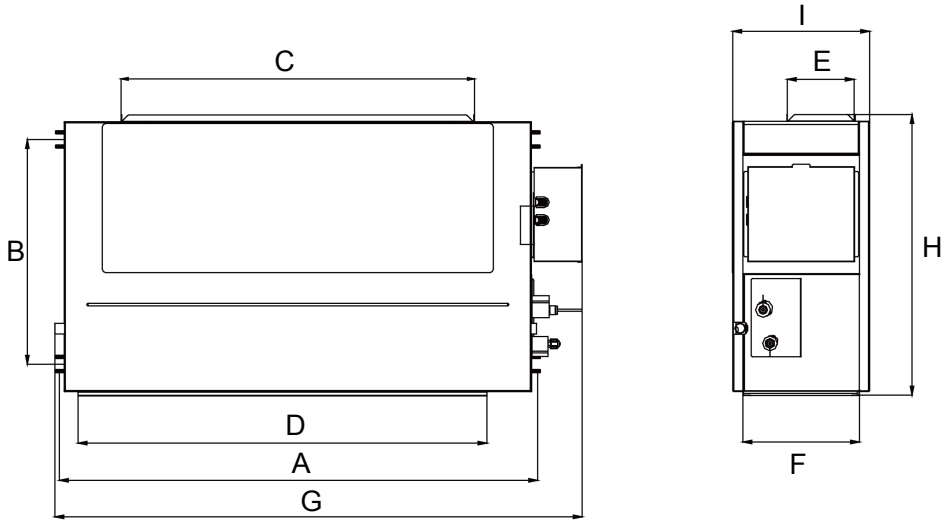

Below are dimensions of A, B, C, etc. for different models:

Unit: mm (inch)

Model	A	B	C	D	E	F	G	H	I
GMV-ND72PH/A-T(U)	1353 (53-1/4)	632 (24-7/8)	992 (39)	1150 (45-1/4)	192 (7-1/2)	327 (12-7/8)	1483 (58-3/8)	791 (31-1/8)	385 (15-3/16)
GMV-ND96PH/A-T(U)	1563 (61-1/8)	706 (27-3/4)	992 (39)	1350 (53-1/8)	192 (7-1/2)	402 (15-7/8)	1686 (66-3/8)	870 (34-1/4)	450 (17-3/4)

3.6.2 Installation Space

Model:GMV-ND18PHS/A-T(U) ~ GMV-ND48PHS/A-T(U)

Unit: mm(inch)

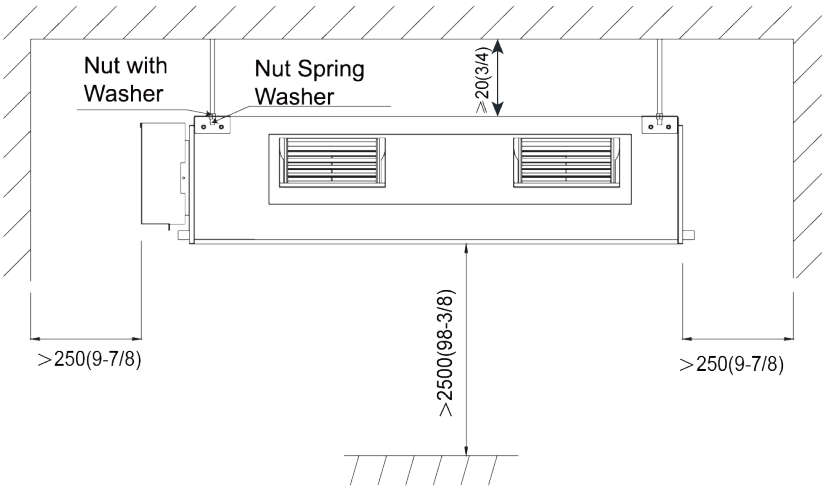

Model:GMV-ND72PH/A-T(U) / GMV-ND96PH/A-T(U)

Unit: mm (inch)

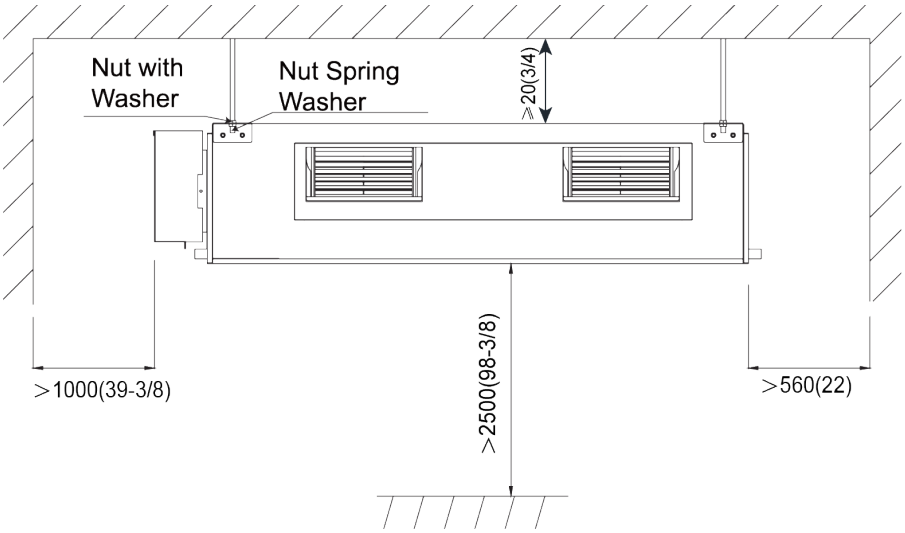

3.6.3 Installation Notice

- The unit shall be installed by the professional personnel according to this installation instruction to ensure proper use.
- Please contact the local Gree appointed service center before installation. Any malfunction caused by the unit that is not installed by the Gree appointed service center would probably not be dealt with on time because of the inconvenience of the business contact.
- It should be guided under the professional personnel when the air conditioner unit is moved to other place.
- Installation of the unit must be in accordance with National Electric Codes and local regulations.
- Improper installation will affect unit's performance, so do not install the unit by yourself. Please contact local dealer to arrange professional technicians for the installation.
- Do not connect power until all installation work is finished.
- If the supply cord is damaged, it must be replaced by the manufacturer or its service agent or a similarly qualified person in order to avoid a hazard.

3.6.4 Selection of Air Switch and Power Cord

Model	Power Cord Size	Air Switch apacity (A)	Minimum Sectional Area of Ground Wire (mm^2/AWG)	Minimum Sectional Area of Power Cord (mm^2/AWG)
GMV-ND18PHS/A-T(U)	208/230V/60Hz	15	1.0/AWG18	1.0/AWG18
GMV-ND24PHS/A-T(U)	208/230V/60Hz	15	1.0/AWG18	1.0/AWG18
GMV-ND30PHS/A-T(U)	208/230V/60Hz	15	1.0/AWG18	1.0/AWG18
GMV-ND36PHS/A-T(U)	208/230V/60Hz	15	1.0/AWG18	1.0/AWG18
GMV-ND42PHS/A-T(U)	208/230V/60Hz	15	1.0/AWG18	1.0/AWG18
GMV-ND48PHS/A-T(U)	208/230V/60Hz	15	1.0/AWG18	1.0/AWG18
GMV-ND72PH/A-T(U)	208/230V/60Hz	15	1.0/AWG18	1.0/AWG18
GMV-ND96PH/A-T(U)	208/230V/60Hz	15	1.5/AWG18	1.5/AWG18

3.7 Installation of Two-way Cassette Type Indoor Unit

3.7.1 Outline and Installation Dimension

GMV-ND**TS/A-T(U)

Unit: mm (inch)

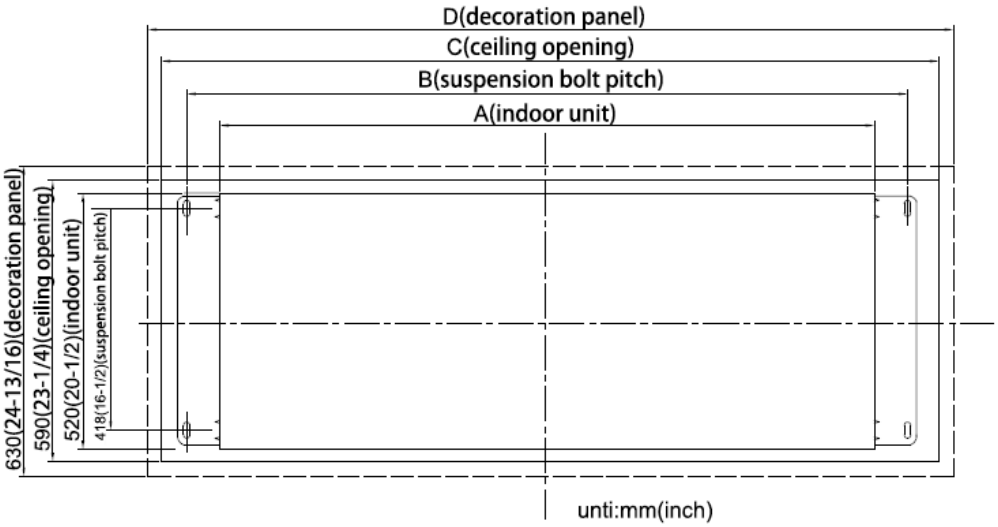

Unit: mm (inch)

Model	Indoor unit(A)	Suspension bolt pitch(B)	Ceiling opening(C)	Decoration panel(D)
GMV-ND09TS/A-T(U)	1200(47-1/4)	1252(49-5/16)	1403(55-1/4)	1443(56-13/16)
GMV-ND12TS/A-T(U) GMV-ND15TS/A-T(U)	1200(47-1/4)	1252(49-5/16)	1403(55-1/4)	1443(56-13/16)
GMV-ND18TS/A-T(U) GMV-ND24TS/A-T(U)	1200(47-1/4)	1252(49-5/16)	1403(55-1/4)	1443(56-13/16)

GMV-ND**TS/B-T(U)

Unit: mm(inch)

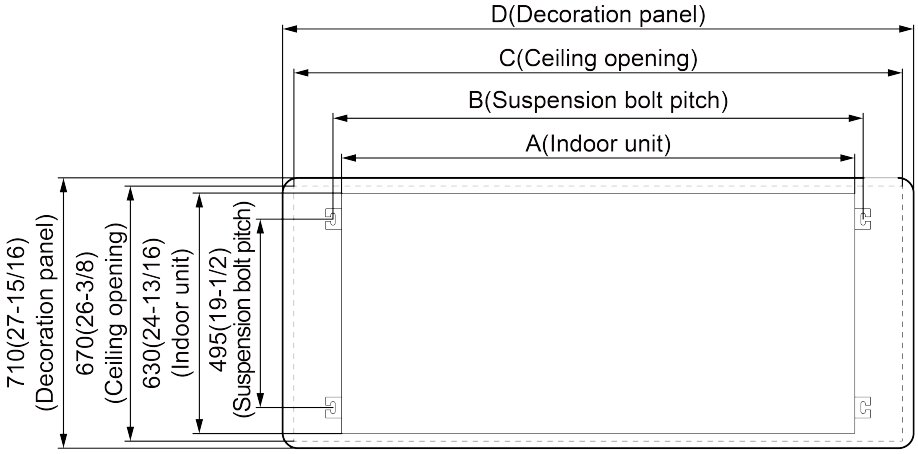

Unit: mm(inch)

Model	Indoor unit(A)	Suspension bolt pitch(B)	Ceiling opening(C)	Decoration panel(D)
GMV-ND09TS/B-T(U)	790(31-1/8)	834(32-7/8)	990(39)	1100(43-1/4)
GMV-ND12TS/B-T(U) GMV-ND15TS/B-T(U)	790(31-1/8)	834(32-7/8)	990(39)	1100(43-1/4)

Model	Indoor unit(A)	Suspension bolt pitch(B)	Ceiling opening(C)	Decoration panel(D)
GMV-ND18TS/B-T(U) GMV-ND24TS/B-T(U)	790(31-1/8)	834(32-7/8)	990(39)	1100(43-1/4)

3.7.2 Installation Space

GMV-ND**TS/A-T(U)

Unit: mm (inch)

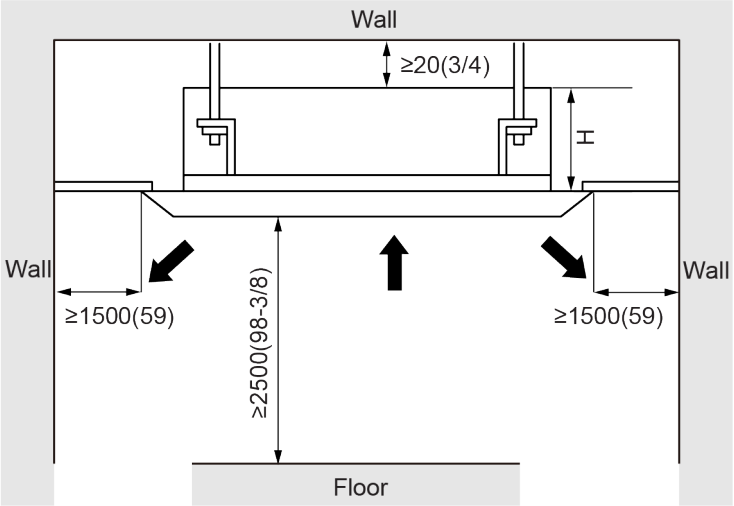

GMV-ND**TS/B-T(U)

Unit: mm(inch)

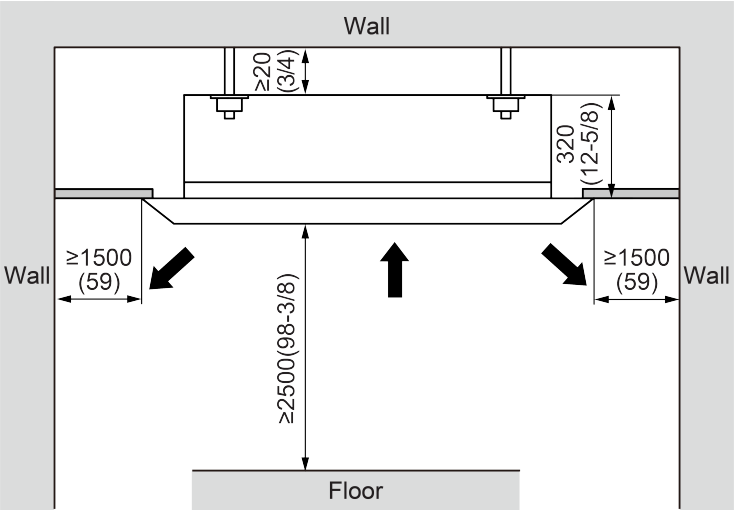

3.7.3 Installation Notice

- The unit shall be installed by the professional personnel according to this installation instruction to ensure proper use.
- Please contact the local Gree appointed service center before installation. Any malfunction caused by the unit that is not installed by the Gree appointed service center would probably not be dealt with on time because of the inconvenience of the business contact.
- It should be guided under the professional personnel when the air conditioner unit is moved to other place.
- The unit shall be installed in accordance with national standards or local regulations.
- Only qualified personnel can carry out installation work, please contact with local dealer before installation.
- Make sure all the installation work completed before energizing.

3.7.4 Selection of Air Switch and Power Cord

GMV-ND**TS/A-T(U)

Model	Power Cord Size	Air Switch apacity (A)	Minimum Sectional Area of Ground Wire (mm²/AWG)	Minimum Sectional Area of Power Cord (mm²/AWG)
GMV-ND09TS/A-T(U)	208/230V/60Hz	15	1.0/AWG18	1.0/AWG18
GMV-ND12TS/A-T(U)	208/230V/60Hz	15	1.0/AWG18	1.0/AWG18
GMV-ND15TS/A-T(U)	208/230V/60Hz	15	1.0/AWG18	1.0/AWG18
GMV-ND18TS/A-T(U)	208/230V/60Hz	15	1.0/AWG18	1.0/AWG18
GMV-ND24TS/A-T(U)	208/230V/60Hz	15	1.0/AWG18	1.0/AWG18

GMV-ND**TS/B-T(U)

Model	Power Cord Size	Air Switch apacity (A)	Minimum Sectional Area of Ground Wire (mm²/AWG)	Minimum Sectional Area of Power Cord (mm²/AWG)
GMV-ND09TS/B-T(U)	208/230V/60Hz	15	1.0/AWG18	1.0/AWG18
GMV-ND12TS/B-T(U)	208/230V/60Hz	15	1.0/AWG18	1.0/AWG18
GMV-ND15TS/B-T(U)	208/230V/60Hz	15	1.0/AWG18	1.0/AWG18
GMV-ND18TS/B-T(U)	208/230V/60Hz	15	1.0/AWG18	1.0/AWG18
GMV-ND24TS/B-T(U)	208/230V/60Hz	15	1.0/AWG18	1.0/AWG18

3.8 Installation of Floor Ceiling Type Indoor Unit

3.8.1 Outline and Installation Dimension

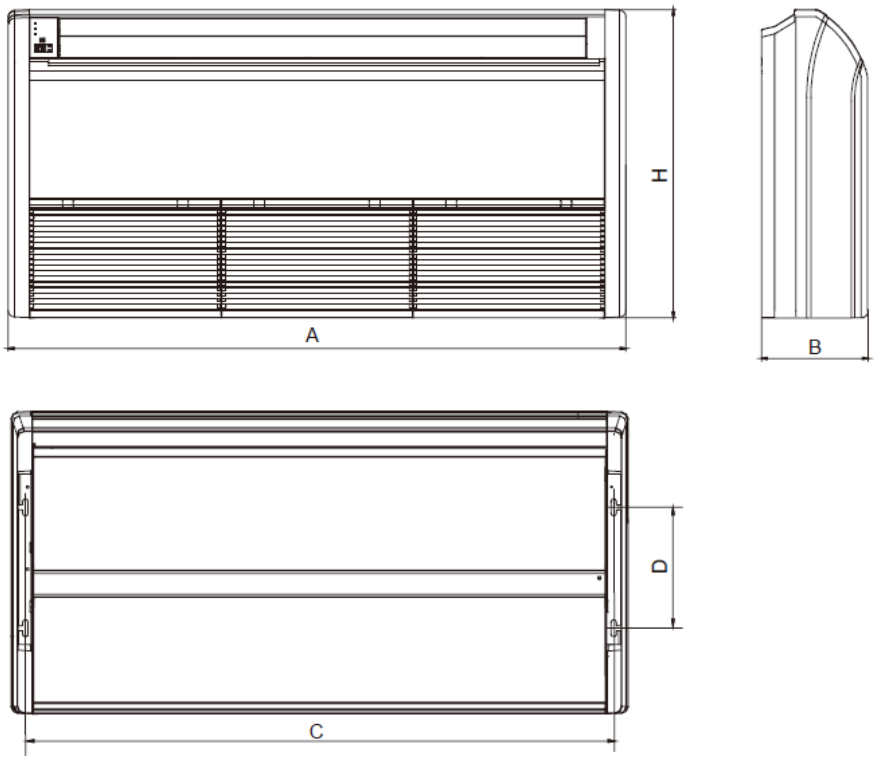

Below are dimensions of A, B, C, etc. for different models:

Unit: mm(inch)

Models	A	B	C	D	H
GMV-ND09ZD/A-T(U) GMV-ND12ZD/A-T(U) GMV-ND18ZD/A-T(U)	1220 (48)	225 (8-7/8)	1158 (45-5/8)	280 (11)	700 (27-9/16)
GMV-ND24ZD/A-T(U) GMV-ND30ZD/A-T(U)	1420 (56)	245 (9-5/8)	1354 (53-5/16)	280 (11)	700 (27-9/16)
GMV-ND36ZD/A-T(U) GMV-ND42ZD/A-T(U) GMV-ND48ZD/A-T(U)	1700 (66-15/16)	245 (9-5/8)	1634 (64-5/16)	280 (11)	700 (27-9/16)

3.8.2 Installation Space

Floor type

Unit: mm(inch)

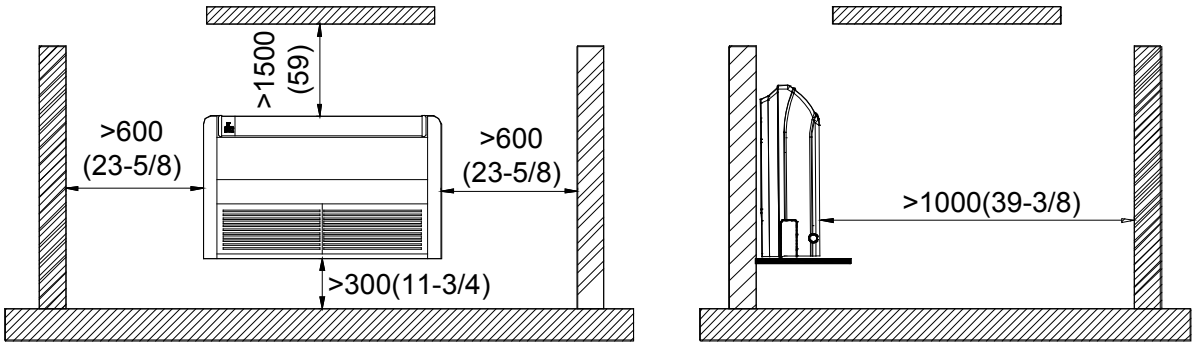

Ceiling type

Unit: mm(inch)

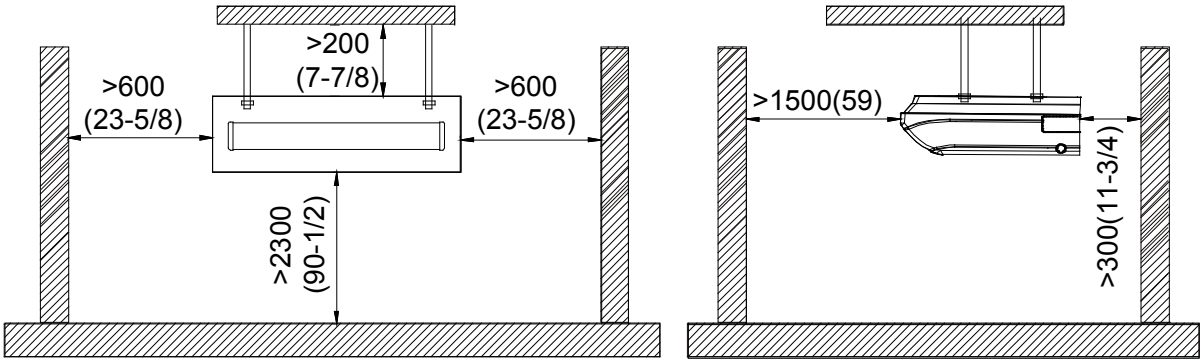

3.8.3 Installation Notice

- The unit shall be installed by the professional personnel according to this installation instruction to ensure proper use.
- Please contact the local Gree appointed service center before installation. Any malfunction caused by the unit that is not installed by the Gree appointed service center would probably not be dealt with on time because of the inconvenience of the business contact.
- It should be guided under the professional personnel when the air conditioner unit is moved to other place.
- The unit shall be installed in accordance with national standards or local regulations.
- Only qualified personnel can carry out installation work, please contact with local dealer before installation.
- Make sure all the installation work completed before energizing.

3.8.4 Selection of Air Switch and Power Cord

Model	Power Cord Size	Air Switch apacity (A)	Minimum Sectional Area of Ground Wire (mm²/AWG)	Minimum Sectional Area of Power Cord (mm²/AWG)
GMV-ND09ZD/A-T(U)	208/230V/60Hz	15	1.0/AWG18	1.0/AWG18
GMV-ND12ZD/A-T(U)	208/230V/60Hz	15	1.0/AWG18	1.0/AWG18
GMV-ND18ZD/A-T(U)	208/230V/60Hz	15	1.0/AWG18	1.0/AWG18
GMV-ND24ZD/A-T(U)	208/230V/60Hz	15	1.0/AWG18	1.0/AWG18
GMV-ND30ZD/A-T(U)	208/230V/60Hz	15	1.0/AWG18	1.0/AWG18
GMV-ND36ZD/A-T(U)	208/230V/60Hz	15	1.0/AWG18	1.0/AWG18
GMV-ND42ZD/A-T(U)	208/230V/60Hz	15	1.0/AWG18	1.0/AWG18
GMV-ND48ZD/A-T(U)	208/230V/60Hz	15	1.0/AWG18	1.0/AWG18

3.9 Installation of Fresh Air Processing Indoor Unit

3.9.1 Outline and Installation Dimension

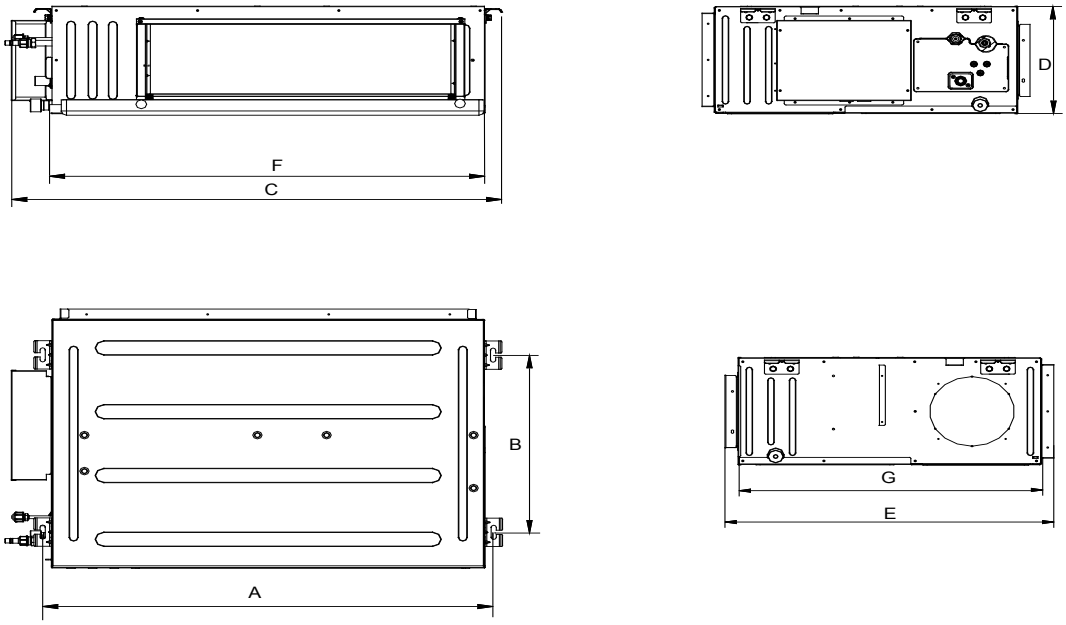

The table below lists the detailed dimensions.

Unit: mm(inch)

Model	A	B	C	D	E	F	G
GMV-NDX42P/A-T(U)	1440 (56-11/16)	500 (19-11/16)	1580 (62-7/32)	300 (11-13/16)	754 (29-11/16)	1400 (55-1/8)	700 (27-9/16)
GMV-NDX48P/A-T(U)	1440 (56-11/16)	500 (19-11/16)	1580 (62-7/32)	300 (11-13/16)	754 (29-11/16)	1400 (55-1/8)	700 (27-9/16)

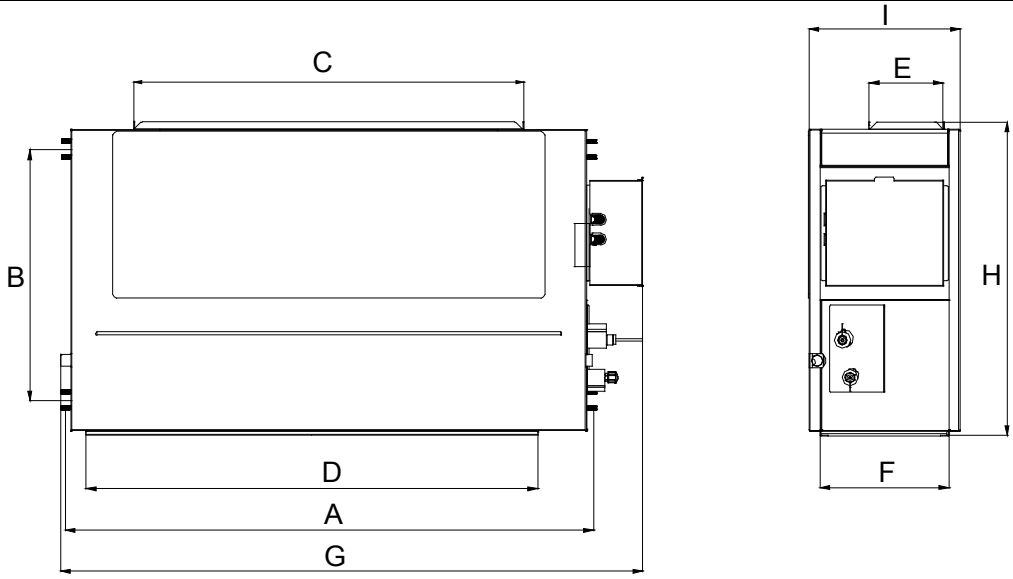

The table below lists the detailed dimensions.

Unit: mm(inch)

Model \ Item	A	B	C	D	E	F	G	H	I
GMV-NDX54P/A-T(U)	1353 (53-1/4)	632 (24-7/8)	992 (39)	1150 (45-1/4)	192 (7-1/2)	327 (12-7/8)	1483 (58-3/8)	791 (31-1/8)	385 (15-3/16)
GMV-NDX72P/A-T(U)	1353 (53-1/4)	632 (24-7/8)	992 (39)	1150 (45-1/4)	192 (7-1/2)	327 (12-7/8)	1483 (58-3/8)	791 (31-1/8)	385 (15-3/16)
GMV-NDX96P/A-T(U)	1353 (53-1/4)	632 (24-7/8)	992 (39)	1150 (45-1/4)	192 (7-1/2)	327 (12-7/8)	1483 (58-3/8)	791 (31-1/8)	385 (15-3/16)

3.9.2 Installation Space

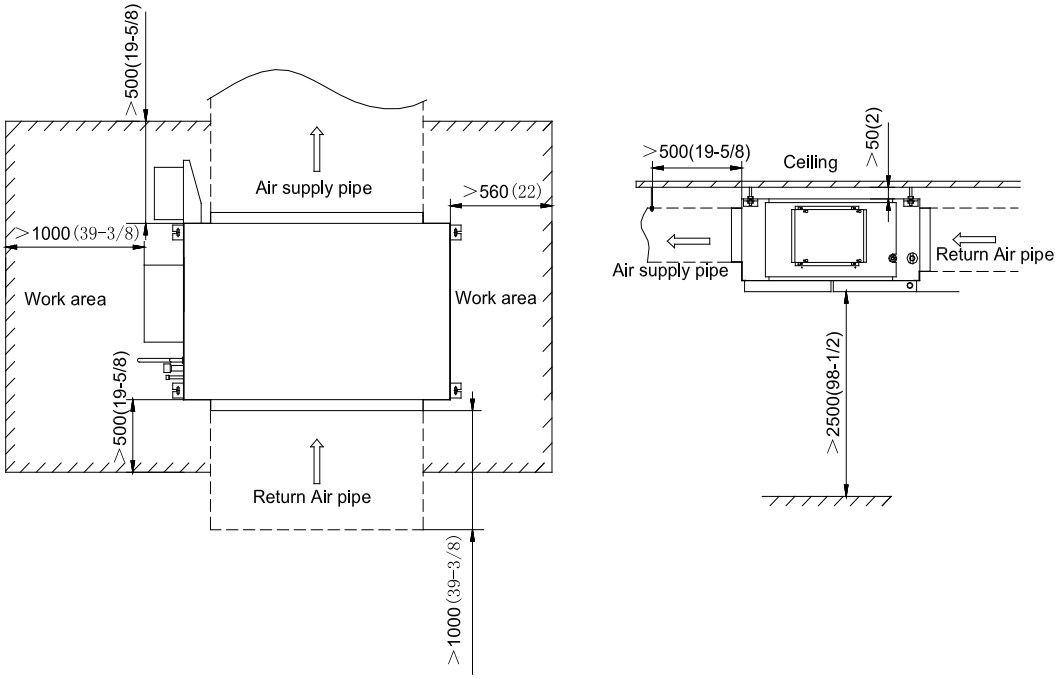

NOTICE!

① Installation of the unit must be in accordance with National Electric Codes and local safety regulations.

② Improper installation will affect unit's performance, so do not install the unit by yourself. Please contact local dealer to arrange professional technicians for the installation.

③ Do not connect power until all installation work is finished.

3.9.3 Installation Notice

- The unit shall be installed by the professional personnel according to this installation instruction to ensure proper use.
- Please contact the local Gree appointed service center before installation. Any malfunction caused by the unit that is not installed by the Gree appointed service center would probably not be dealt with on time because of the inconvenience of the business contact.
- It should be guided under the professional personnel when the air conditioner unit is moved to other place.

3.9.4 Selection of Air Switch and Power Cord

Model	Power Cord Size	Air Switch apacity (A)	Minimum Sectional Area of Ground Wire (mm²/AWG)	Minimum Sectional Area of Power Cord (mm²/AWG)
GMV-NDX42P/A-T(U)	208/230V/60Hz	15	1.0/AWG18	1.0/AWG18
GMV-NDX48P/A-T(U)	208/230V/60Hz	15	1.0/AWG18	1.0/AWG18
GMV-NDX54P/A-T(U)	208/230V/60Hz	15	1.0/AWG18	1.0/AWG18
GMV-NDX72P/A-T(U)	208/230V/60Hz	15	1.0/AWG18	1.0/AWG18
GMV-NDX96P/A-T(U)	208/230V/60Hz	15	1.0/AWG18	1.0/AWG18

3.10 Installation of Compact Four-way Cassette Type Indoor Unit

3.10.1 Outline and installation dimension

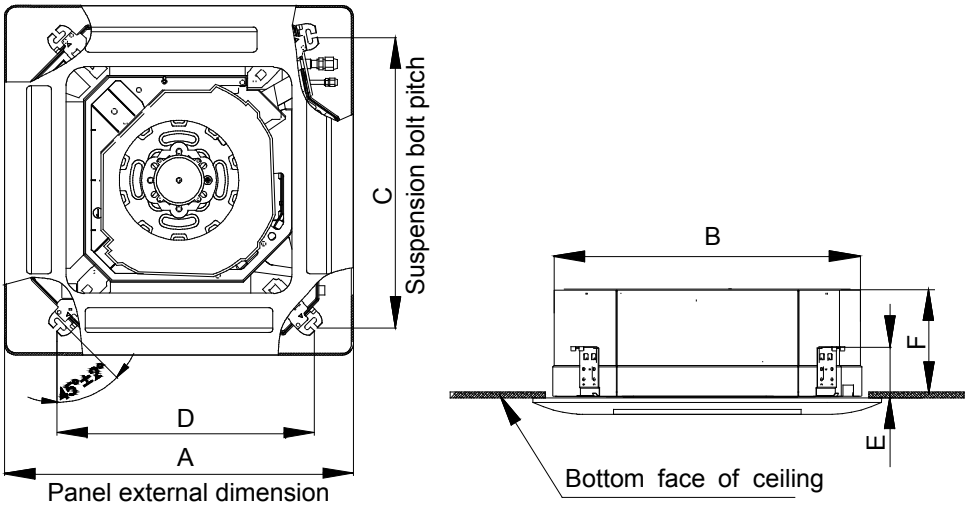

Unit: mm(inch)

Model	A	B	C	D	E	F
GMV-ND07T/B-T(U) GMV-ND09T/B-T(U) GMV-ND12T/B-T(U) GMV-ND15T/B-T(U) GMV-ND18T/B-T(U)	670 (26-3/8)	596 (23-1/2)	592 (23-5/16)	571 (22-1/2)	145 (5-11/16)	240 (9-1/2)

3.10.2 Installation space

Unit: mm(inch)

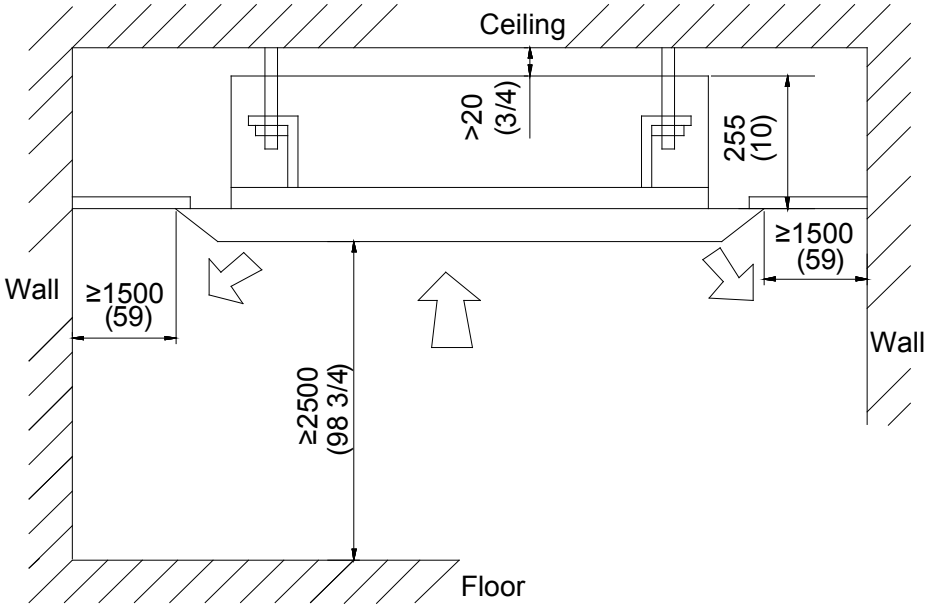

3.10.3 Installation notice

- The unit shall be installed by the professional personnel according to this installation instruction to ensure proper use.
- Please contact the local Gree appointed service center before installation. Any malfunction caused by the unit that is not installed by the Gree appointed service center would probably not be dealt with on time because of the inconvenience of the business contact.
- It should be guided under the professional personnel when the air conditioner unit is moved to other place.
- The unit shall be installed in accordance with national standards or local regulations.
- Only qualified personnel can carry out installation work, please contact with local dealer before installation.
- Make sure all the installation work completed before energizing.
- The appliances are not accessible to general public.

3.10.4 Selection of air switch and power cord

Model	Power Cord Size	Air Switch apacity (A)	Minimum Sectional Area of Ground Wire (AWG)	Minimum Sectional Area of Power Cord (AWG)
GMV-ND07T/B-T(U)	208/230V~,60Hz	15	AWG18	AWG18
GMV-ND09T/B-T(U)	208/230V~,60Hz	15	AWG18	AWG18
GMV-ND12T/B-T(U)	208/230V~,60Hz	15	AWG18	AWG18
GMV-ND15T/B-T(U)	208/230V~,60Hz	15	AWG18	AWG18
GMV-ND18T/B-T(U)	208/230V~,60Hz	15	AWG18	AWG18

3.11 Installation of Super High Static Pressure Duct Type Indoor Unit

3.11.1 Outline and Installation Dimension

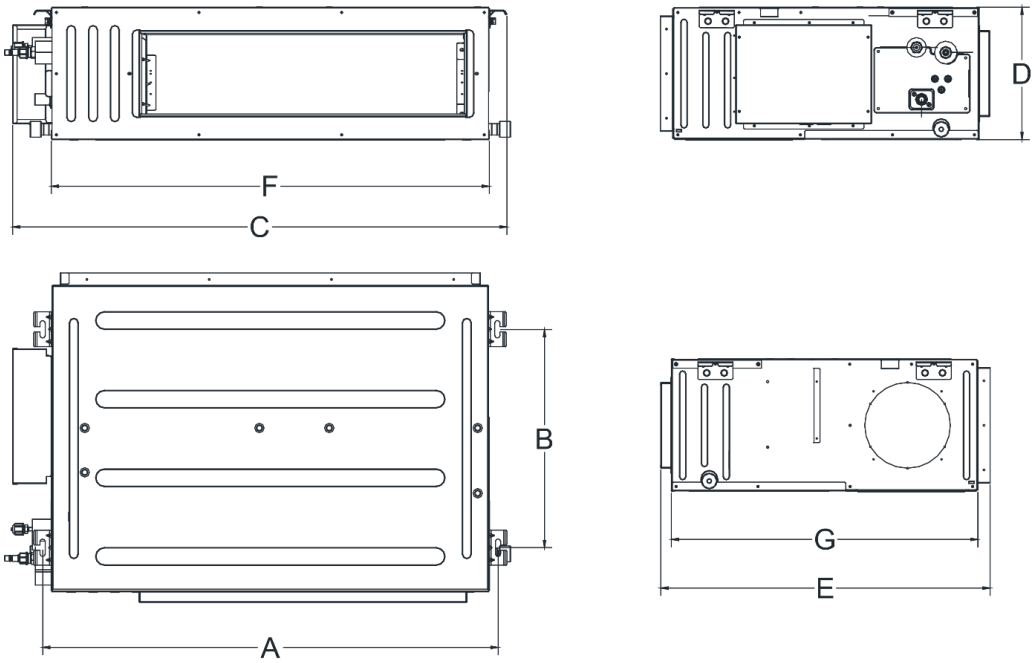

Below are dimensions of A, B, C, etc. for different models:

Unit: mm(inch)

Model	A	B	C	D	E	F	G
GMV-ND07~09PHS/B-T(U)	740 (29-1/8)	500 (19-11/16)	830 (32-11/16)	300 (11-13/16)	754 (29-11/16)	700 (27-9/16)	700 (27-9/16)
GMV-ND12~24PHS/B-T(U)	1040 (40-15/16)	500 (19-11/16)	1130 (44-31/64)	300 (11-13/16)	754 (29-11/16)	1000 (39-3/8)	700 (27-9/16)
GMV-ND30~42PHS/B-T(U)	1440 (56-11/16)	500 (19-11/16)	1530 (60-1/4)	300 (11-13/16)	754 (29-11/16)	1400 (55-1/8)	700 (27-9/16)
GMV-ND48~54PHS/B-T(U)	1440 (56-11/16)	500 (19-11/16)	1580 (62-7/32)	300 (11-13/16)	754 (29-11/16)	1400 (55-1/8)	700 (27-9/16)

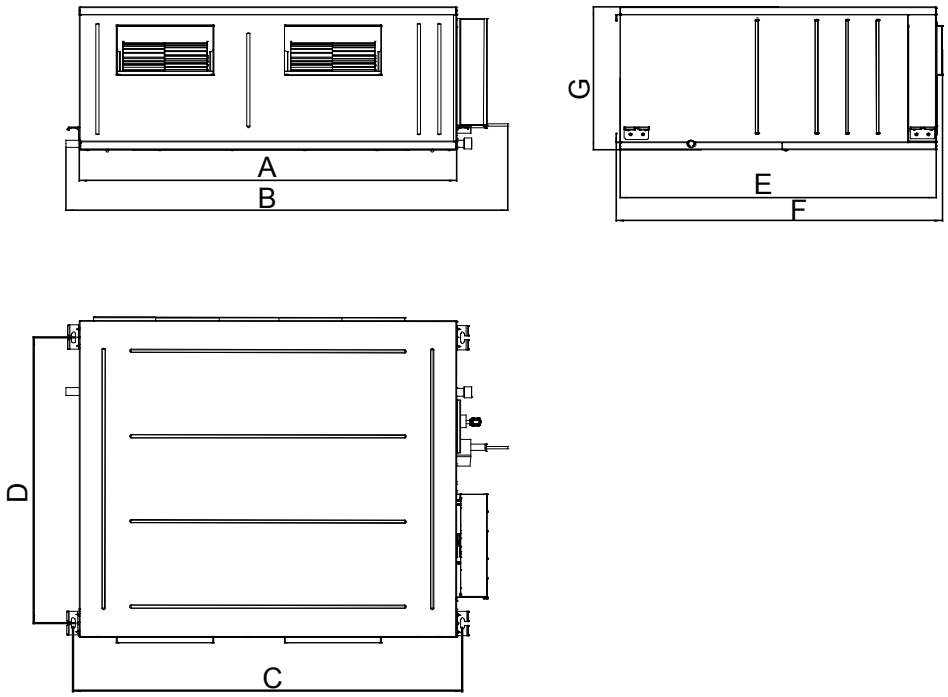

Below are dimensions of A, B, C, etc. for different models:

Unit: mm(inch)

Model	A	B	C	D	E	F	G
GMV-ND72~96PH/B-T(U)	1240 (48-3/4)	1452 (57-1/8)	1280 (50-3/8)	940 (38)	1040 (41)	1071 (42-1/8)	470 (18-1/2)

3.11.2 Installation space

Unit: mm(inch)

GMV-ND07 ~ 54PHS/B-T(U)

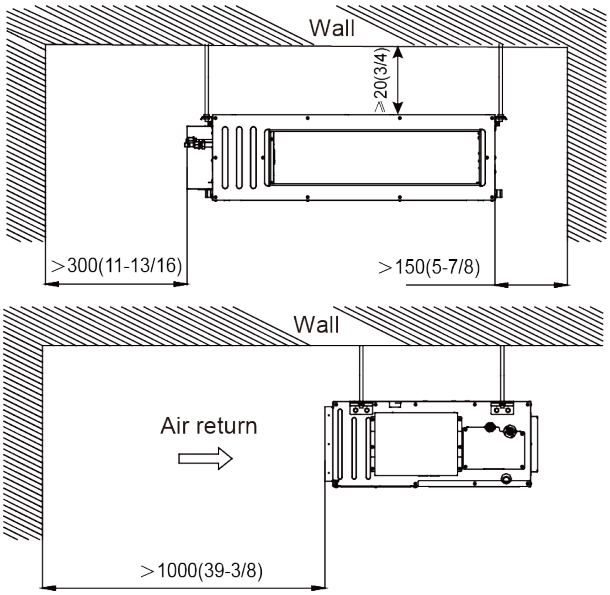

GMV-ND72 ~ 96PH/B-T(U)

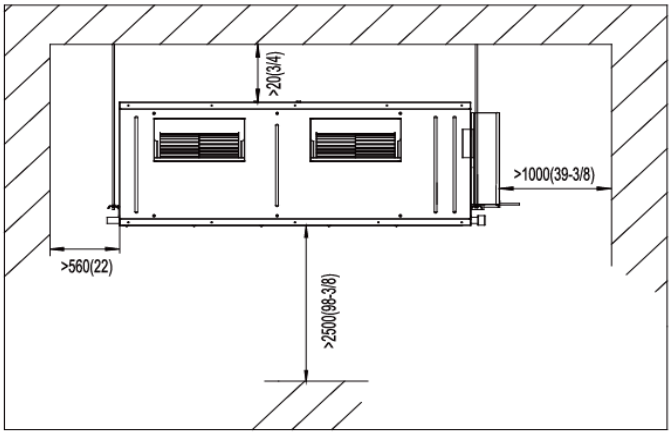

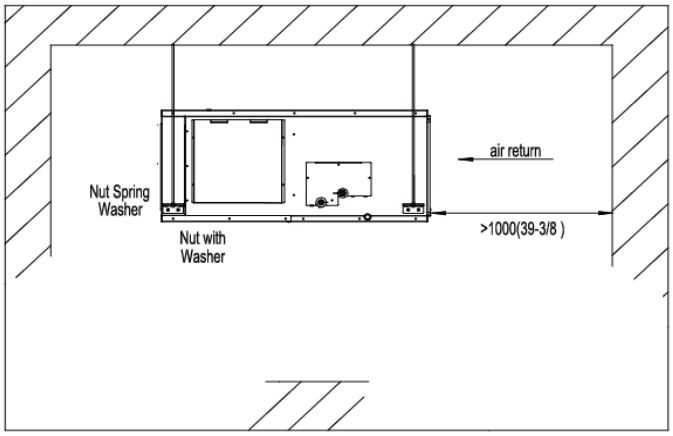

3.11.3 Installation notice

- The unit shall be installed by the professional personnel according to this installation instruction to ensure proper use.
- Please contact the local Gree appointed service center before installation. Any malfunction caused by the unit that is not installed by the Gree appointed service center would probably not be dealt with on time because of the inconvenience of the business contact.
- It should be guided under the professional personnel when the air conditioner unit is moved to other place.
- Installation of the unit must be in accordance with National Electric Codes and local regulations.
- Improper installation will affect unit's performance, so do not install the unit by yourself. Please contact local dealer to arrange professional technicians for the installation.
- Do not connect power until all installation work is finished.
- If the supply cord is damaged, it must be replaced by the manufacturer or its service agent or a similarly qualified person in order to avoid a hazard.

3.11.4 Selection of air switch and power cord

Model	Power Cord Size	Air Switch apacity (A)	Minimum Sectional Area of Ground Wire (mm^2/AWG)	Minimum Sectional Area of Power Cord (mm^2/AWG)
GMV-ND07PHS/B-T(U)	208-230V~60Hz	15	1.0/AWG18	1.0/AWG18
GMV-ND09PHS/B-T(U)	208-230V~60Hz	15	1.0/AWG18	1.0/AWG18
GMV-ND12PHS/B-T(U)	208-230V~60Hz	15	1.0/AWG18	1.0/AWG18
GMV-ND15PHS/B-T(U)	208-230V~60Hz	15	1.0/AWG18	1.0/AWG18
GMV-ND18PHS/B-T(U)	208-230V~60Hz	15	1.0/AWG18	1.0/AWG18
GMV-ND22PHS/B-T(U)	208-230V~60Hz	15	1.0/AWG18	1.0/AWG18
GMV-ND24PHS/B-T(U)	208-230V~60Hz	15	1.0/AWG18	1.0/AWG18
GMV-ND30PHS/B-T(U)	208-230V~60Hz	15	1.0/AWG18	1.0/AWG18
GMV-ND36PHS/B-T(U)	208-230V~60Hz	15	1.0/AWG18	1.0/AWG18
GMV-ND42PHS/B-T(U)	208-230V~60Hz	15	1.0/AWG18	1.0/AWG18
GMV-ND48PHS/B-T(U)	208-230V~60Hz	15	1.0/AWG18	1.0/AWG18
GMV-ND54PHS/B-T(U)	208-230V~60Hz	15	1.0/AWG18	1.0/AWG18
GMV-ND72PH/B-T(U)	208-230V~60Hz	15	1.0/AWG18	1.0/AWG18
GMV-ND96PH/B-T(U)	208-230V~60Hz	15	1.0/AWG18	1.0/AWG18

3.12 Installation of Air Handler type Indoor Unit

3.12.1 Outline and installation dimension

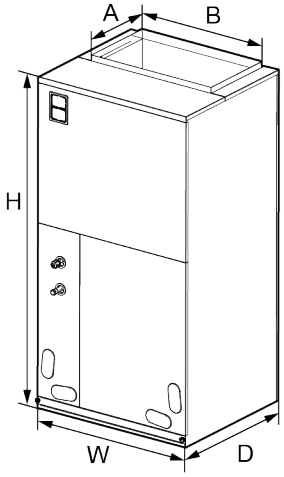

Unit: mm(inch)

GMV-ND**A/A-T(U):

MODEL	DIMENSION				
	W	D	H	A	B
GMV-ND09A/A-T(U)	460(18-1/8)	540(21-1/4)	1105(43-1/2)	295(11-5/8)	426(16-3/4)
GMV-ND12A/A-T(U)	460(18-1/8)	540(21-1/4)	1105(43-1/2)	295(11-5/8)	426(16-3/4)
GMV-ND18A/A-T(U)	460(18-1/8)	540(21-1/4)	1105(43-1/2)	295(11-5/8)	426(16-3/4)
GMV-ND24A/A-T(U)	460(18-1/8)	540(21-1/4)	1105(43-1/2)	295(11-5/8)	426(16-3/4)
GMV-ND30A/A-T(U)	460(18-1/8)	540(21-1/4)	1105(43-1/2)	295(11-5/8)	426(16-3/4)

MODEL	DIMENSION				
	W	D	H	A	B
GMV-ND36A/A-T(U)	540(21-1/4)	540(21-1/4)	1224(48-1/4)	295(11-5/8)	508(20)
GMV-ND42A/A-T(U)	540(21-1/4)	540(21-1/4)	1224(48-1/4)	295(11-5/8)	508(20)
GMV-ND48A/A-T(U)	630(24-7/8)	540(21-1/4)	1224(48-1/4)	295(11-5/8)	508(20)
GMV-ND54A/A-T(U)	630(24-7/8)	540(21-1/4)	1224(48-1/4)	295(11-5/8)	508(20)

Unit: mm(inch)

GMV-ND**A/B-T(U):

MODEL	DIMENSION				
	W	D	H	A	B
GMV-ND09A/B-T(U)	460(18-1/8)	540(21-1/4)	1105(43-1/2)	295(11-5/8)	426(16-3/4)
GMV-ND12A/B-T(U)	460(18-1/8)	540(21-1/4)	1105(43-1/2)	295(11-5/8)	426(16-3/4)
GMV-ND18A/B-T(U)	460(18-1/8)	540(21-1/4)	1105(43-1/2)	295(11-5/8)	426(16-3/4)
GMV-ND24A/B-T(U)	460(18-1/8)	540(21-1/4)	1105(43-1/2)	295(11-5/8)	426(16-3/4)
GMV-ND30A/B-T(U)	460(18-1/8)	540(21-1/4)	1105(43-1/2)	295(11-5/8)	426(16-3/4)
GMV-ND36A/B-T(U)	540(21-1/4)	540(21-1/4)	1224(48-1/4)	295(11-5/8)	508(20)
GMV-ND42A/B-T(U)	540(21-1/4)	540(21-1/4)	1224(48-1/4)	295(11-5/8)	508(20)
GMV-ND48A/B-T(U)	630(24-3/4)	540(21-1/4)	1448 (57)	295(11-5/8)	508(20)
GMV-ND54A/B-T(U)	630(24-3/4)	540(21-1/4)	1448 (57)	295(11-5/8)	508(20)
GMV-ND60A/B-T(U)	630(24-3/4)	540(21-1/4)	1448 (57)	295(11-5/8)	508(20)

3.12.2 Installation notice

When installing the air handler, take consideration to minimize the length of refrigerant tubing as much as possible. Do not install the air handler in a location either above or below the condenser that violates the instructions provided with the condenser. Service clearance is to take precedence. Allow a minimum of 24” in front of the unit for service clearance. When installing in an area directly over a finished ceiling (such as an attic), an emergency drain pan is required directly under the unit. See local and state codes for requirements. When installing this unit in an area that may become wet, elevate the unit with a sturdy, non-porous material. In installations that may lead to physical damage (i.e. a garage) it is advised to install a protective barrier to prevent such damage.

This air handler is designed for a complete supply and return ductwork system. These duct type indoor units are used to supply conditioned air to one zone.Do not operate this product without all ductwork attached.

Based upon the actual conditions, if air handler is installed as type (A), the air handler should be concealed in a specific room or space and make sure the air handler is not accessible to the general public.

Based upon the actual conditions, if air handler is installed as type (B), make sure that there is enough space for care and maintenance and the height between the air handler and ground is above 2500mm. And the air handler is not accessible to the general public.

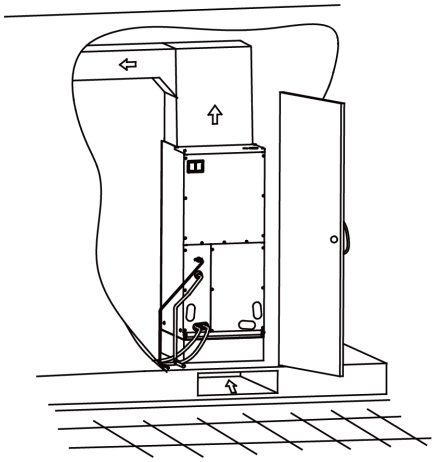

Type (A)

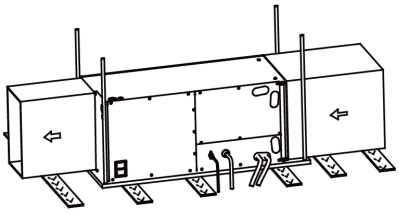

Type (B)

3.12.3 Selection of air switch and power cord

GMV-ND**A/A-T(U)：

Model	Power Supply	Circuit Breaker Capacity (A)	Minimum Sectional Area of Ground Wire (mm^2/AWG)	Minimum Sectional Area of Power Cord (mm^2/AWG)
GMV-ND09A/A-T(U)	208/230V~60Hz	15	1.0/AWG18	1.0/AWG18
GMV-ND12A/A-T(U)	208/230V~60Hz	15	1.0/AWG18	1.0/AWG18
GMV-ND18A/A-T(U)	208/230V~60Hz	15	1.0/AWG18	1.0/AWG18
GMV-ND24A/A-T(U)	208/230V~60Hz	15	1.0/AWG18	1.0/AWG18
GMV-ND30A/A-T(U)	208/230V~60Hz	15	1.0/AWG18	1.0/AWG18
GMV-ND36A/A-T(U)	208/230V~60Hz	15	1.0/AWG18	1.0/AWG18
GMV-ND42A/A-T(U)	208/230V~60Hz	15	1.0/AWG18	1.0/AWG18
GMV-ND48A/A-T(U)	208/230V~60Hz	15	1.0/AWG18	1.0/AWG18
GMV-ND54A/A-T(U)	208/230V~60Hz	15	1.0/AWG18	1.0/AWG18

GMV-ND**A/B-T(U)：

Model	Power Supply	Circuit Breaker Capacity (A)	Minimum Sectional Area of Ground Wire (mm^2/AWG)	Minimum Sectional Area of Power Cord (mm^2/AWG)
GMV-ND09A/B-T(U)	208/230V~60Hz	15	1.0/AWG18	1.0/AWG18
GMV-ND12A/B-T(U)	208/230V~60Hz	15	1.0/AWG18	1.0/AWG18
GMV-ND18A/B-T(U)	208/230V~60Hz	15	1.0/AWG18	1.0/AWG18
GMV-ND24A/B-T(U)	208/230V~60Hz	15	1.0/AWG18	1.0/AWG18
GMV-ND30A/B-T(U)	208/230V~60Hz	15	1.0/AWG18	1.0/AWG18
GMV-ND36A/B-T(U)	208/230V~60Hz	15	1.0/AWG18	1.0/AWG18
GMV-ND42A/B-T(U)	208/230V~60Hz	15	1.0/AWG18	1.0/AWG18
GMV-ND48A/B-T(U)	208/230V~60Hz	15	1.0/AWG18	1.0/AWG18
GMV-ND54A/B-T(U)	208/230V~60Hz	15	1.0/AWG18	1.0/AWG18

3.12.4 Electric heater

- The air handlers listed in this manual do not have factory installed electric heater. Electric heater is available as an accessory. Please refer to installation instructions provided with heater kit for the correct installation procedure.
- Refer to the “installing electric heater” section of this manual and the instructions provided with the heater kit for the correct installation procedure.

- The electrical characteristics of the air handler, the electric heater kit, and the supply power should be identical. This air handler does not have factory installed electric heater. Electric heater is available as an accessory. If installing this option, the only heater kits that can be used are the series as indicated below. It is forbidden to use the electric heater other than those recommended.
- E-HEAT mode setting method: under off status, press ON/OFF and Menu button for 5s to turn on or turn off E-heat mode. After that, the wired remote control pop-up box shows "Setting is done" for 1s, and indoor unit can set “Electric heating mode”. When E-HEAT mode has been set and indoor unit operates under heating mode, if outdoor unit stops operation because of error, indoor unit will switch to operate under electric heating mode.
- After the electric heater is shutdown, the fan of indoor unit will delay for a few minutes and then shut down so that the indoor unit can blow the waste heat and relieve the heat accumulation in the air duct.
- During installation and debugging, pay attention to verify the switch sequence of electric heater and fan, ensure the fan must be turned on when electric heater operation and ensure the electric heater is turned off before the fan to avoid unsafe.

3.12.4.1 Electric heater kits available

Model	Electric heater	Description	Manufacturer of electric heater
GMV-ND09A/B-T(U) GMV-ND12A/B-T(U) GMV-ND18A/B-T(U)	21-4227-00	Circuit breaker, 5 kW electric heater	TUTCO
GMV-ND24A/B-T(U) GMV-ND30A/B-T(U) GMV-ND36A/B-T(U)	21-4227-00 21-4216-00 21-4216-01	Circuit breaker, 5 kW、8 kW、10 kW electric heater	
GMV-ND42A/B-T(U) GMV-ND48A/B-T(U) GMV-ND54A/B-T(U) GMV-ND60A/B-T(U)	21-4227-00 21-4216-00 21-4216-01 21-4217-00	Circuit breaker, 5 kW、8 kW、10 kW、15 kW electric heater	

3.12.4.2 Electric heater kits installation

(1) Ensure that all power supply is disconnected prior to installing the heater kit.

(2) A means of strain relief and conductor protection must be provided at the supply wire entrance into cabinet.

(3) Use copper conductors only.

(4) Installation must follow national electric code and other applicable codes.

(5) If this appliance is installed in an enclosed area such as a garage or utility room with any carbon monoxide producing appliance, ensure the area is properly ventilated.

1) Refer to the Table for appropriate heater kit.

2) Check any physical damage, do not install damaged heater kit.

3) Remove the upper access panel from air handler.

4) Remove cover plate from air handler.

5) Slide the heater kit in to the slot and secure element plate with previously removed screws.

6) Insert power leads into the circuit breaker lugs or stripped red and black wires (for heater kit without circuit breaker) and tighten.
7) Connect ground wire to ground lug.
8) Knock off appropriate area of the plastic circuit breaker cover on the access panel of the air handler. Knock off the holes according to the actual installation number and positions of circuit breakers. If circuit breaker is not installed, do not knock off the holes; otherwise, electric shock may occur.
9) Replace access panel and check operation.

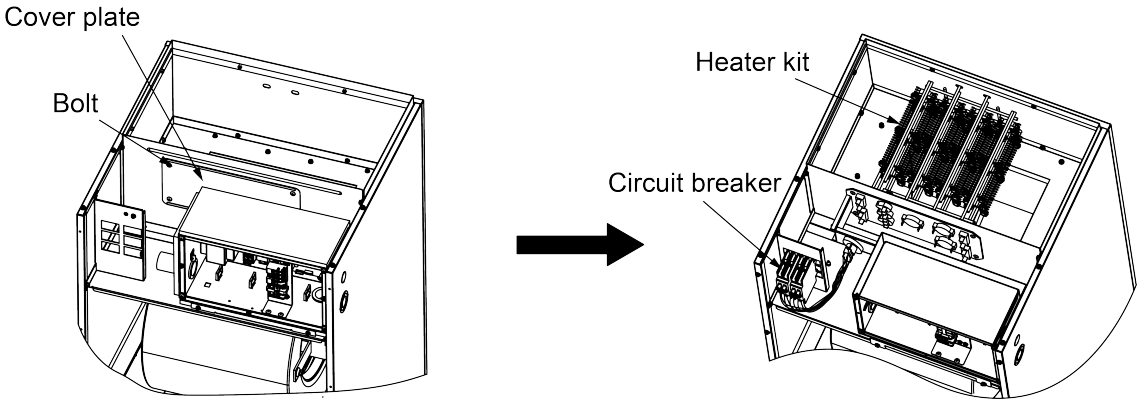

10) Connection of power cords and wired controller.

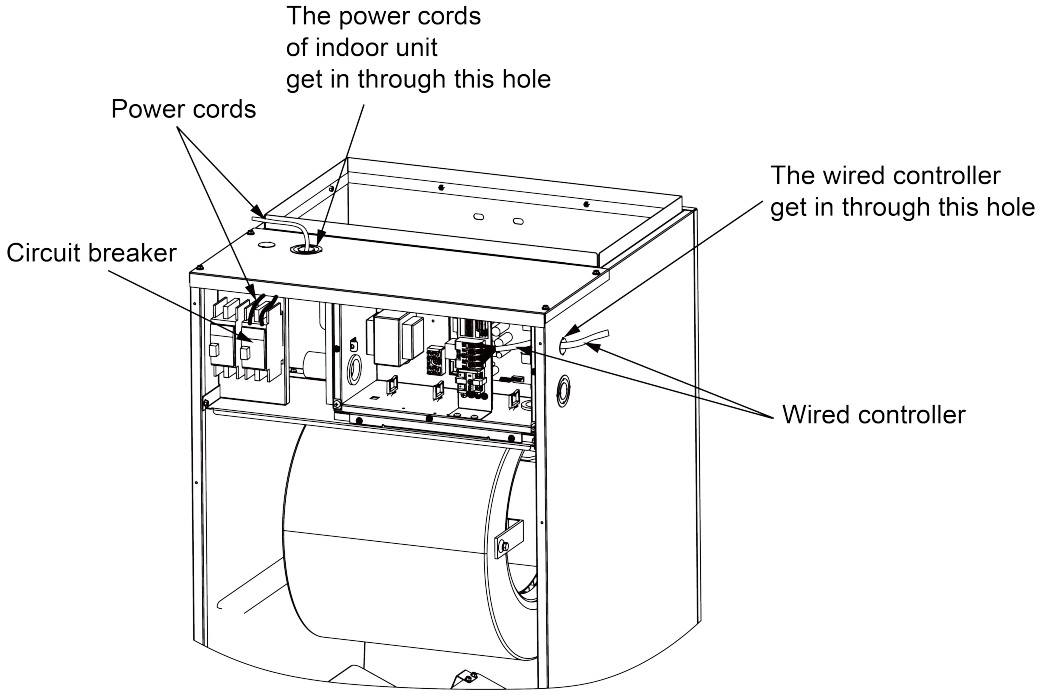

3.13 Installation of AHU-KIT

3.13.1 Outline and installation dimension

Size of control box for GMV-N12U/A-T(U) / GMV-N24U/A-T(U) / GMV-N48U/A-T(U) / GMV-N96U/A-T(U) and GMV-N192U/A-T(U):

Unit: mm(inch)

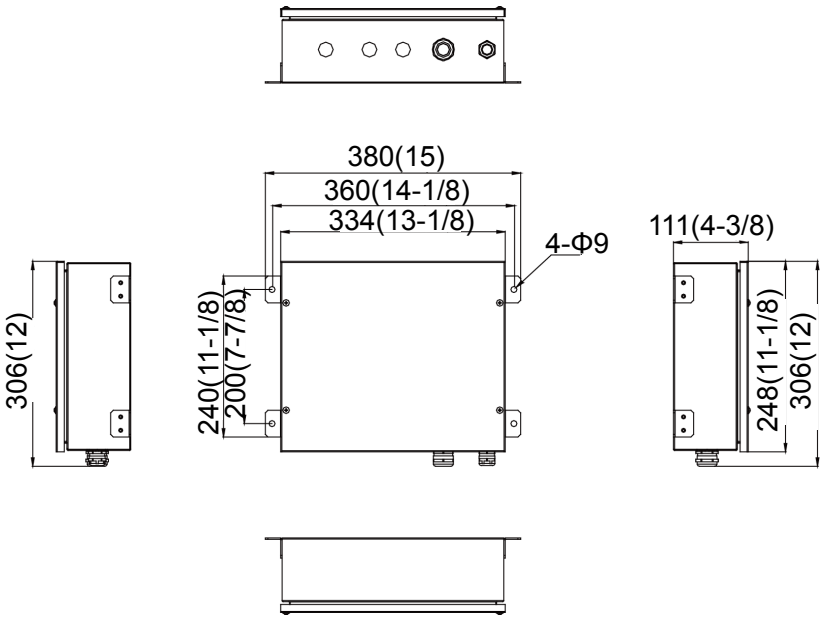

Size of EXV box for GMV-N12U/A-T(U) / GMV-N24U/A-T(U) / GMV-N48U/A-T(U) / GMV-N96U/A-T(U):

Unit: mm(inch)

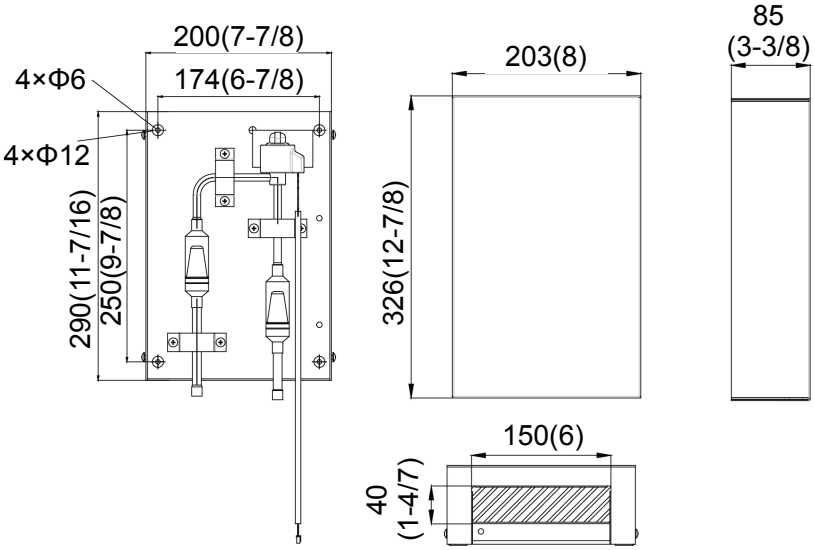

Size of EXV box for GMV-N192U/A-T(U):

Unit: mm(inch)

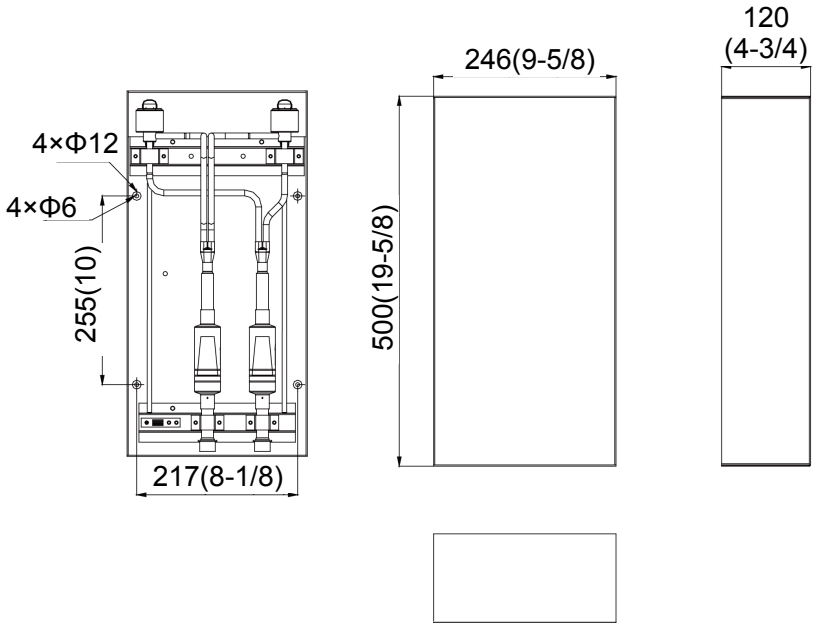

Maintenance space of control space:

Unit: mm(inch)

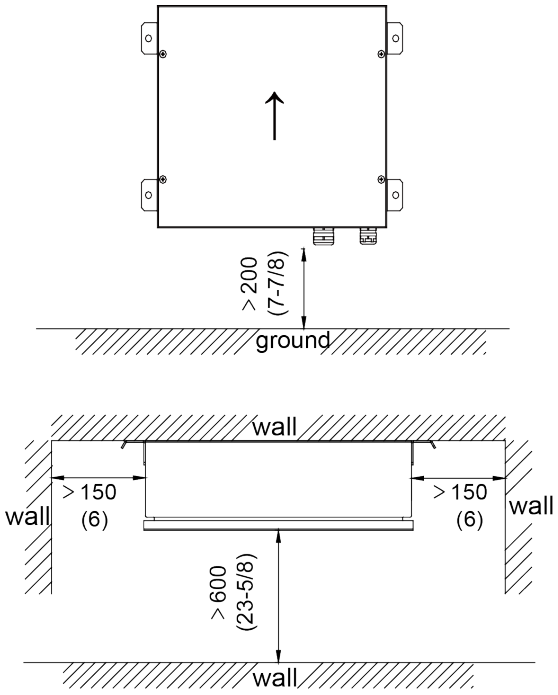

The control box must be installed upwards as the direction of the arrow shown in the figure

Maintenance space of EXV box:

Unit: mm(inch)

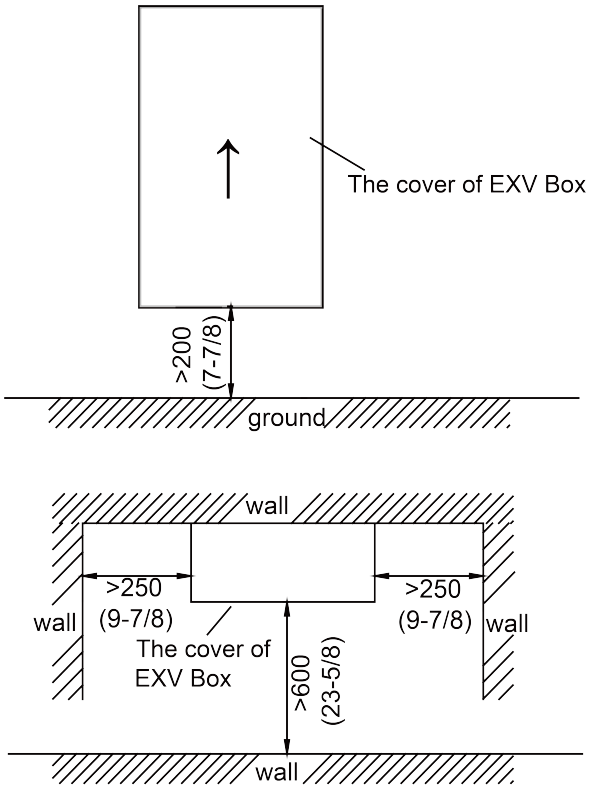

The EXV box must be installed upwards as the direction of the arrow shown in the figure

Size of control box for GMV-N12U/C-T(U) / GMV-N24U/C-T(U) / GMV-N48U/C-T(U) / GMV-N96U/C-T(U) and GMV-N192U/C-T(U) :

Unit: mm(inch)

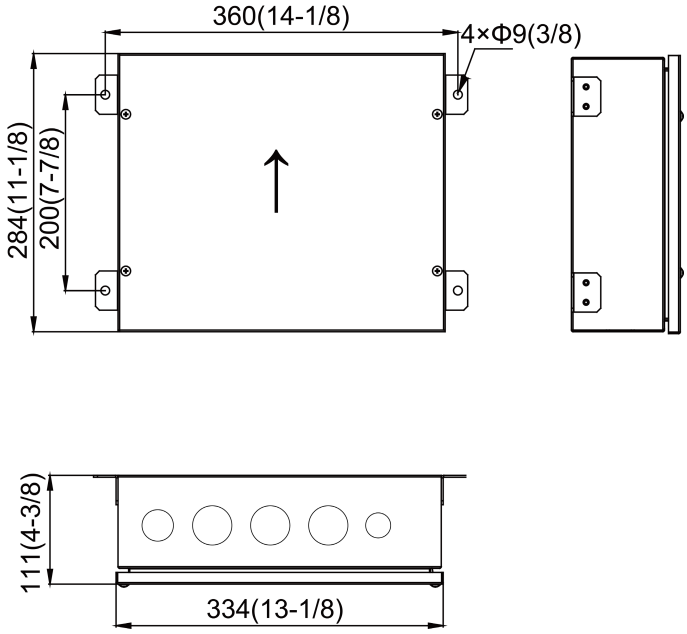

Size of EXV box for GMV-N12U/C-T(U):

Unit: mm(inch)

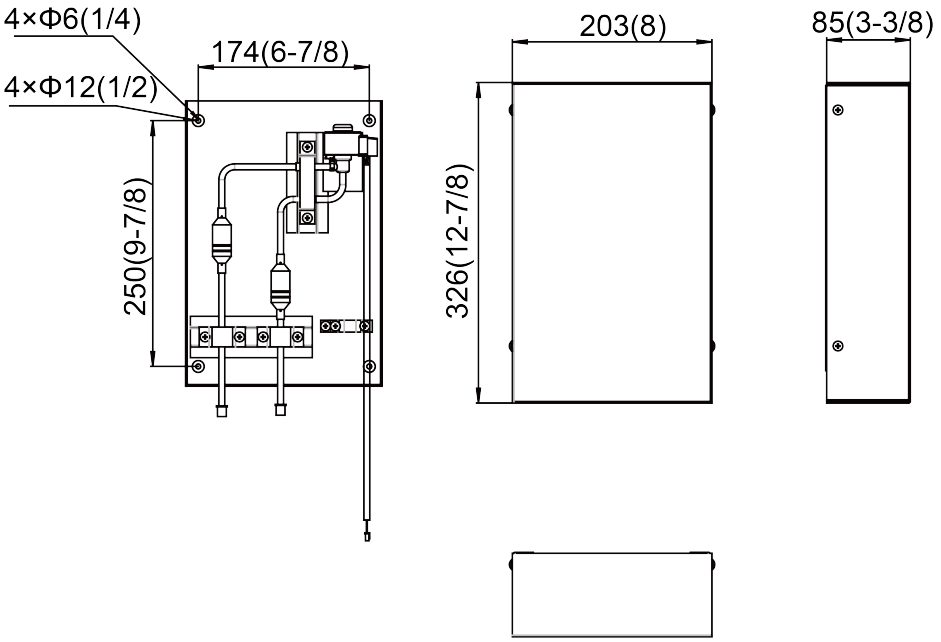

Size of EXV box for GMV-N24U/C-T(U) 、GMV-N48U/C-T(U) 、GMV-N96U/C-T(U):

Unit: mm(inch)

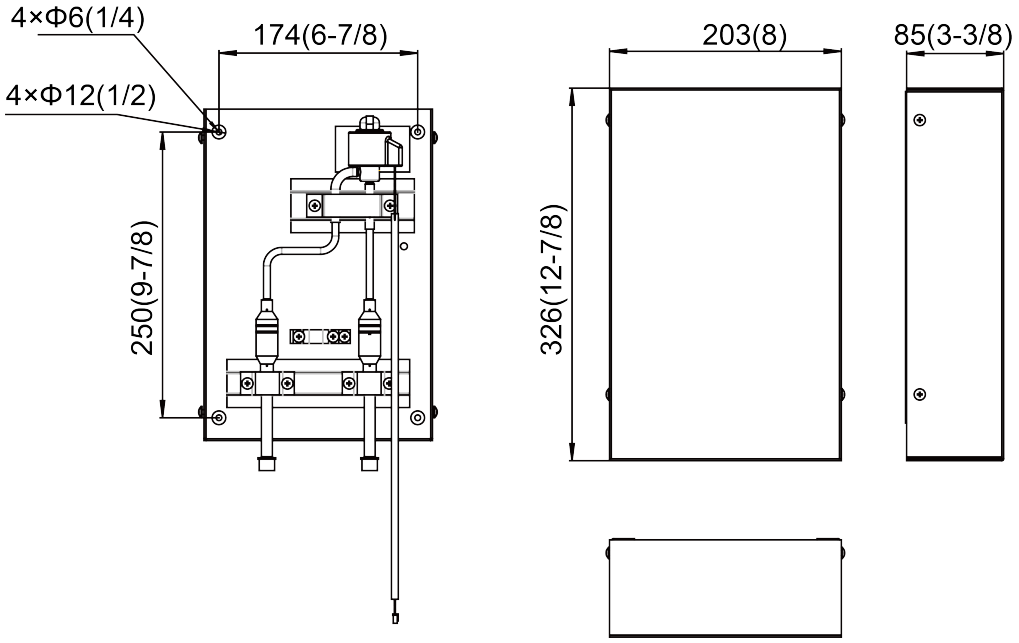

Size of EXV box for GMV-N192U/C-T(U):

Unit: mm(inch)

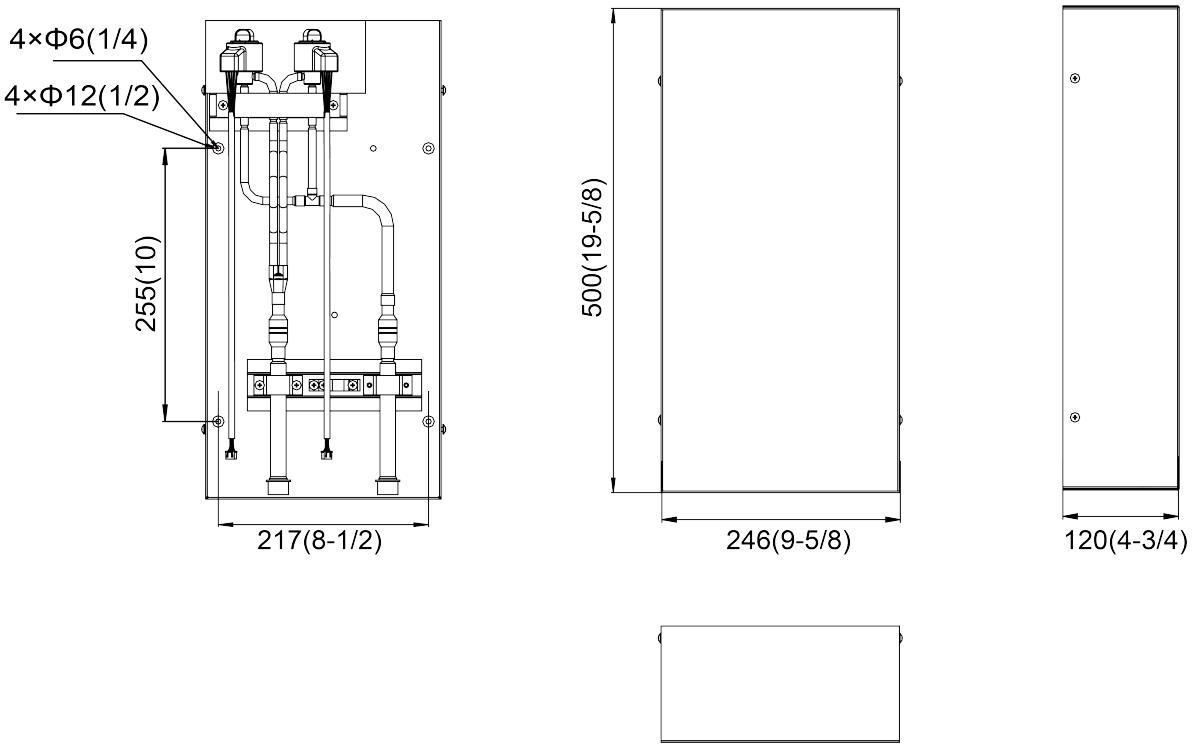

Maintenance space of control space:

Unit: mm(inch)

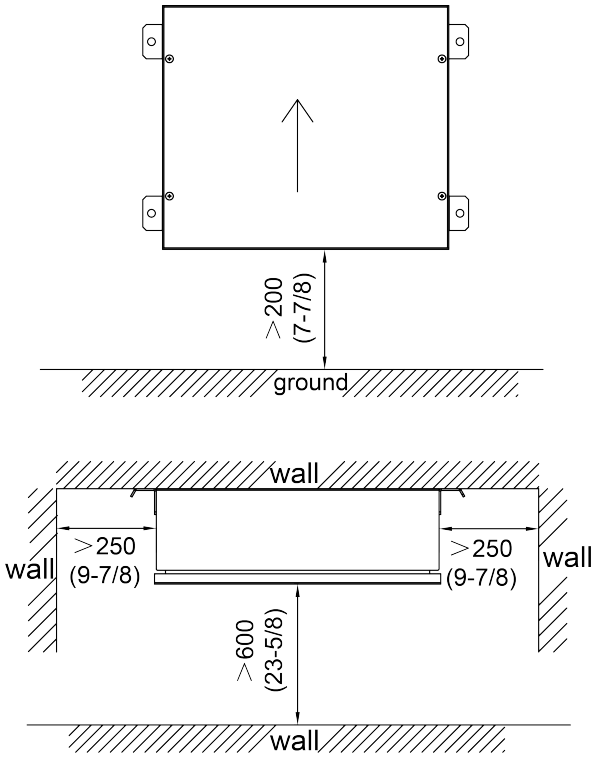

The control box must be installed upwards as the direction of the arrow shown in the figure

Maintenance space of EXV box:

Unit: mm(inch)

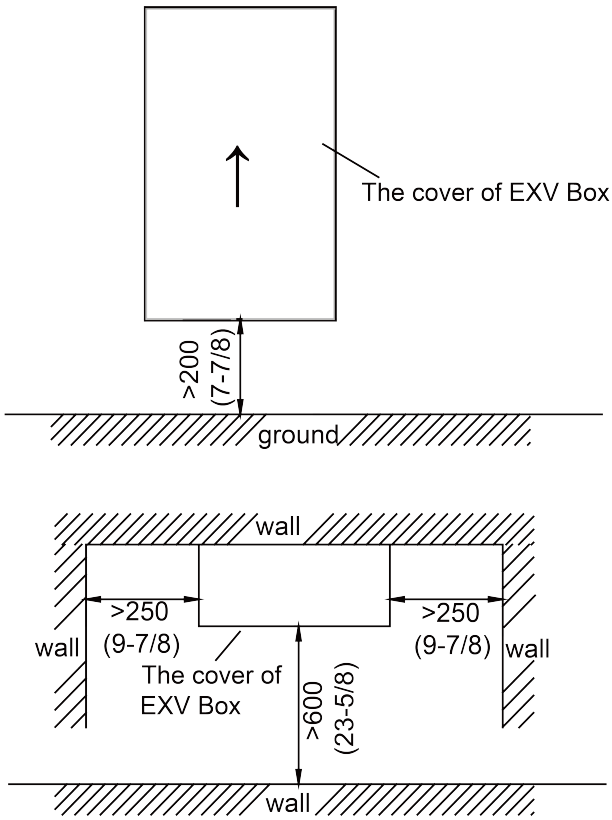

The EXV box must be installed upwards as the direction of the arrow shown in the figure

3.13.2 Installation notice

- The EXV box can be installed inside and outside. The control box should be installed inside.
- Do not install the EXV box in or on the outdoor unit.
- Do not put the option boxes in direct sunlight. Direct sunlight will increase the temperature inside the option boxes and may reduce its lifetime and influence its operation.
- Choose a flat and strong mounting surface.
- Make sure there is enough free space in front and in the side of the AHU-KIT unit for future maintenance.
- The installation site should be far away from heat source, inflammable gas and smoke.
- Keep the air handling unit, power supply wiring and transmission wiring at least 1 m(39-3/8 inch) away from televisions and radios. This is to prevent image interference and noise in those electrical appliances (Noise may be generated depending on the conditions under which the electric wave is generated, even if 1 m(39-3/8 inch) is kept).
- Make sure the electronic expansion valve is installed in an upright position.

3.13.3 Selection of air switch and power cord

Model	Power Supply	Circuit Breaker Capacity (A)	Minimum Sectional Area of Ground Wire (mm^2/AWG)	Minimum Sectional Area of Power Cord (mm^2/AWG)
GMV-N12U/A-T(U)	208/230V ~60Hz	15	1.0/AWG18	1.0/AWG18
GMV-N24U/A-T(U)		15	1.0/AWG18	1.0/AWG18
GMV-N48U/A-T(U)		15	1.0/AWG18	1.0/AWG18
GMV-N96U/A-T(U)		15	1.0/AWG18	1.0/AWG18
GMV-N192U/A-T(U)		15	1.0/AWG18	1.0/AWG18

Model	Power Supply	Circuit Breaker Capacity (A)	Minimum Sectional Area of Ground Wire (mm^2/AWG)	Minimum Sectional Area of Power Cord (mm^2/AWG)
GMV-N12U/C-T(U)	208/230V ~60Hz	15	1.0/AWG18	1.0/AWG18
GMV-N24U/C-T(U)		15	1.0/AWG18	1.0/AWG18
GMV-N48U/C-T(U)		15	1.0/AWG18	1.0/AWG18
GMV-N96U/C-T(U)		15	1.0/AWG18	1.0/AWG18
GMV-N192U/C-T(U)		15	1.0/AWG18	1.0/AWG18

3.14 Installation of 1-way Cassette Type Indoor Unit

3.14.1 Outline and Installation Dimension

Unit: mm (inch)

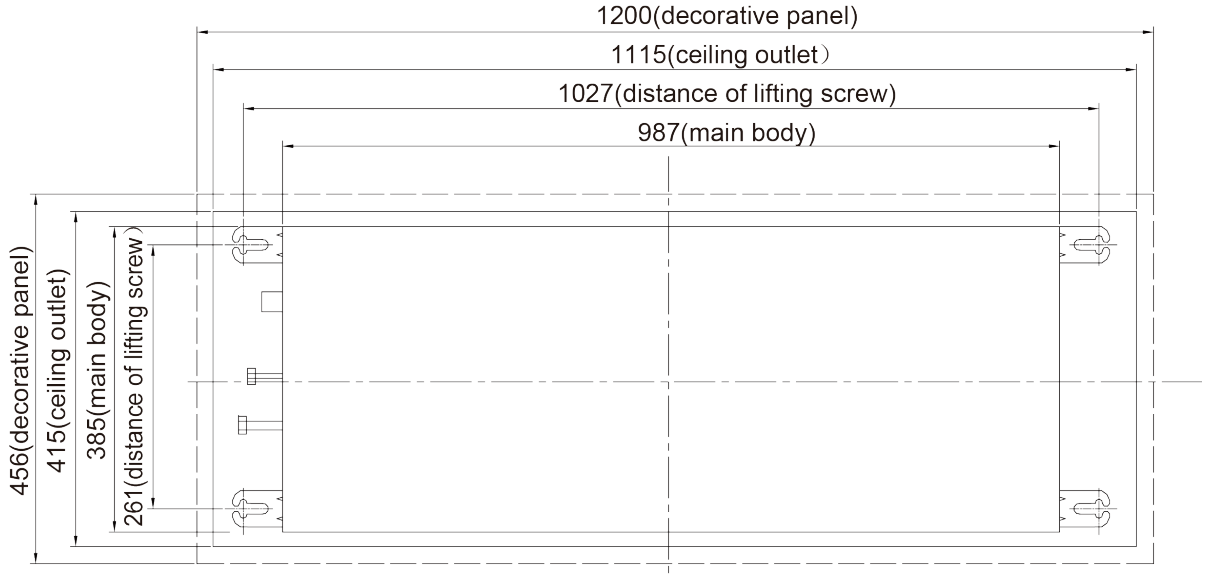

Unit: mm (inch)

Model	Indoor unit(A)	Suspension bolt pitch(B)	Ceiling opening(C)	Decoration panel(D)
GMV-ND07TD/A-T(U)	987(38-7/8)	1027(40-3/8)	1115(43-7/8)	1200(47-1/4)
GMV-ND09TD/A-T(U)	987(38-7/8)	1027(40-3/8)	1115(43-7/8)	1200(47-1/4)
GMV-ND12TD/A-T(U)	987(38-7/8)	1027(40-3/8)	1115(43-7/8)	1200(47-1/4)

3.14.2 Installation Space

Unit: mm (inch)

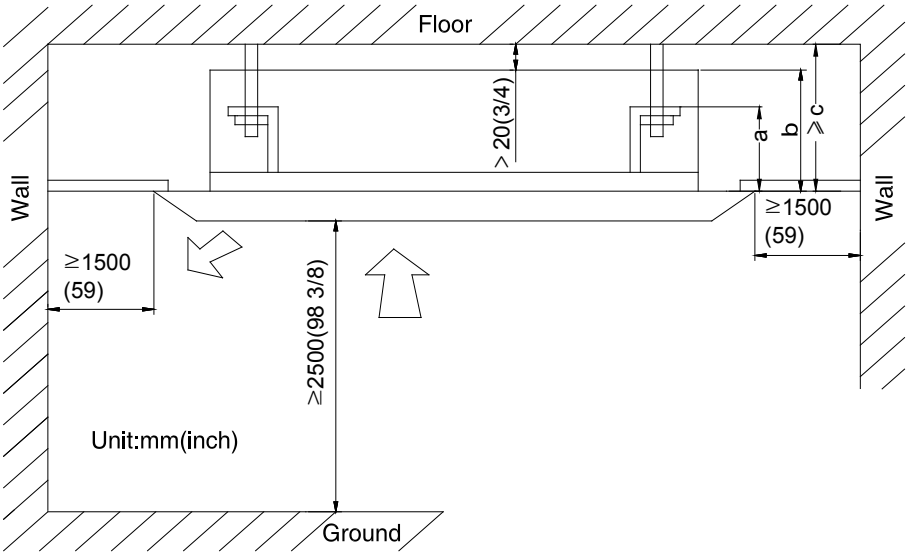

Model	a	b	c
07	141(5 1/2)	207(8 1/8)	227(8 7/8)
09	141(5 1/2)	207(8 1/8)	227(8 7/8)
12	141(5 1/2)	207(8 1/8)	227(8 7/8)

3.14.3 Installation Notice

- The unit shall be installed by the professional personnel according to this installation instruction to ensure proper use.
- Please contact the local Gree appointed service center before installation. Any malfunction caused by the unit that is not installed by the Gree appointed service center would probably not be dealt with on time because of the inconvenience of the business contact.
- It should be guided under the professional personnel when the air conditioner unit is moved to other place.
- The unit shall be installed in accordance with national standards or local regulations.
- Only qualified personnel can carry out installation work, please contact with local dealer before installation.
- Make sure all the installation work completed before energizing.

3.14.4 Selection of Air Switch and Power Cord

Model	Power Cord Size	Air Switch apacity (A)	Minimum Sectional Area of Ground Wire (mm²/AWG)	Minimum Sectional Area of Power Cord (mm²/AWG)
GMV-ND07TD/A-T(U)	208/230V/60Hz	15	1.0/AWG18	1.0/AWG18
GMV-ND09TD/A-T(U)	208/230V/60Hz	15	1.0/AWG18	1.0/AWG18
GMV-ND12TD/A-T(U)	208/230V/60Hz	15	1.0/AWG18	1.0/AWG18

3.15 Installation of General Static Pressure Duct Type Indoor Unit

3.15.1 Outline and Installation Dimension

The following diagram is applicable for units with the cooling capacity ranging from 30kBtu/h to 48kBtu/h.

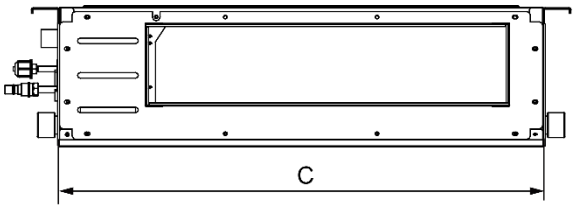

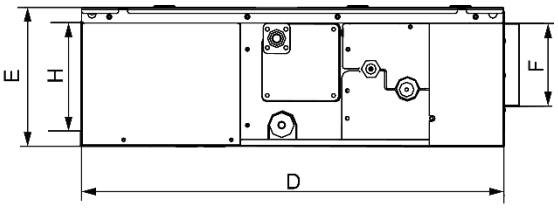

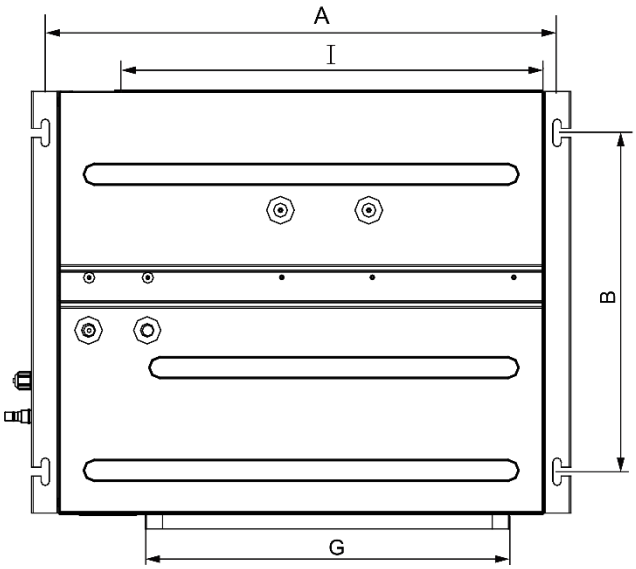

The following table lists the detailed dimensions.

Unit: mm(inch)

Model \ Item	A	B	C	D	E	F	G	H	I
GMV-ND30PLS/C-T(U) GMV-ND36PLS/C-T(U) GMV-ND42PLS/C-T(U) GMV-ND48PLS/C-T(U)	1379 (54-5/16)	565 (22-1/4)	1340 (52-3/4)	655 (25-13/16)	260 (10-1/4)	207 (8-1/8)	1153 (45-3/8)	220 (8-11/16)	1188 (46-3/4)

3.15.2 Outline and Installation Dimension

Unit: mm(inch)

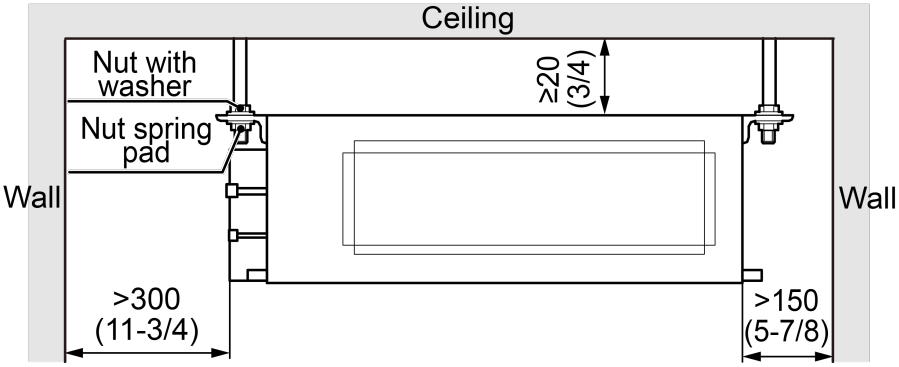

3.15.3 Installation Notice

(1) Installation dimension (refer to the outline dimension in the figure).

(2) Installation foundation.

(3) Make sure the top hanging rod, ceiling and building structure have sufficient strength to withstand the weight of unit.

(4) Installation site and environment.

1) Keep the unit from insolation and rain.

2) Keep the unit from fire, flammable objects, corrosive gap or exhaust gas.

3) Please reserve ventilation space.

4) Please reserve sufficient space for maintenance.

5) Please take proper measures to reduce noise and vibration.

(5) Electrical installation of unit.

All electrical installation must be done by professionals according to national and local laws and regulations.

The unit must be grounded reliably. Please connect wire according to the wiring diagram on the unit.

3.15.4 Selection of Air Switch and Power Cord

Model	Power Cord Size	Air Switch Capacity (A)	Minimum Sectional Area of Ground Wire (mm²/AWG)	Minimum Sectional Area of Power Cord (mm²/AWG)
GMV-ND30PLS/C-T(U)	208/230V/60Hz	15	1.0/AWG18	1.0/AWG18
GMV-ND36PLS/C-T(U)	208/230V/60Hz	15	1.0/AWG18	1.0/AWG18
GMV-ND42PLS/C-T(U)	208/230V/60Hz	15	1.0/AWG18	1.0/AWG18
GMV-ND48PLS/C-T(U)	208/230V/60Hz	15	1.0/AWG18	1.0/AWG18

3.16 Installation of 360°Air Discharge Compact Cassette Type Indoor Unit

3.16.1 Outline and Installation Dimension

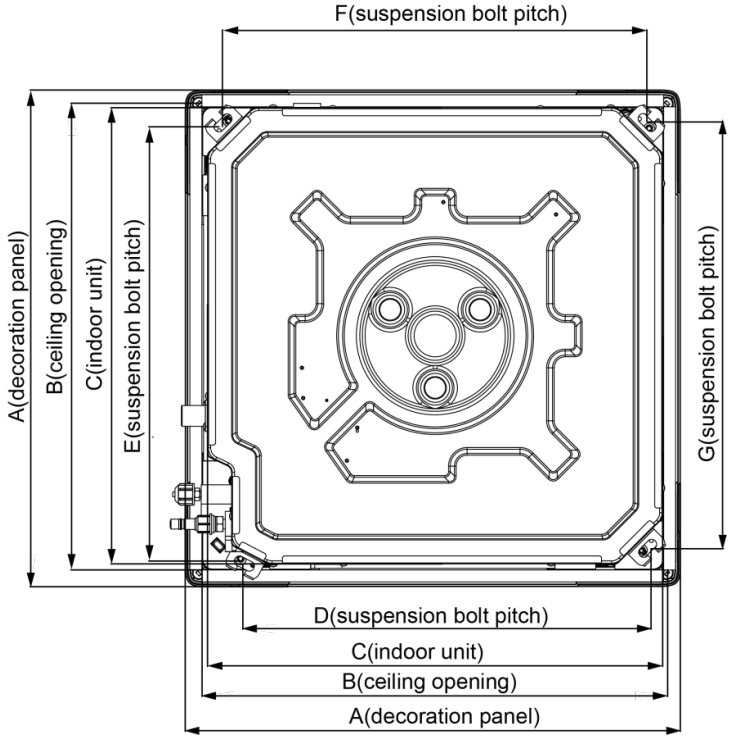

Unit: mm (inch)

Model	A	B	C	D	E	F	G
GMV-ND05T/E-T(U) GMV-ND07T/E-T(U) GMV-ND09T/E-T(U) GMV-ND12T/E-T(U) GMV-ND15T/E-T(U) GMV-ND18T/E-T(U)	620 (24-3/8)	580 (22-13/16)	570 (22-7/16)	505 (19-7/8)	550 (22-5/8)	530 (20-7/8)	530 (20-7/8)

3.16.2 Installation Space

Unit: mm (inch)

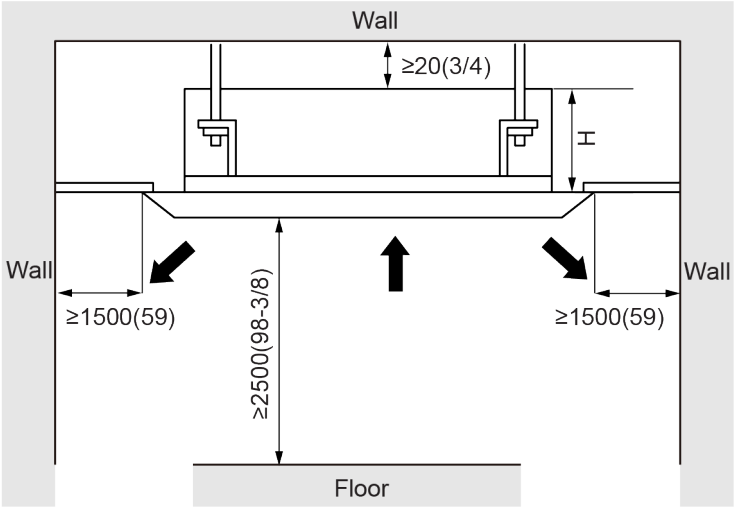

Unit: mm (inch)

Model	H
GMV-ND05~18T/E-T(U)	305(12)

3.16.3 Installation notice

- The unit shall be installed by the professional personnel according to this installation instruction to ensure proper use.
- Please contact the local Gree appointed service center before installation. Any malfunction caused by the unit that is not installed by the Gree appointed service center would probably not be dealt with on time because of the inconvenience of the business contact.
- It should be guided under the professional personnel when the air conditioner unit is moved to other place.
- The unit shall be installed in accordance with national standards or local regulations.
- Only qualified personnel can carry out installation work, please contact with local dealer before installation.
- Make sure all the installation work completed before energizing.
- The appliances are not accessible to general public.

3.17 Installation of 360°Air Discharge Cassette Type Indoor Unit

3.17.1 Outline and Installation Dimension

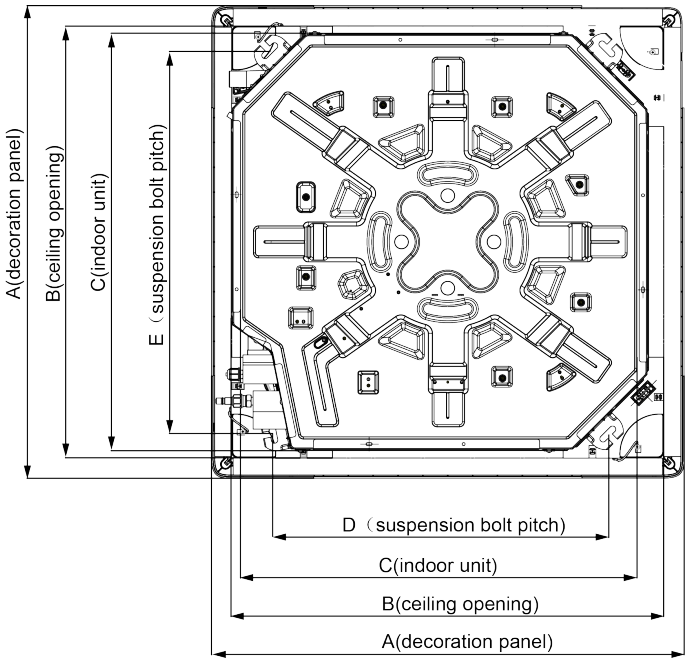

Unit: mm (inch)

Model	A	B	C	D	E
GMV-ND07~54T/C-T(U)	950(37 3/8)	890(35)	840(33 1/8)	680(26 3/4)	780(30 3/4)

3.17.2 Installation Space

Unit: mm (inch)

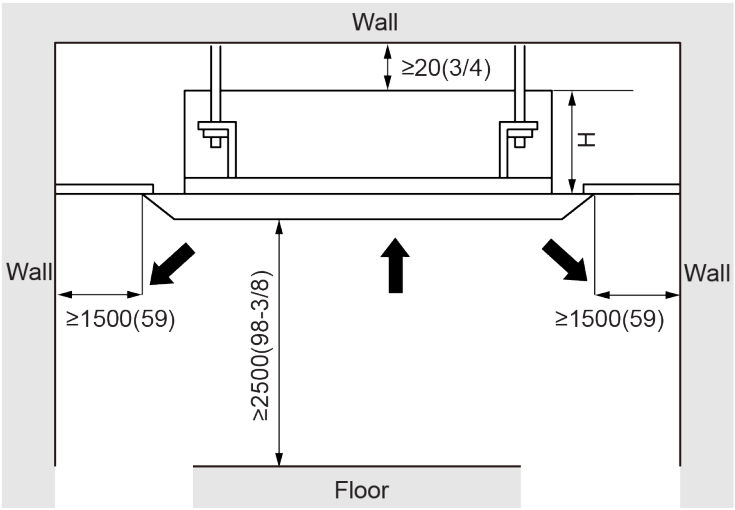

Unit: mm (inch)

Model	H
GMV-ND07~24T/C-T(U)	280(11)
GMV-ND30~54T/C-T(U)	330(13)

3.17.3 Installation notice

- The unit shall be installed in accordance with national standards or local regulations.
- Only qualified personnel can carry out installation work, please contact with local dealer before installation.
- Make sure all the installation work completed before energizing.
- The appliances are not accessible to general public.

3.17.4 Selection of Air Switch and Power Cord

Model	Power Cord Size	Air Switch apacity (A)	Minimum Sectional Area of Ground Wire (mm²/AWG)	Minimum Sectional Area of Power Cord (mm²/AWG)
GMV-ND07T/C-T(U)	208/230V~,60Hz	15	1.0/AWG18	1.0/AWG18
GMV-ND09T/C-T(U)		15	1.0/AWG18	1.0/AWG18
GMV-ND12T/C-T(U)		15	1.0/AWG18	1.0/AWG18
GMV-ND15T/C-T(U)		15	1.0/AWG18	1.0/AWG18
GMV-ND18T/C-T(U)		15	1.0/AWG18	1.0/AWG18
GMV-ND22T/C-T(U)		15	1.0/AWG18	1.0/AWG18
GMV-ND24T/C-T(U)		15	1.0/AWG18	1.0/AWG18
GMV-ND30T/C-T(U)		15	1.0/AWG18	1.0/AWG18
GMV-ND36T/C-T(U)		15	1.0/AWG18	1.0/AWG18
GMV-ND42T/C-T(U)		15	1.0/AWG18	1.0/AWG18
GMV-ND48T/C-T(U)		15	1.0/AWG18	1.0/AWG18
GMV-ND54T/C-T(U)		15	1.0/AWG18	1.0/AWG18

4 Installation of Connection Pipe

⚠CAUTION	
①	Conform to the following principles during pipe connection: Connection pipe should be as short as possible, so is the height difference between indoor and outdoor units. Keep the number of bends as little as possible. Radius of curvature should be as large as possible.
②	Weld the connection pipe between indoor and outdoor units. Please strictly follow the requirements for welding process. Rosin joint or pin hole is not allowed.
③	When laying the pipe, be careful not to distort it. Radius of bending parts should be over 200mm (8inch). Note that pipes cannot be repeatedly bent or stretched; otherwise the material will get harder. Do not bend or stretch the pipe for more than 3 times at the same position.

4.1 Flaring Process

(1) Use pipe cutter to cut the connection pipe in case it is unshaped.

(2) Keep the pipe downward in case cutting scraps get into the pipe. Clear away the burrs after cutting.

(3) Remove the flared nut connecting indoor connection pipe and outdoor unit. Then use flaring tool to fix the flared nut into the pipe (as shown in Fig.4.1).

(4) Check if the flared part is flaring evenly and if there is any crack.

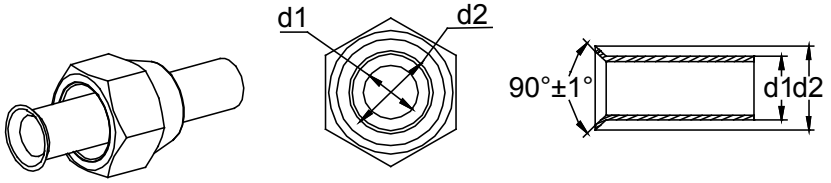

Fig. 4.1

4.2 Pipe Bending

(1) Reshape the pipe by hand. Be careful not to damage the pipe.

(2) Do not bend the pipe over 90°.

(3) If pipe is repeatedly bent or stretched, it will get hard and difficult to bend and stretch againch Therefore, do not bend or stretch the bend for over 3 times.

(4) In case that direct bending will open cracks to the pipe, first use sharp cutter to cut the insulating layer, as shown in Fig. 4.3. Do not bend the pipe until it is exposed. When bending is done, wrap the pipe with insulating layer and then secure it with adhesive tape.

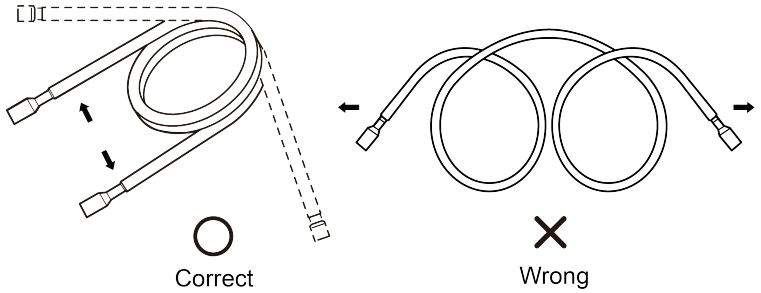

Fig. 4.2

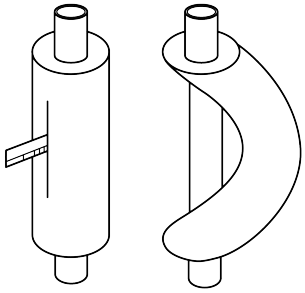

Fig. 4.3

4.3 Indoor Pipe Connection

(1) Remove pipe cover and pipe plug.

(2) Direct the flared part of copper pipe to the center of screwed joint. Twist on the flared nut tightly by hand, as in Fig. 4.4 (Make sure indoor pipe is correctly connected. Improper location of the center will prevent flared nut from being securely twisted. Thread of nut will get damaged if the flared nut is twisted forcibly).

(3) Use torque wrench to twist on the flared nut tightly until the wrench gives out a click sound (Hold the handle of wrench and make it at right angle to the pipe. as in Fig. 4.5).

⚠CAUTION	
①	Use sponge to wrap the un-insulated connection pipe and joint. Then tie the sponge tightly with plastic tape.
②	Connection pipe should be supported by a bearer rather than the unit.
③	The bending angle of piping should not be too small; otherwise the piping might have cracks. Please use a pipe bender to bend the pipe.
④	When connecting IDU with connection pipe, do not pull the big and small joints of IDU with force in case the capillary tube or other tubes have cracks and cause leakage.

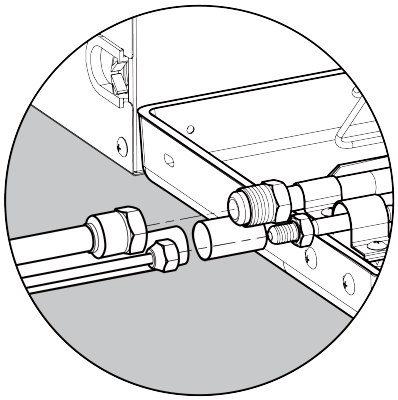

Fig. 4.4

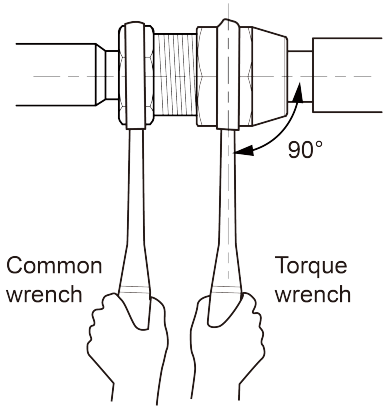

Fig. 4.5

Pipe Diameter(mm/inch)	Tightening Torque
6(1/4)	15-30N·m(11-22ft.-1b.)
9.5(3/8)	35-40N·m(26-29ft.-1b.)
12.7(1/2)	45-50N·m(33-37ft.-1b.)
16(5/8)	60-65N·m(44-48ft.-1b.)

5 Installation of Drain Pipe

5.1 Precautions When Doing the Piping Work

- Keep piping as short as possible and slope it downwards at a gradient of at least 1/100 so that air may not remain trapped inside the pipe.

  For example:

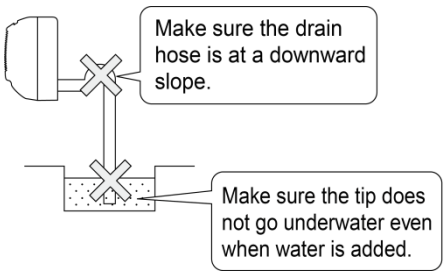

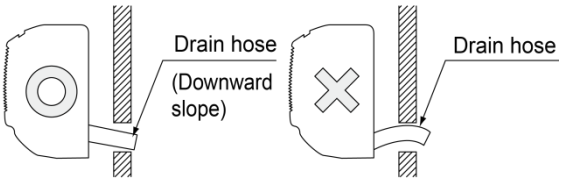

- Keep pipe size equal to or greater than that of the connecting pipe.
- Install the drain piping as shown and take measures against condensation. Improperly rigged piping could lead to leaks and eventually wet furniture and belongings.

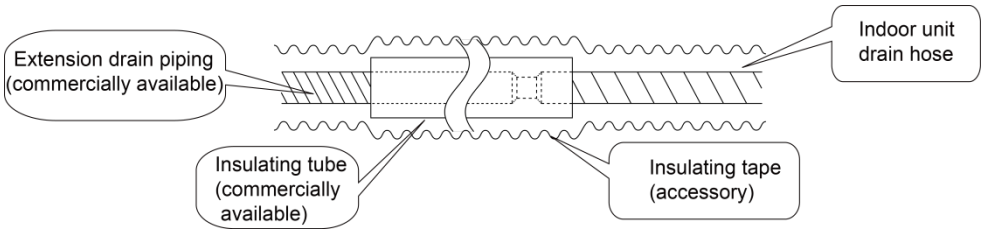

- When directly connecting a hard vinyl chloride pipe joint to the drain hose connected to the indoor unit, use a commercially available hard vinyl chloride pipe joint (nominal diameter 13mm (1/2 inch)).

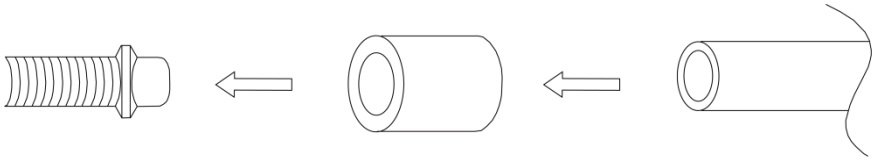

Drain hose connected to the indoor unit | Commercially available hard vinyl chloride pipe joint (nominal diameter 13mm) | Commercially available hard vinyl chloride pipe (nominal diameter 13mm)

- Drain hose connected to the indoor unit Commercially available hard vinyl chloride pipe joint (nominal diameter 13mm(1/2 inch)), Commercially available hard vinyl chloride pipe(nominal diameter 13mm(1/2 inch))
- Do not connect the drain piping directly to sewage pipes that smell of ammonia. The ammonia in the sewage might enter the indoor unit through the drain pipes and corrode the heat exchanger.

5.2 Installing the Drain Pipes

- Insert the drain hose into the drain outlet, and tighten the clamp securely with tape.
- Tighten the clamp until the screw head is less than 4mm (3/16 inch) from the hose.

①. Metal clamp (accessory)
②. Drain hose (accessory)
③. Grey tape (accessory)

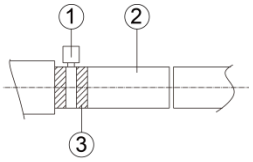

- Insulate the pipe clamp and the drain hose using heat insulation sponge.

①. Metal clamp (accessory)
②. Insulation sponge (accessory)

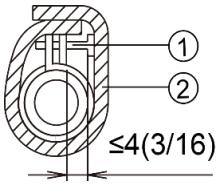

- Install water trap as shown below.
- Install one water trap for each unit.
- Installation of water trap shall consider easy cleaning in the future.

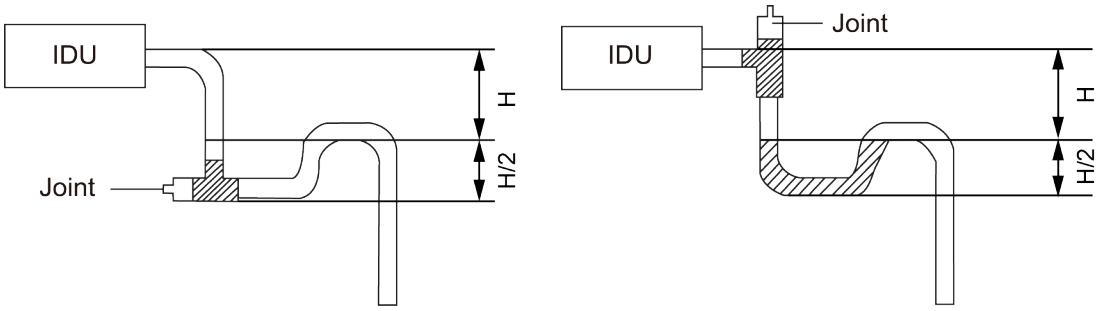

- Connection of drainage branch pipe to the standpipe or horizontal pipe of drainage main pipe
- The horizontal pipe cannot be connected to the vertical pipe at a same height. It can be connected in a manner as shown below:

  NO.1: 3-way connection of drainage pipe joint

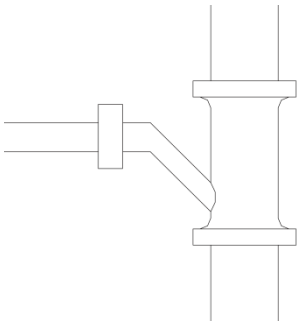

3-way connection
of drainage pipe joint

NO.2: Connection of drain elbow

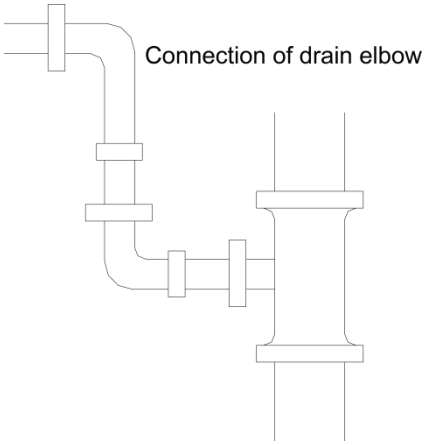

NO.3: Connection of horizontal pipe

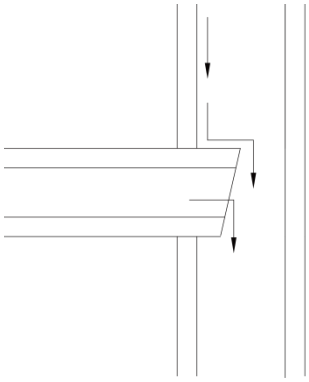

Connection of horizontal pipe

- When unifying multiple drain pipes, install the pipes as shown below. Select converging drain pipes whose gauge is suitable for the operating capacity of the unit.(take the cassette type unit for example)

Unit: mm (inch)

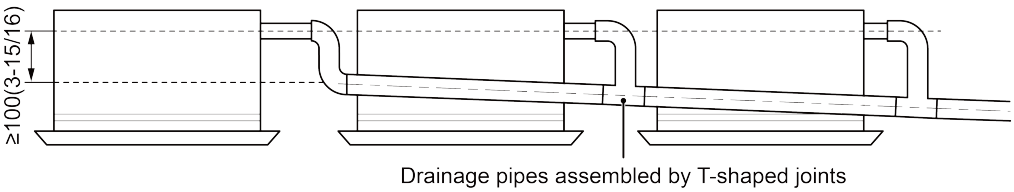

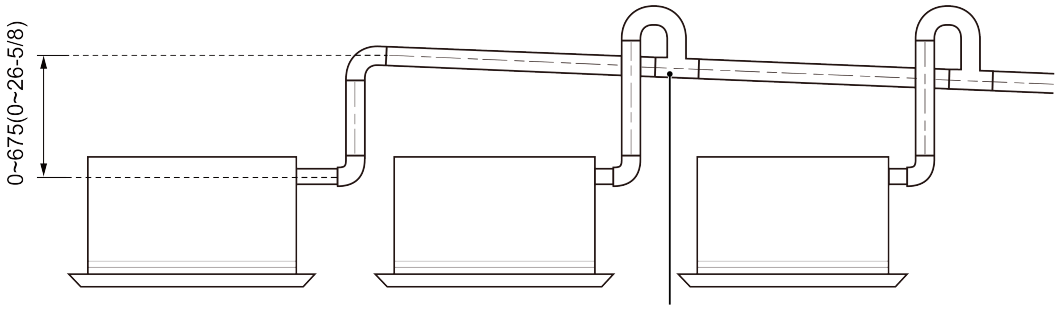

5.3 Precautions When Doing Riser Piping Work

(1) Make sure that heat insulation work is executed on the following 2 spots to prevent any possible water leakage due to dew condensation.

1) Connect the drain hose to the drain raiser pipe, and insulate them.

2) Connect the drain hose to the drain outlet on the indoor unit, and tighten it with the clamp.

Unit: mm (inch)

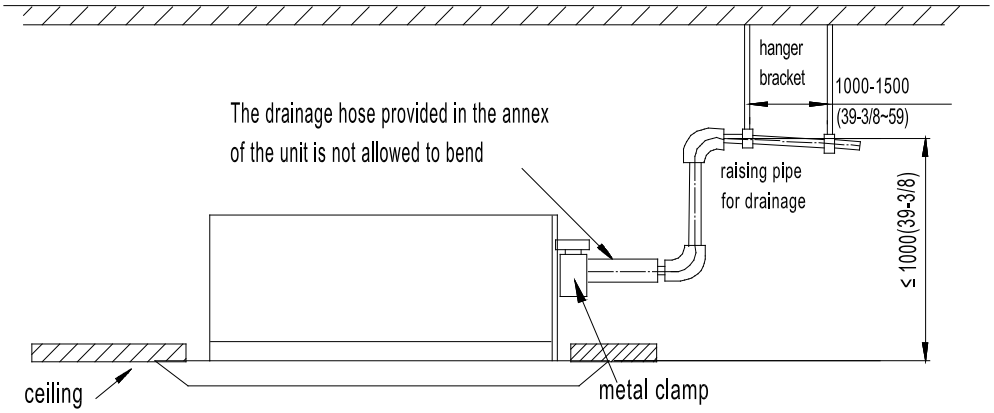

(2) Secure a downward gradient of 1/100 or more for the drain pipe. To accomplish this, mount supporting brackets at an interval of 1 -1.5 m (39-3/8~59in).

Unit: mm (inch)

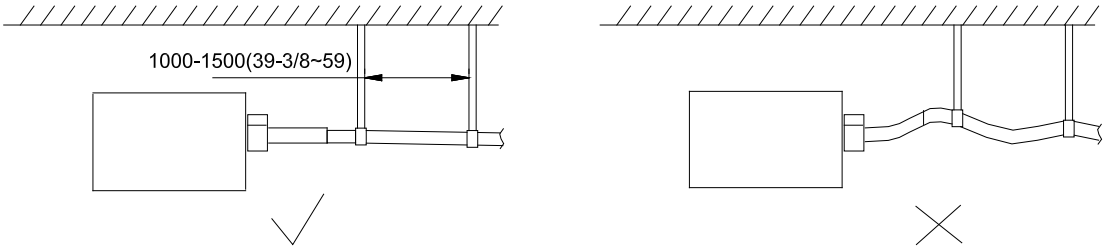

5.4 Testing of Drain Piping

- After piping work is finished, check if drainage flows smoothly.
- Shown in the figure, Add approximately 1liter of water slowly into the drain pan and check drainage flow during COOL running.

6 Electrical Installation

- The wiring must be in accordance with the local rules.
- Rated supply voltage and special circuit for air conditioner must be used.
- Do not pull the power cord forcefully.
- All the electric installations must be carried out by specialist technicians in accordance with the local laws, rules and these instructions.
- The diameter of flexible wire should be wide enough. Replace the damaged power cord and connecting wire with special flexible wire.
- The earthing shall be reliable and connected to the special earthing device on the construction. The installation must be done by specialist technicians. The leak protection switch and air switch with enough capacity must be installed. The air switch shall have both the magnetic tripping and thermal tripping functions to ensure protection against the short circuit and overload.
- Earthed Requirements
- The air conditioner belongs to I type electric appliances. The reliable earthed action is a must.
- The yellow and green wire inside the air conditioner is the earthed wire. Do not use it for other purpose or even cut off it. Do not fix it with tapping screw, Otherwise it may cause electric shock.
- The earthed resistance must meet the requirements of national standard GB17790.
- There should be reliable earthed terminal for the power supply. Never connect the earth lead to the following articles:

  ①water pipe; ②gas pipe; ③drain pipe; ④unreliable place considered by professionals.

MAINTENANCE

CHAPTER 4 MAINTENANCE

1 Malfunction List

1.1 Malfunction List for the Wired Controller

Error Code	Content	Error Code	Content	Error Code	Content
L0	Indoor Unit Error	LA	Indoor Units Incompatibility Error	d9	Jumper Cap Error
L1	Indoor Fan Protection	LH	Low Air Quality Warning	dA	Indoor Unit Network Address Error
L2	E-heater Protection	LC	ODU-IDU Incompatibility Error	dH	Wired Controller PCB Error
L3	Water Full Protection	d1	Indoor Unit PCB Error	dC	Capacity DIP Switch Setting Error.
L4	Wired Controller Power Supply Error	d3	Ambient Temperature Sensor Error	dL	Outlet Air Temperature Sensor Error
L5	Freeze protection	d4	Inlet Pipe Temperature Sensor Error	dE	Indoor Unit CO_2 Sensor Error
L7	No Master Indoor Unit Error	d6	Outlet Pipe Temperature Sensor Error	dy	Water Temperature Sensor Error
L8	Power Insufficiency Protection	d7	Humidity Sensor Error	C0	Communication Error
L9	Quantity Of Group Control Indoor Units Setting Error	d8	Water Temperature Error	AJ	Filter Cleaning Reminder
db	Special Code: Field Debugging Code				

1.2 Display of Light Board (Only for Two-way Cassette Type Indoor Unit)

The panel of this model is without nixie tube display. The error codes will be displayed through the power light, operation light and timer light; ○, ● and ◎ stand for on, off and blink respectively.

Power light	○	◎	◎	◎	◎
Operation light	◎	●	○	○	◎
Timer light	●	○	●	○	●

Error code display sheet

Error code	C0	A0	A3/A4	L0	L1	L3	L5	d1	d3	d4	d6	d7	E0	db
Power light	◎	○	○	●	●	●	○	◎	◎	◎	●	○	●	◎
Operation light	◎	◎	○	●	○	◎	●	○	●	◎	◎	◎	◎	●
Timer light	◎	◎	◎	◎	◎	◎	◎	◎	◎	○	○	○	●	●
Error description	Communication error	To be debugged	Defrosting/ oil return	Indoor unit error	Indoor fan protection	Water full protection	Freeze protection	Indoor unit PCB error	Ambient temperature sensor error	Inlet pipe temperature sensor error	Outlet pipe temperature sensor error	Humidity sensor error	Outdoor unit error	Field debugging code

1.3 Exception Analyzing and Troubleshooting

1.3.1 “d1” Indoor circuit board error

Error display: IDU wired controller and IDU receive light board will display

Error judgment condition and method:

Check if the reading of address chip and memory chip of IDU mainboard is normal. If the data of address chip and memory chip cannot be read, it is abnormal

Possible reason:

- Address chip is abnormal
- Memory chip is abnormal. Replace main control board directly

Troubleshooting:

Replace main control board directly

1.3.2 “d3” Ambient temperature sensor error

Error display: IDU wired controller and IDU receive light board will display

Error judgment condition and method:

Sample the AD value of temperature sensor through temperature sensor detecting circuit and judge the range of AD value, if the sampling AD value exceeds upper limit and lower limit in 5 seconds continuously, report the error

Possible reason:

- Poor contact between ambient temperature sensor and terminal in mainboard interface
- Ambient temperature sensor is abnormal
- Detecting circuit is abnormal

Troubleshooting:

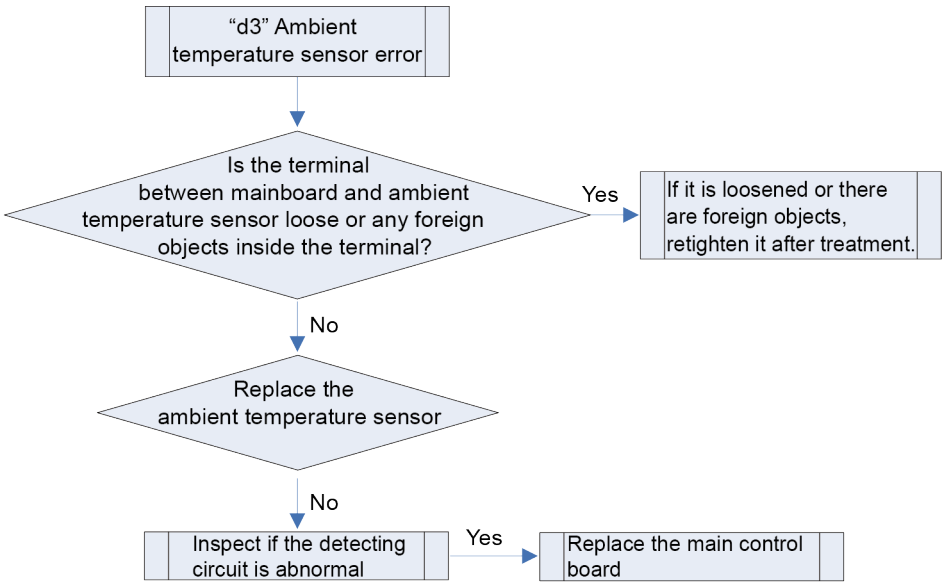

1.3.3 “d4” Inlet pipe temperature sensor error

Error display: IDU wired controller and IDU receive light board will display

Error judgment condition and method:

Sample the AD value of temperature sensor through temperature sensor detecting circuit and judge the range of AD value. If the sampling AD value exceeds upper limit and lower limit in 5 seconds continuously, report the error

Possible reason:

- Poor contact between inlet pipe temperature sensor and terminal in mainboard interface
- Inlet pipe temperature sensor is abnormal
- Detecting circuit is abnormal

Troubleshooting:

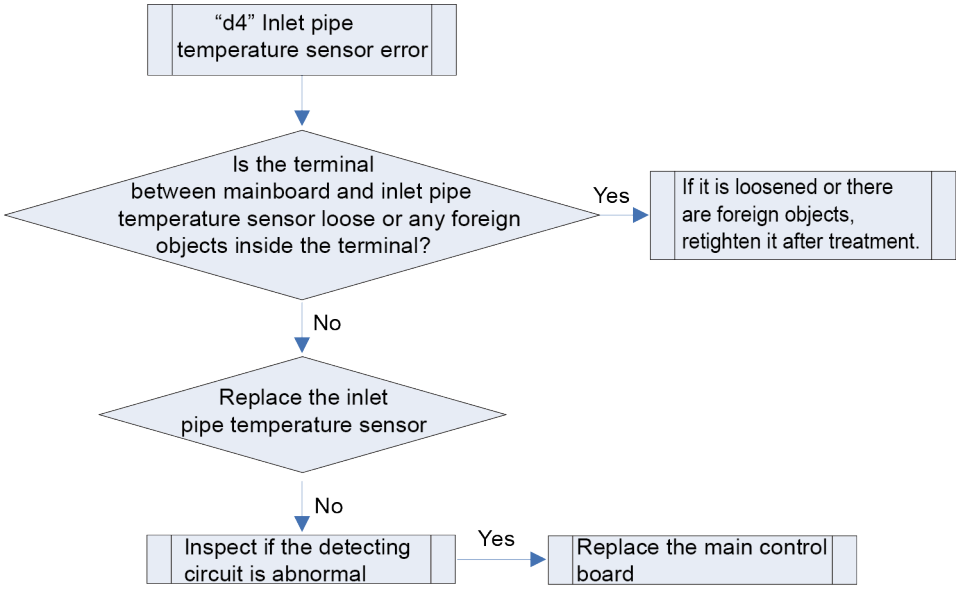

1.3.4 “d6” Outlet pipe temperature sensor error

Error display: IDU wired controller and IDU receive light board will display

Error judgment condition and method:

Sample the AD value of temperature sensor through temperature sensor detecting circuit and judge the range of AD value. If the sampling AD value exceeds upper limit and lower limit in 5 seconds continuously, report the error

Possible reason:

- Poor contact between outlet pipe temperature sensor and terminal in mainboard interface
- Outlet pipe temperature sensor is abnormal
- Detecting circuit is abnormal

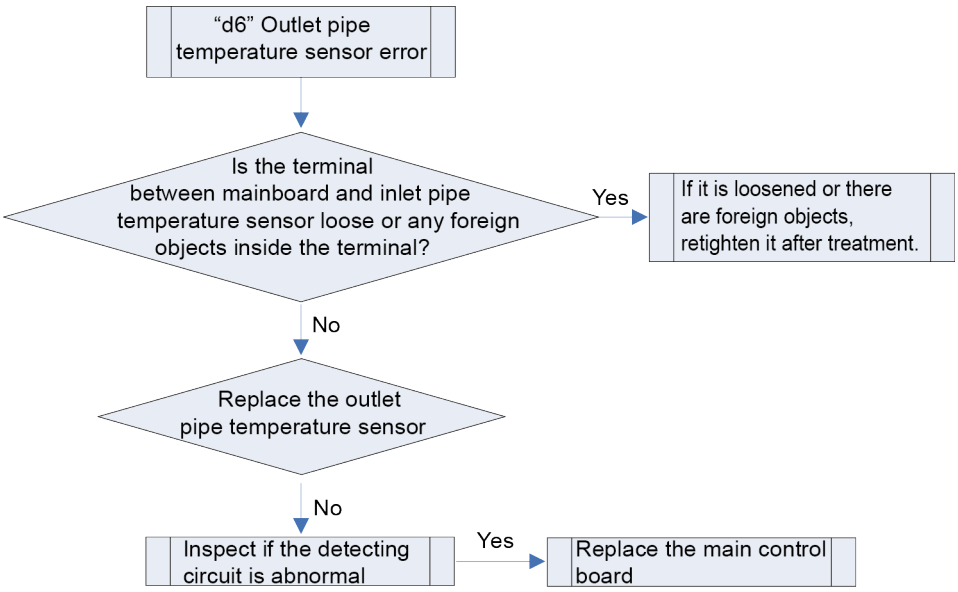

1.3.5 "d7" Humidity sensor error

Error display: IDU wired controller and IDU receive light board will display

Error judgment condition and method:

Sample the AD value of temperature sensor through temperature sensor detecting circuit and judge the range of AD value. If the sampling AD value exceeds upper limit and lower limit in 5 seconds continuously, report the error

Possible reason:

- Poor contact between humidity sensor and terminal in mainboard interface
- Humidity sensor is abnormal
- Detecting circuit is abnormal

Troubleshooting:

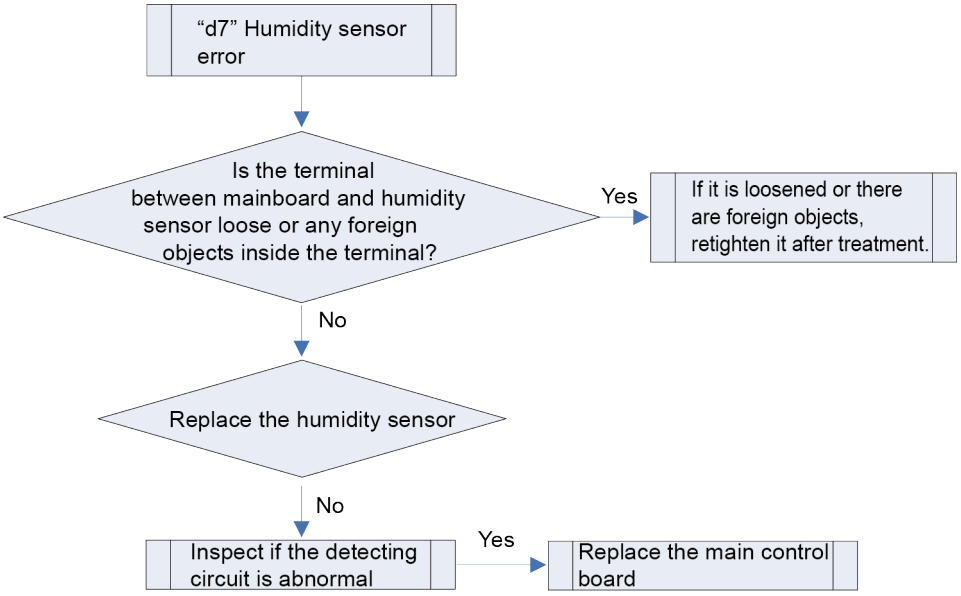

1.3.6 "d9" Jumper cap error

Error display: IDU wired controller and IDU receive light board will display

Error judgment condition and method:

Possible reason:

- If jumper cap model doesn't match with mainboard, report the error
- Jumper cap is not installed
- Jumper cap model is wrong
- Detecting circuit is abnormal

Troubleshooting:

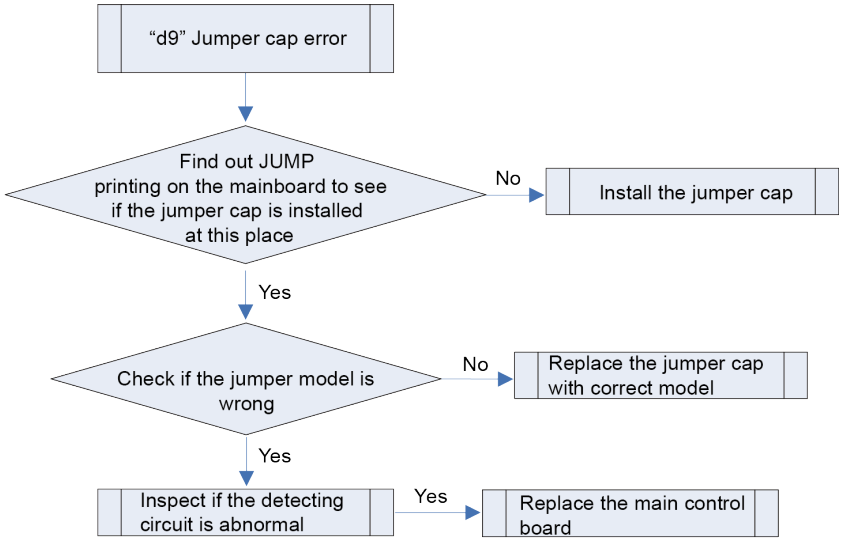

1.3.7 “dA” IDU network address error

Error display: IDU wired controller and IDU receive light board will display

Error judgment condition and method:

Through testing the IDU address chip and IP address, if address chip cannot be read, IDU IP is 0 or IP is in conflict, report the error.

Possible reason:

- ODU allocated address is wrong
- IDU treatment is wrong
- Address chip is abnormal

Troubleshooting:

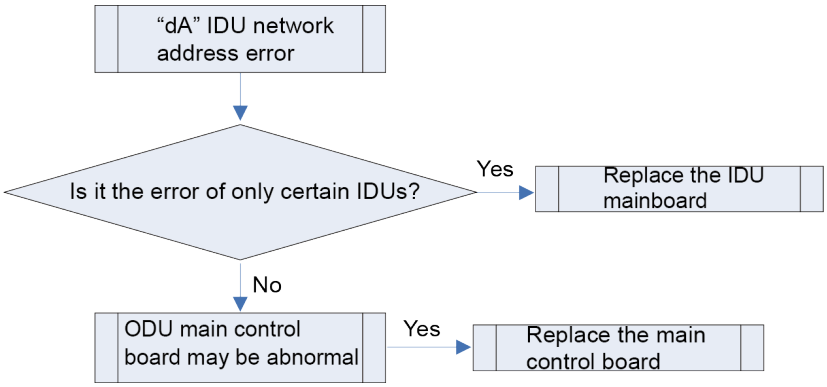

1.3.8 “dH” wired controller circuit board error

Error display: IDU wired controller and IDU receive light board will display

Error judgment condition and method:

Wired controller IIC communication is abnormal

Possible reason:

- Communication of wired controller touch button board and display board IIC is abnormal;
- Read and write of wired controller memory chip IIC is abnormal (when memory chip is existed);

Troubleshooting:

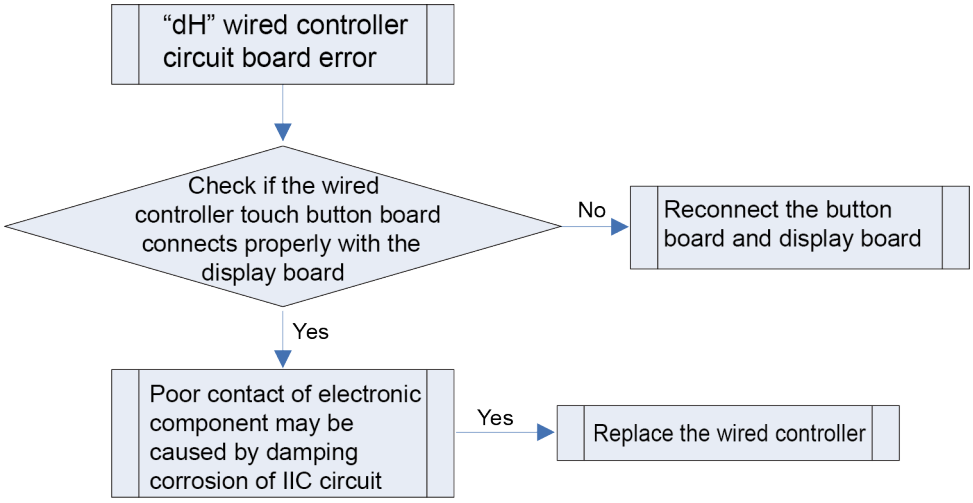

1.3.9 “dC” Capacity DIP switch setting error

Error display: IDU wired controller and IDU receive light board will display

Error judgment condition and method:

If capacity DIP switch is set to the wrong position, report the error.

Possible reason:

- Capacity DIP switch is set to the wrong position
- Detecting circuit is abnormal

Troubleshooting:

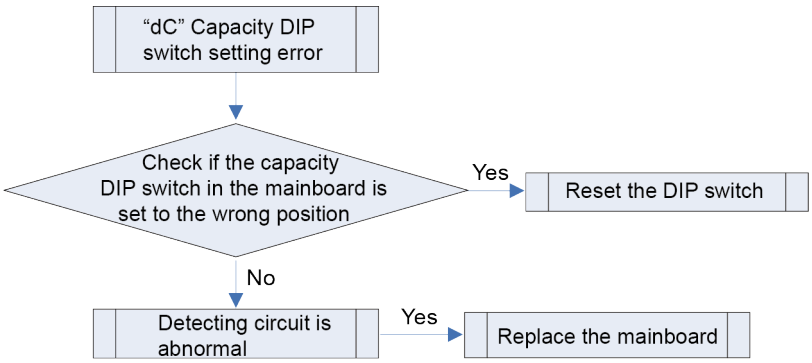

1.3.10 “dL” Air outlet temperature sensor error

Error display: IDU wired controller and IDU receive light board will display

Error judgment condition and method:

Sample the AD value of temperature sensor through temperature sensor detecting circuit and judge the range of AD value. If the sampling AD value exceeds upper limit and lower limit in 5 seconds continuously, report the error

Possible reason:

- Poor contact between air outlet temperature sensor and terminal in mainboard interface
- Air outlet temperature sensor is abnormal
- Detecting circuit is abnormal

Troubleshooting:

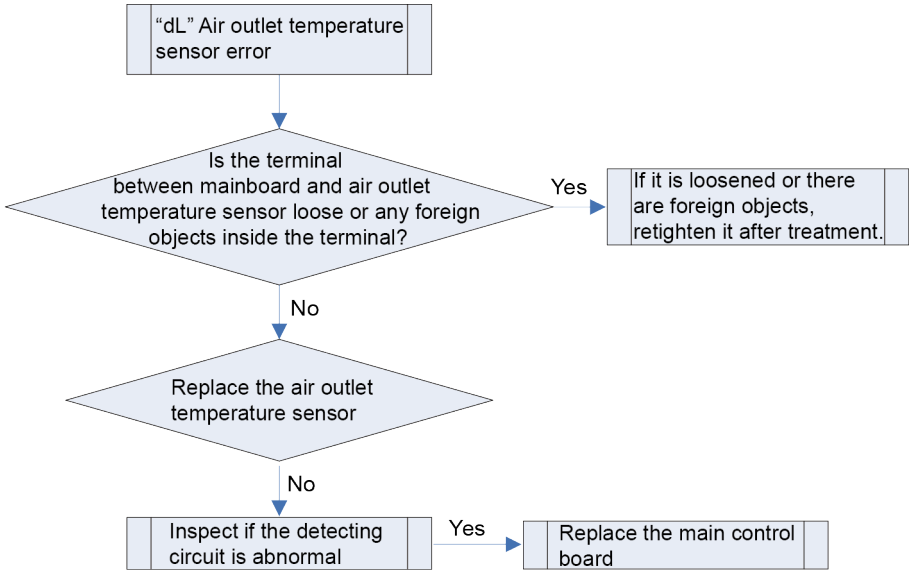

1.3.11 "db" Project debugging

Error display: ODU mainboard, IDU wired controller and IDU receive light board will display

Error judgment condition and method:

This is a status code of project debugging, not an error code. When IDU or ODU displays this code, it means the unit is under debugging status and the IDU cannot be operated.

Troubleshooting: ——

Possible reason:——

1.3.12 "L1" Indoor fan protection

Error display: IDU wired controller and IDU receive light board will display

Error judgment condition and method:

Check if the rotation speed of IDU is too slow, or it stops rotation, or protection signal of outdoor fan is transferred. If yes, it is judged that indoor fan protection occurs.

Possible reason:

- Motor stops operation or it is blocked
- IDU mainboard is abnormal

Troubleshooting:

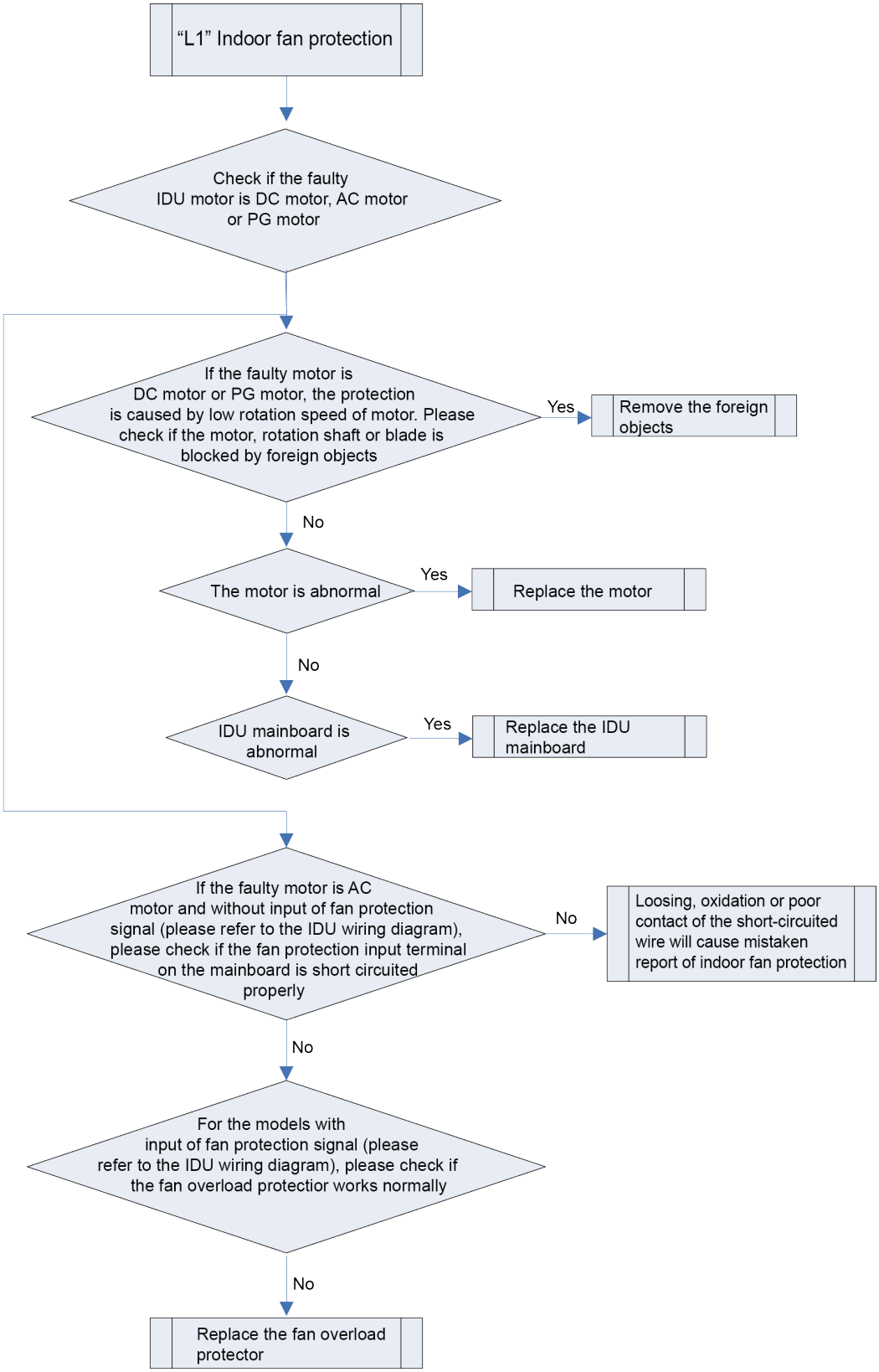

1.3.13 “L3” Water full protection

Error display: IDU wired controller and IDU receive light board will display

Error judgment condition and method:

Check the status of IDU float switch. When water level is too high, float switch is activated, so water full protection happens.

Possible reason:

- IDU is installed improperly
- Drainage pump is broken
- Float switch operates abnormally
- IDU mainboard is abnormal

Troubleshooting:

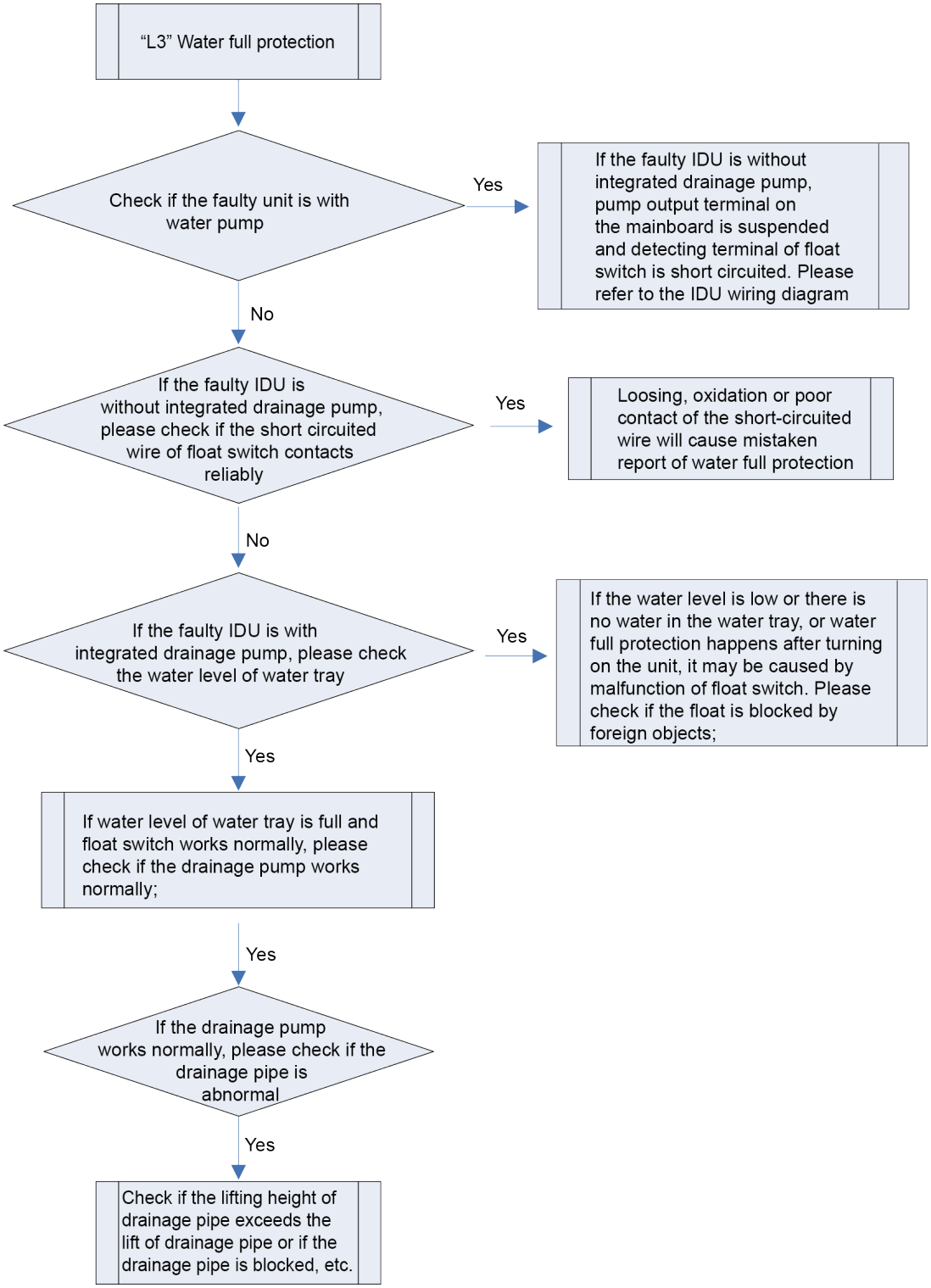

1.3.14 “L4” Power supply overcurrent protection

Error display: IDU wired controller and IDU receive light board will display

Error judgment condition and method:

Check if the power supply current from IDU to wired controller is normal. If power supply current is too big, it is judged that the current is abnormal.

Possible reason:

- Power supply conducting wire of wired controller is short circuited
- IDU mainboard is abnormal
- Mainboard of wired controller is abnormal

Troubleshooting:

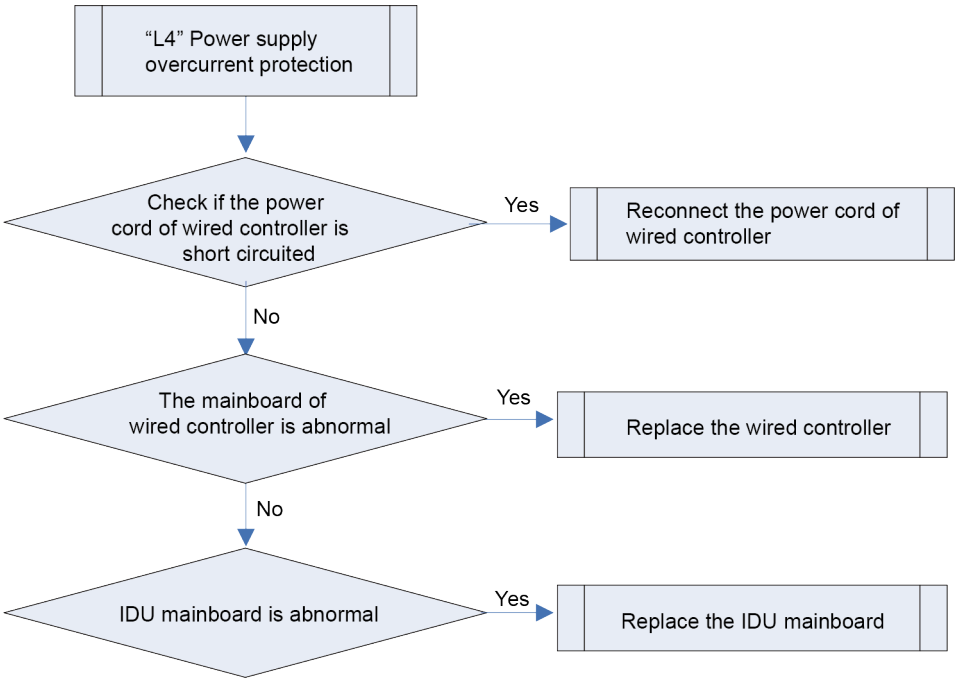

1.3.15 “L5” Freeze protection

Error display: IDU wired controller and IDU receive light board will display

Error judgment condition and method:

Check IDU pipe temperature. When pipe temperature is too low, freeze protection will be activated to prevent freezing damage of evaporator.

Possible reason:

- IDU filter and evaporator are dirty
- IDU motor is blocked
- Refrigerant amount is insufficient
- Ambient temperature of IDU and ODU is too low

Troubleshooting:

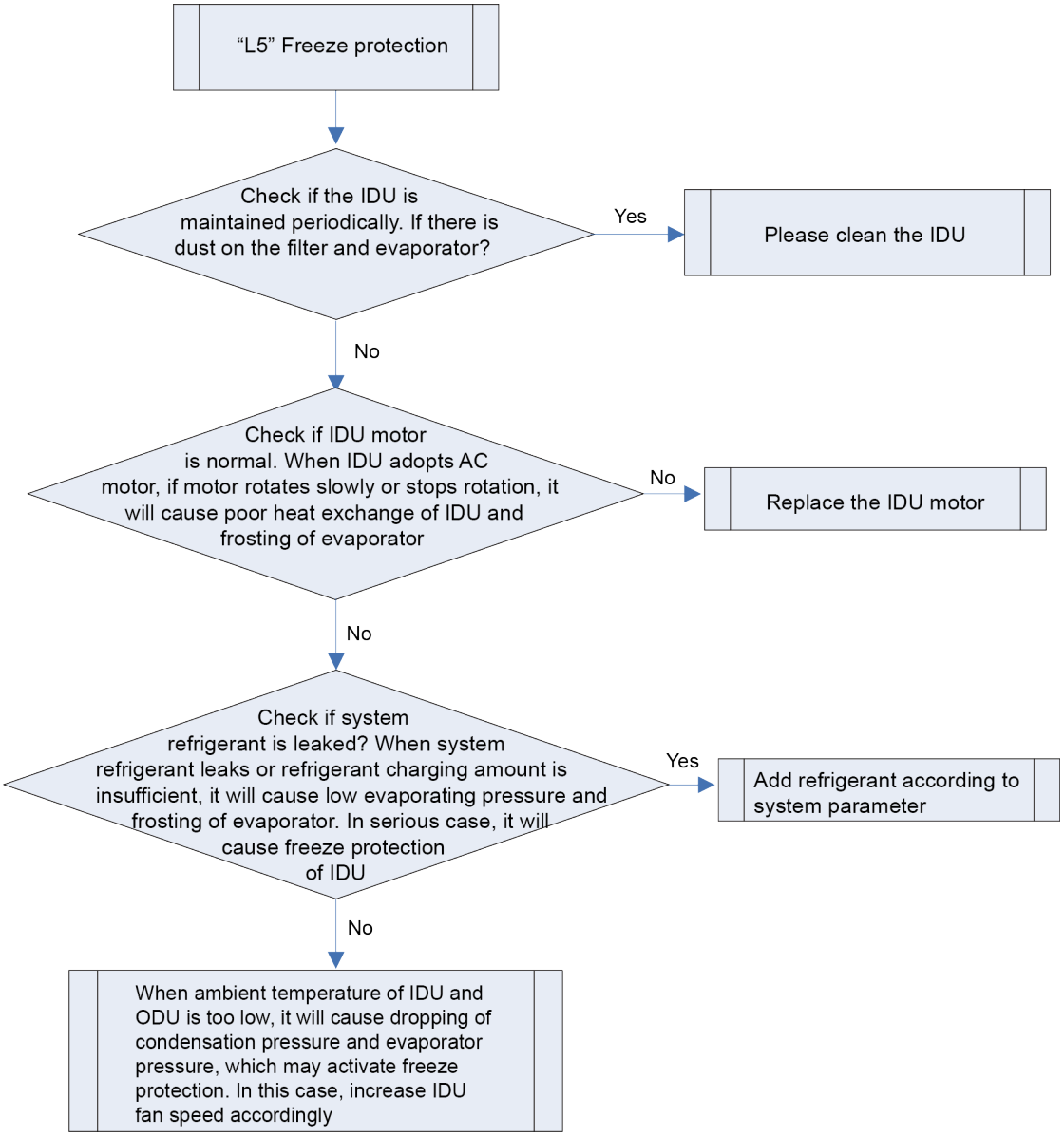

1.3.16 "L7" No master IDU

Error display: IDU wired controller and IDU receive light board will display

Error judgment condition and method:

No master IDU error will happen when there is no master IDU in the system

Possible reason:

- Master IDU is offline
- The mainboard of master IDU is replaced
- The mainboard of master IDU has error

Troubleshooting:

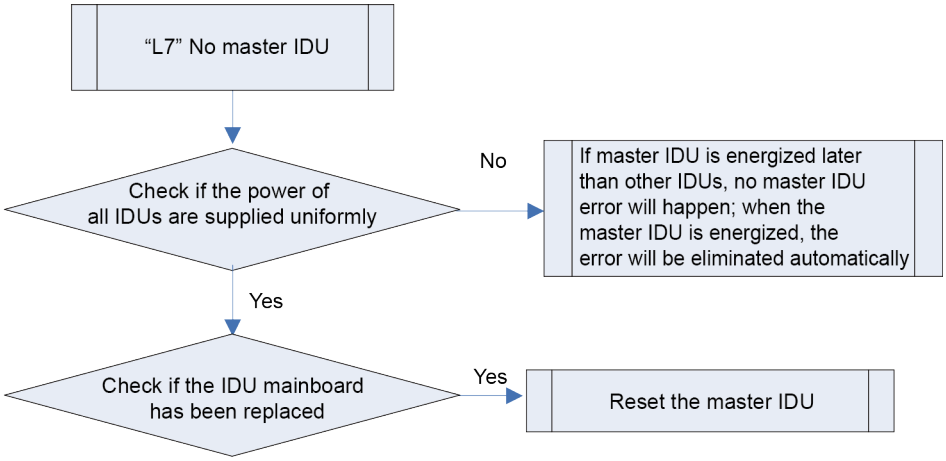

1.3.17 "L9" Group-controlled IDU quantity inconsistency

Error display: IDU wired controller and IDU receive light board will display

Error judgment condition and method:

If the IDU quantity connected with wired controller exceeds 16 sets or actually connected IDU quantity is inconsistent with the set group-controlled IDU quantity.

Possible reason:

- IDU quantity connected with one wired controller exceeds 16 sets;
- Actually connected IDU quantity is inconsistent with the set group-controlled IDU quantity.

Troubleshooting:

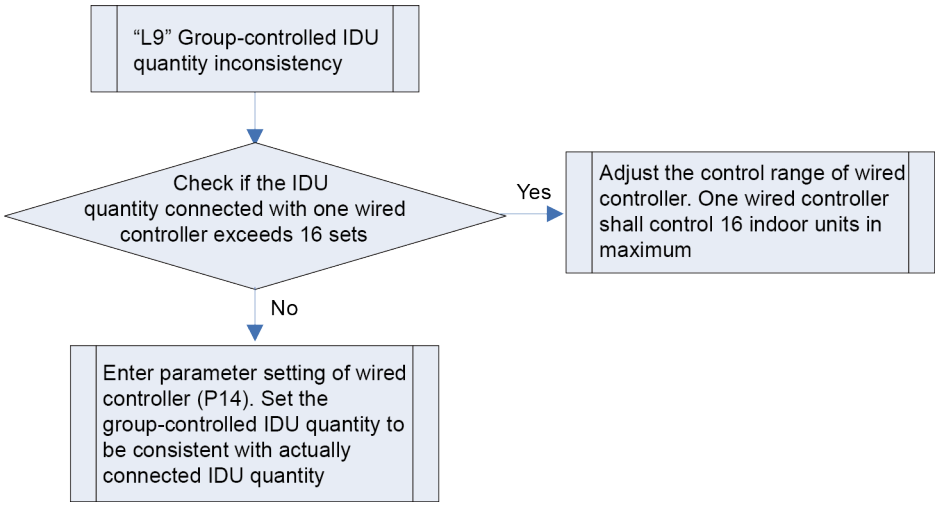

1.3.18 "LA" Group-controlled IDU series inconsistency

Error display: IDU wired controller and IDU receive light board will display

Error judgment condition and method:

Wired controller detects that the IDUs connected with itself belong to different series.

Possible reason:

- IDUs connected with one wired controller belong to different series

Troubleshooting:

Make sure the IDUs connected with one wired controller belong to the same series.

1.3.19 “LC” Mismatch of IDU and ODU models

Error display: IDU wired controller and IDU receive light board will display

Error judgment condition and method:

When some IDUs or devices which cannot be identified by some ODUs are installed in the system, mismatch error of IDU and ODU models will occur.

Possible reason:

- Mismatch of IDU and ODU

Troubleshooting:

When some IDUs or devices which cannot be identified by some ODUs are installed in the system (E.g. floor heating device is installed in modular DC inverter multiple VRF system), the error will occur. Please remove the relevant IDU devices or replace the ODU with suitable model.

2 After-sales Emergency Masures

When some unrecoverable fault occurs to one module which is connected with several others in parallel, the following emergency measures are recommended to guarantee the heating or cooling capacity of the indoor units and the service life of modules except the faulted one are not affected.

Step 1: set all indoor units under “Off” mode and cut off the power supply to the indoor and outdoor units.

Step 2: shut off all cutoff valves of the faulted outdoor unit, including the cutoff valves of the liquid/gas pipe as well as the oil balancing valve.

Step 3: cut off the air switch of the module.

Step 4: remove the communication line between the faulted module and other modules which are still kept connected through the communication line.

Step 5: readjust the address and quantity settings on the main board of the modules except the faulted one.

Step 6: power and restart the unit.

3 Wiring Diagram

NOTICE! This drawing is just for reference; please always refer to the electric wiring stuck to the unit for actual wiring.

3.1 Low Static Pressure Duct Type Indoor Unit

Model: GMV-ND07PLS/A-T(U) ~ GMV-ND22PLS/A-T(U)

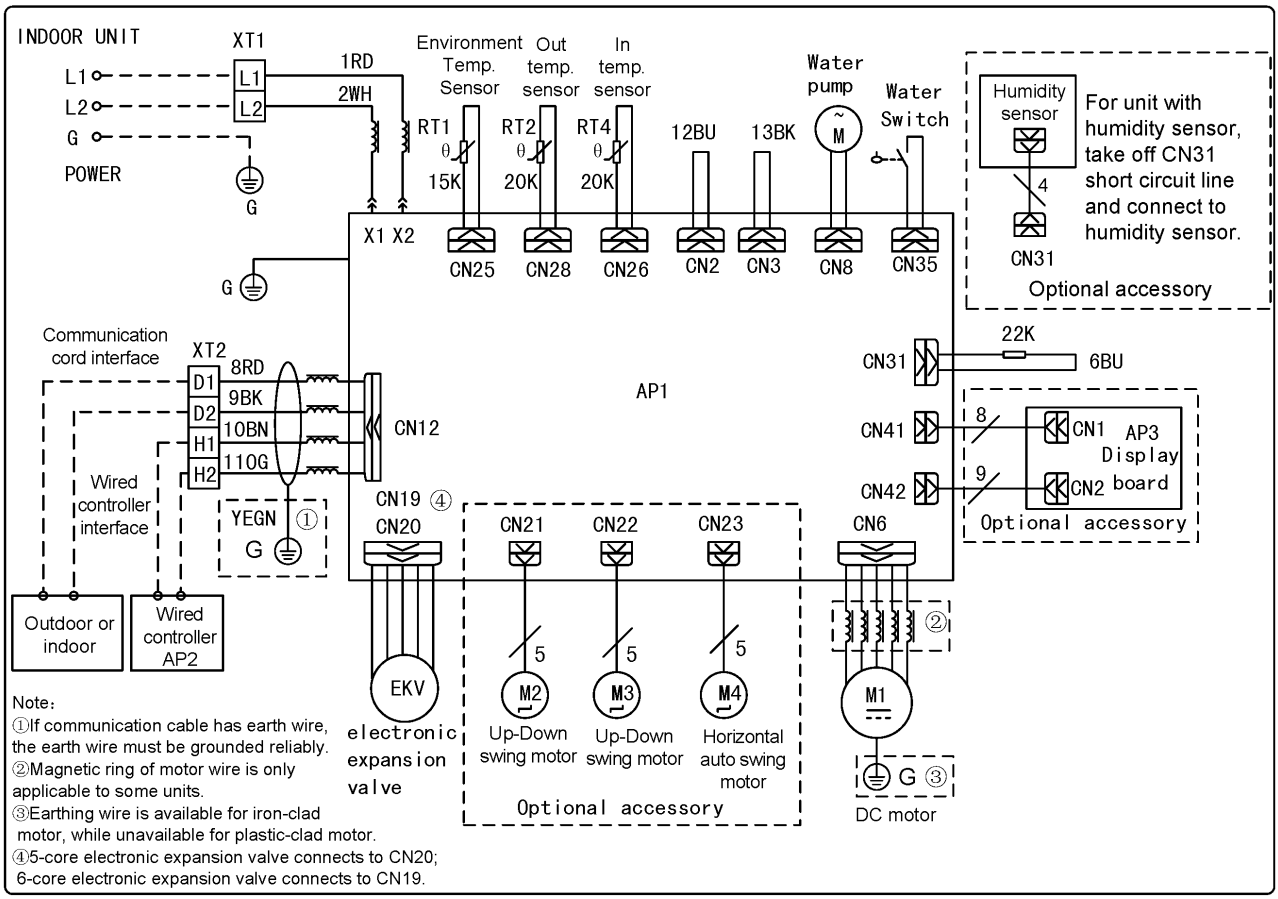

Model:GMV-ND05PLS/B1-T(U) ~ GMV-ND24PLS/B1-T(U)

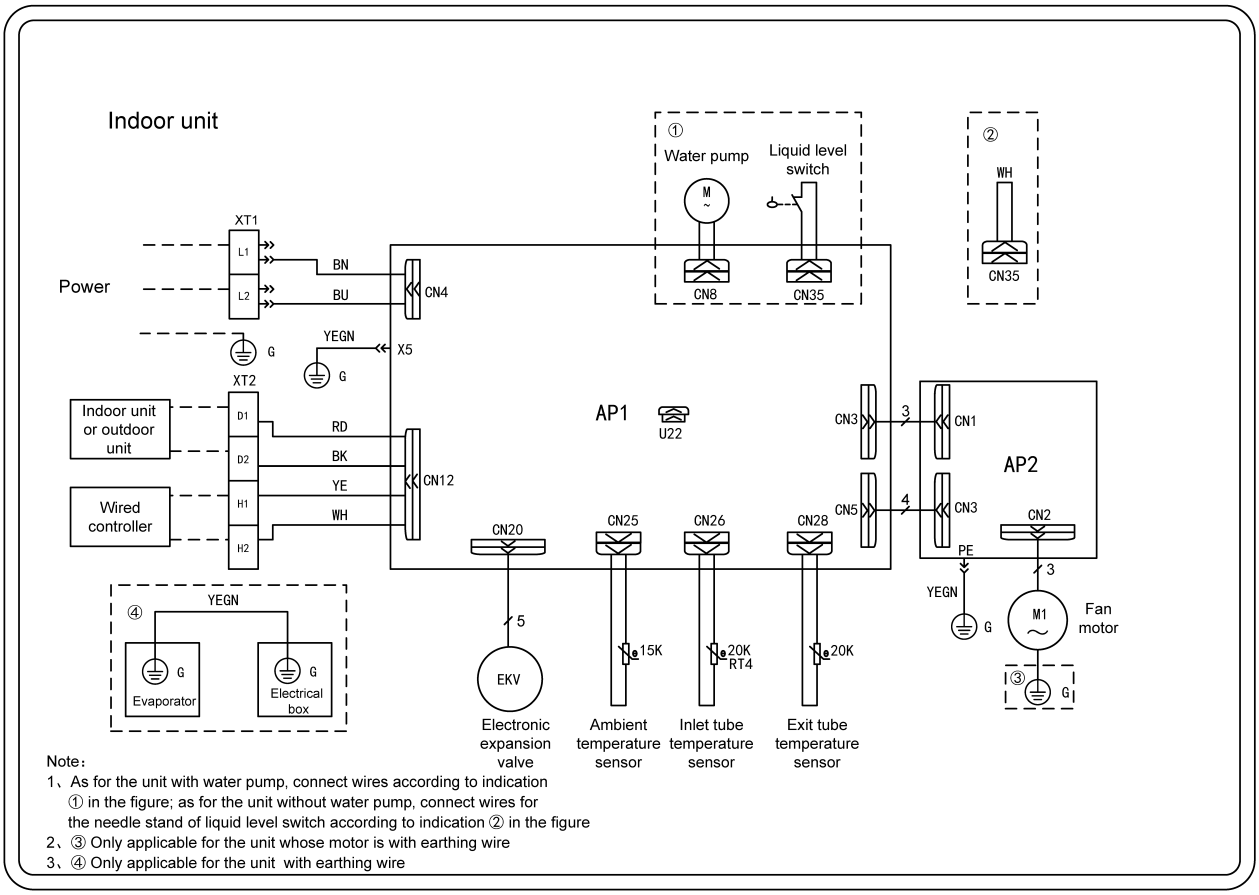

Note:
1、As for the unit with water pump, connect wires according to indication ① in the figure; as for the unit without water pump, connect wires for the needle stand of liquid level switch according to indication ② in the figure
2、③ Only applicable for the unit whose motor is with earthing wire
3、④ Only applicable for the unit with earthing wire

3.2 Slim Duct Type Indoor Unit

Model: GMV-ND06PLS/B-T(U) ~ GMV-ND24PLS/B-T(U)

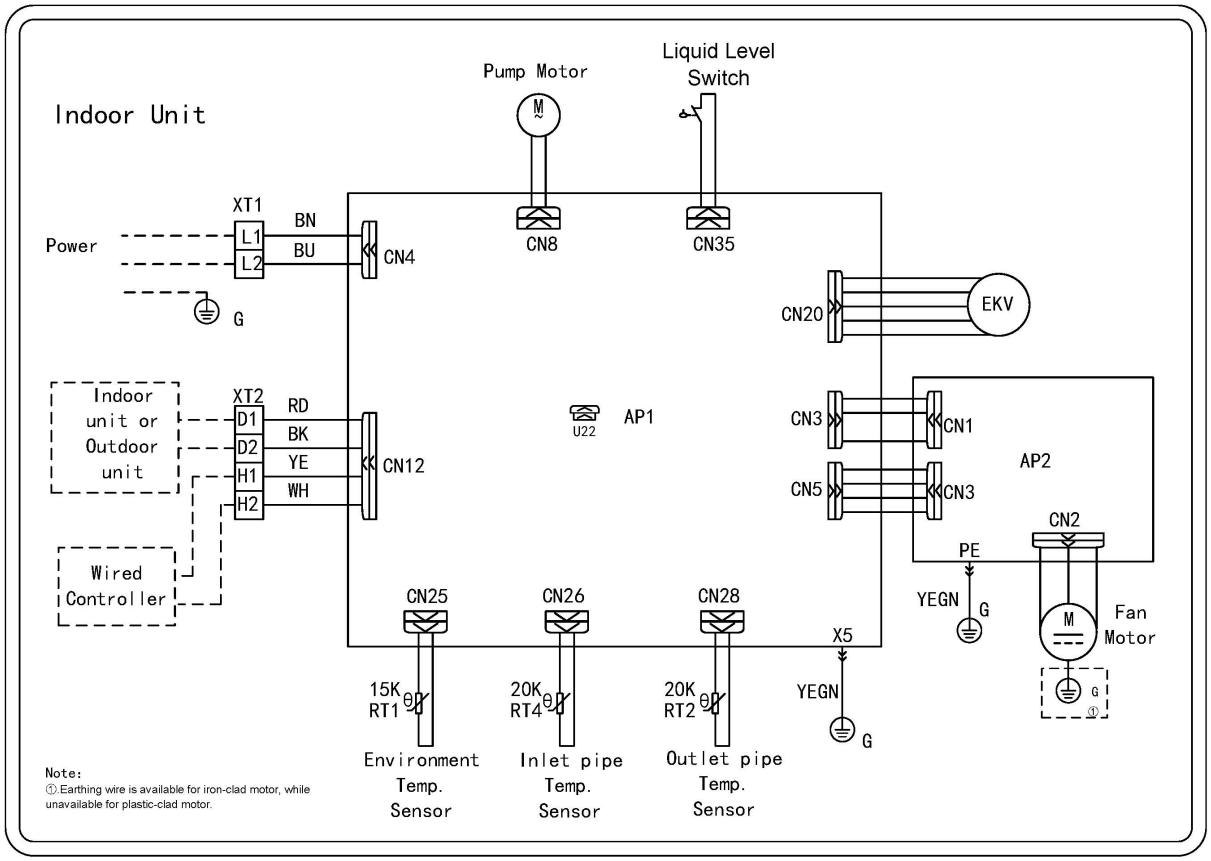

3.3 Four-way Cassette Type Indoor Unit

Model: GMV-ND07T/A-T(U) ~ GMV-ND48T/A-T(U)

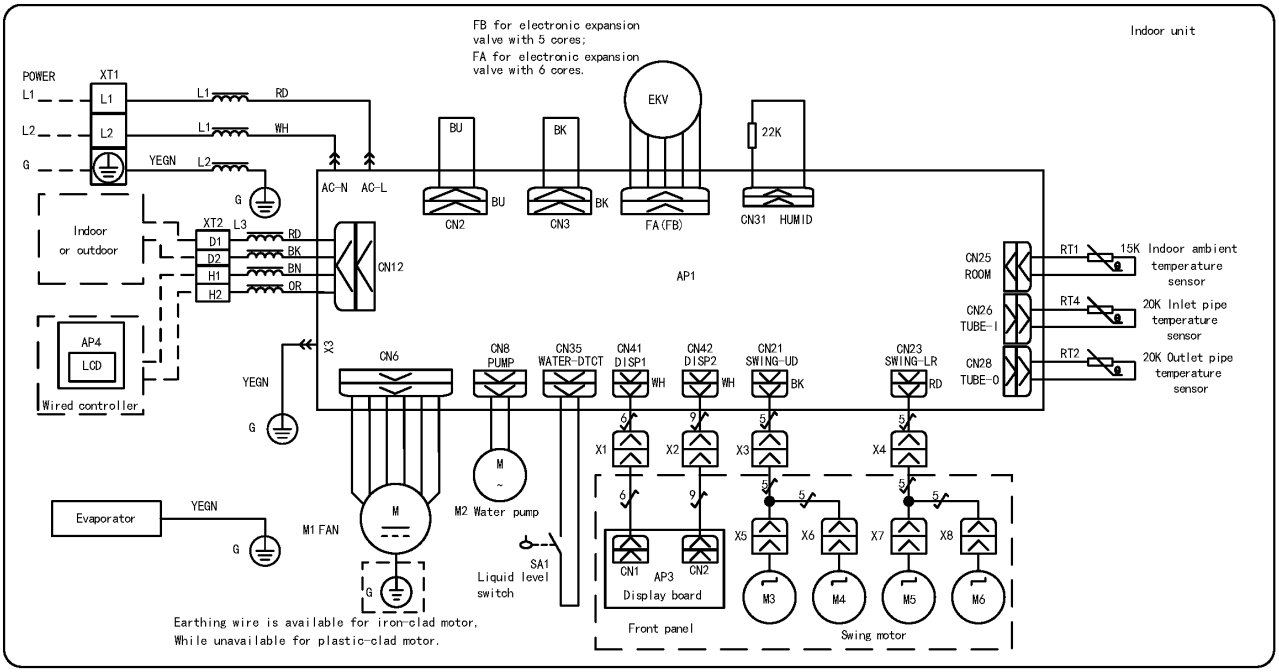

3.4 Wall Mounted Type Indoor Unit

Model: GMV-N07G/A3A-D(U) ~ GMV-N24G/A3A-D(U);

GMV-N07G/E3A-D(U)~ GMV-N24G/E3A-D(U):

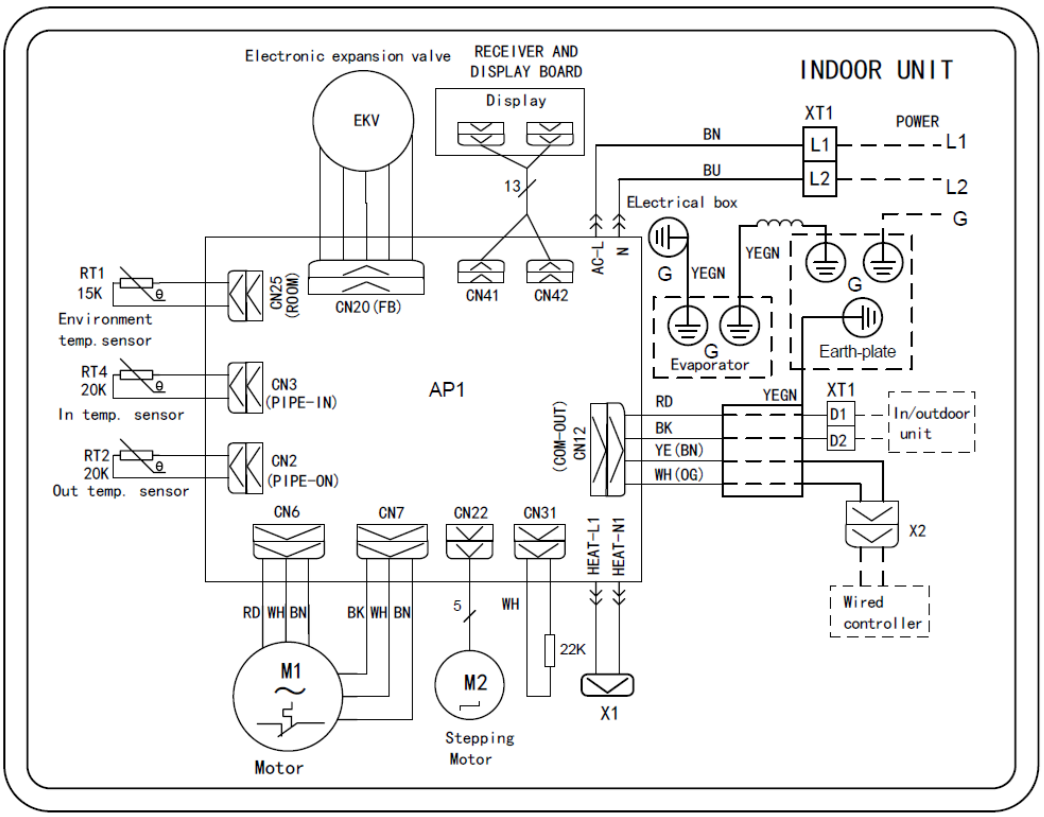

Model: GMV-ND06G/B4B-T(U) ~ GMV-ND24G/B4B-T(U):

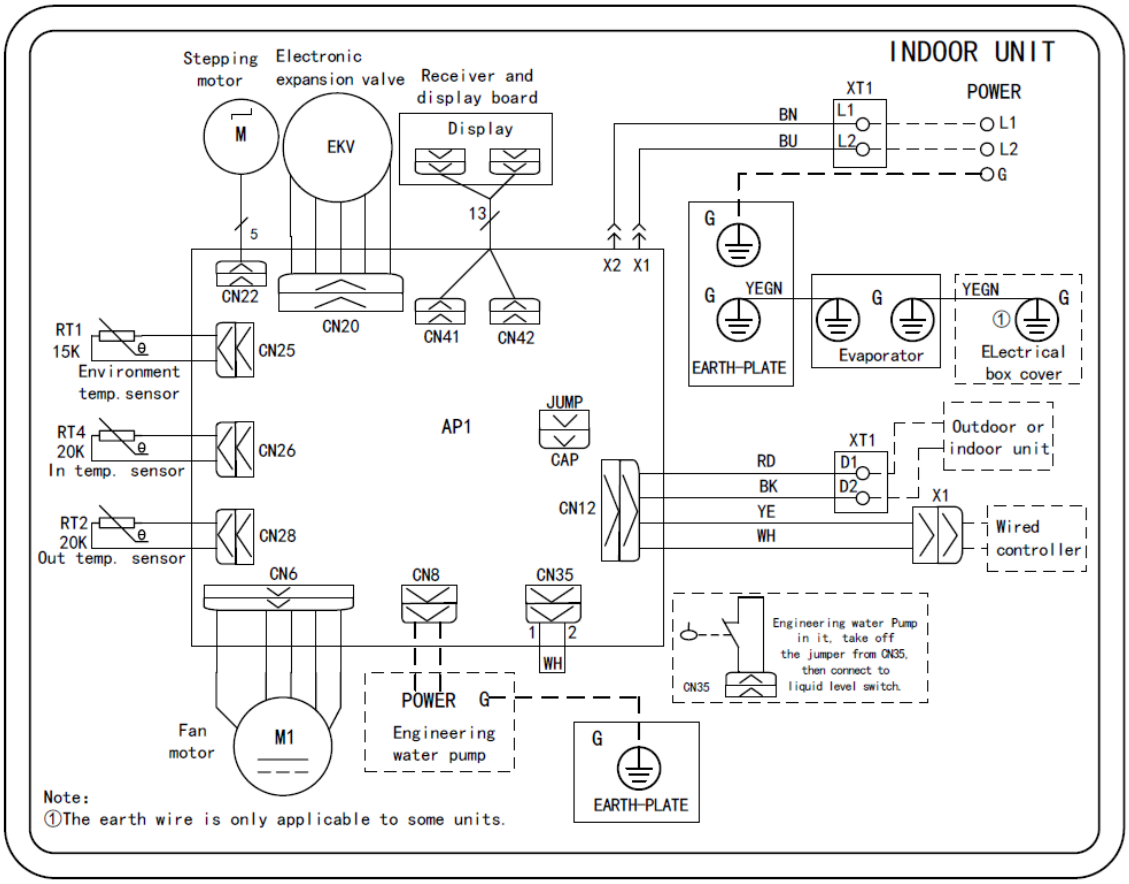

Model: GMV-ND30G/B4B-T(U), GMV-ND36G/B4B-T(U):

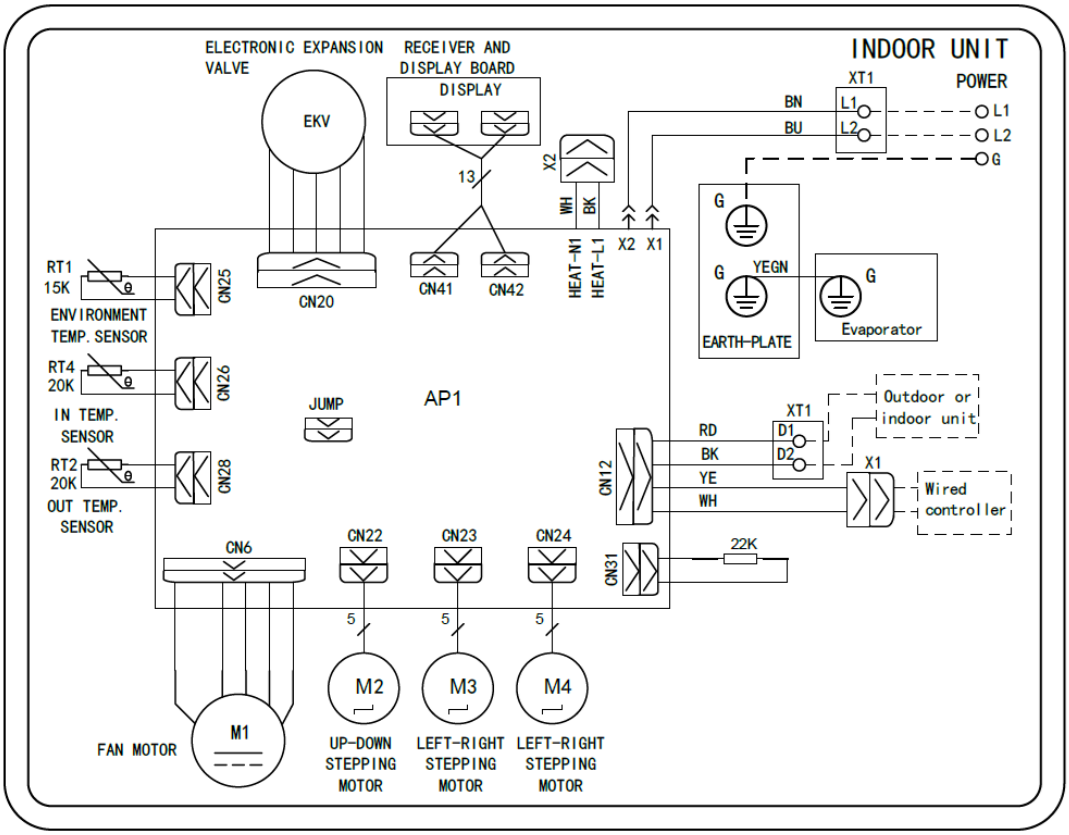

3.5 Console Type Indoor Unit

Model: GMV-ND07C/A-T(U) ~ GMV-ND18C/A-T(U):

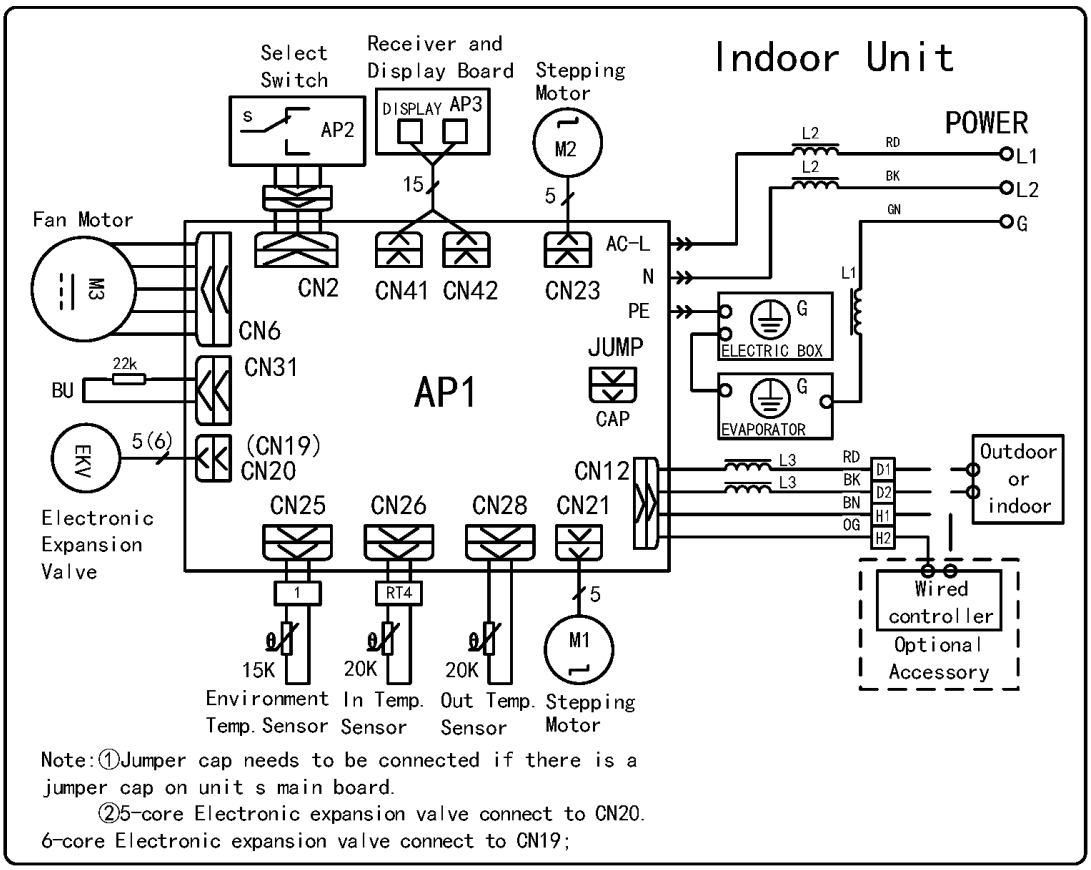

3.6 High Static Pressure Duct Type Indoor Unit

Model: GMV-ND18PHS/A-T(U) ~ GMV-ND48PHS/A-T(U)

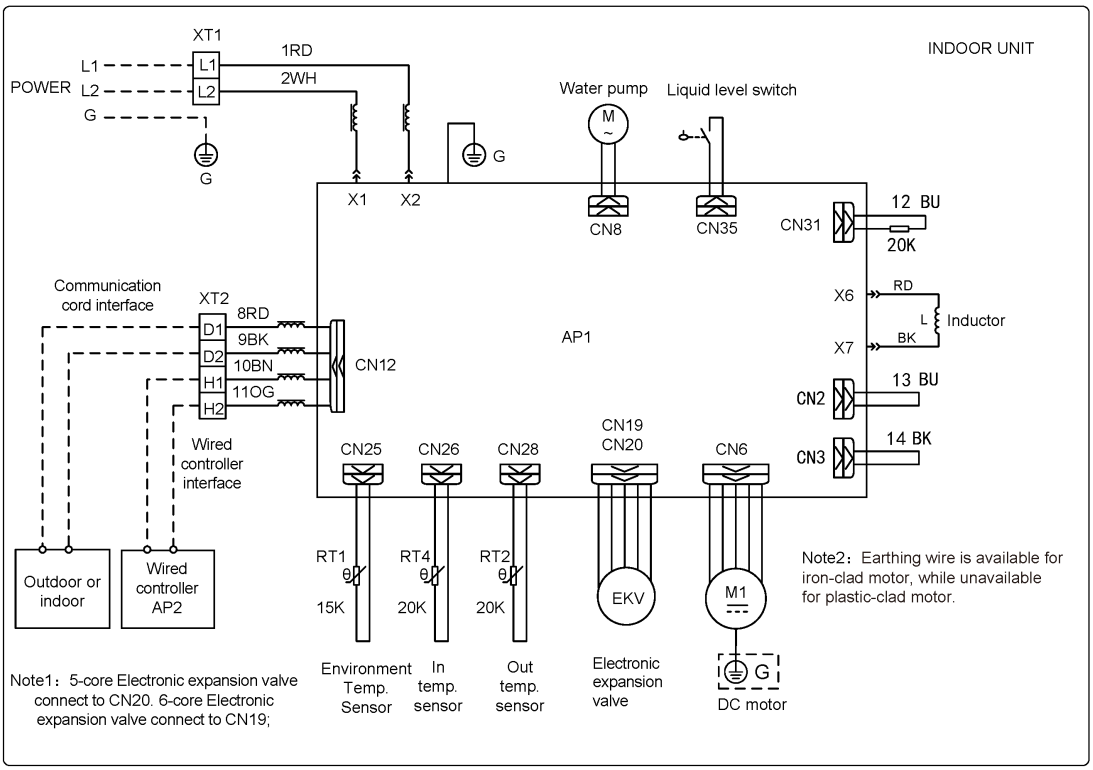

Model: GMV-ND72PH/A-T(U) / GMV-ND96PH/A-T(U)

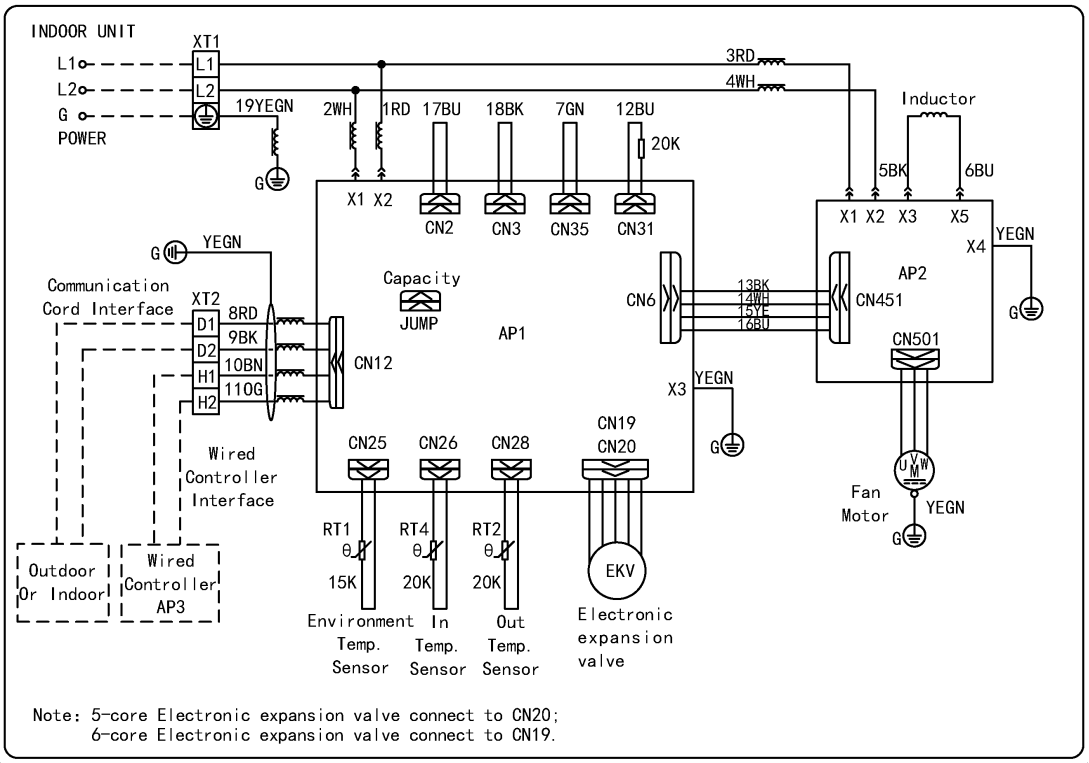

3.7 Two-way Cassette Type Indoor Unit

Model: GMV-ND09TS/A-T(U) ~ GMV-ND24TS/A-T(U)

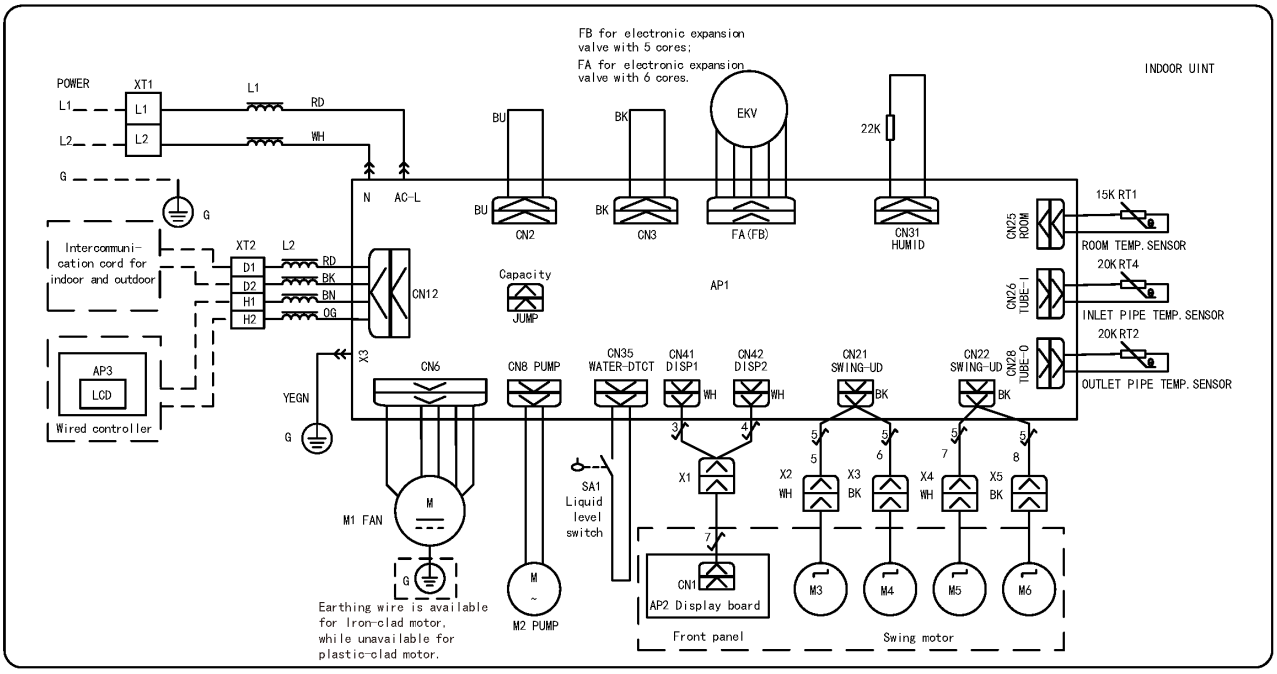

Model: GMV-ND09TS/B-T(U) ~ GMV-ND24TS/B-T(U)

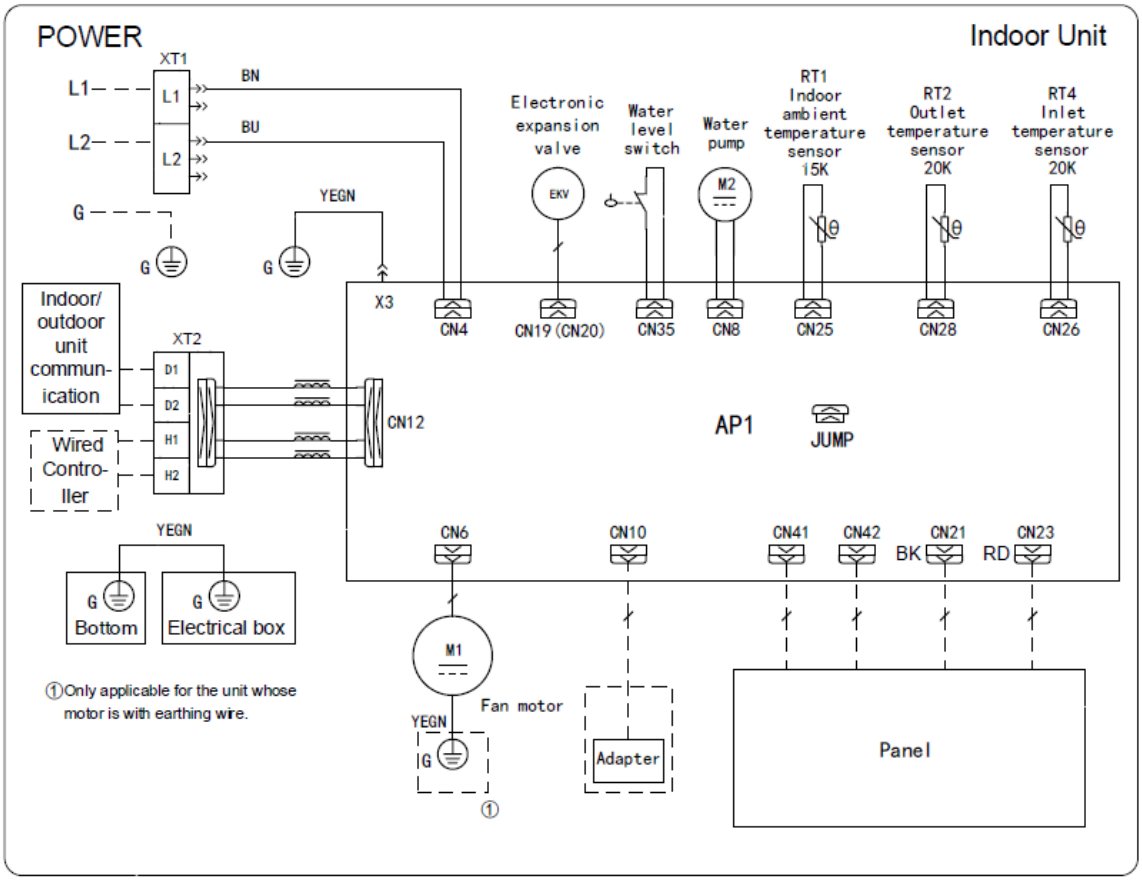

3.8 Floor Ceiling Type Indoor Unit

Model: GMV-ND09ZD/A-T(U) ~ GMV-ND48ZD/A-T(U)

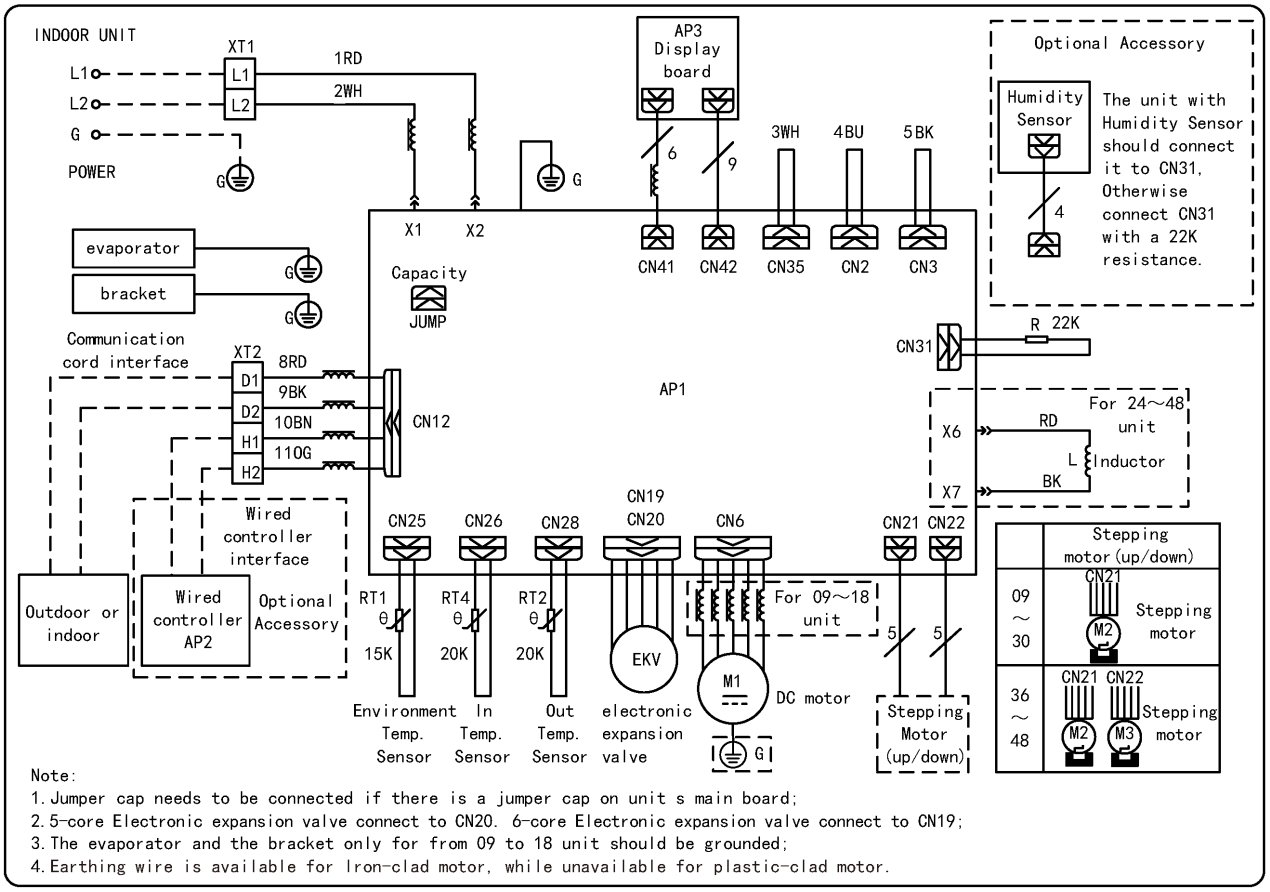

3.9 Fresh Air Processing Indoor Unit

Model: GMV-NDX42P/A-T(U) / GMV-NDX48P/A-T(U)

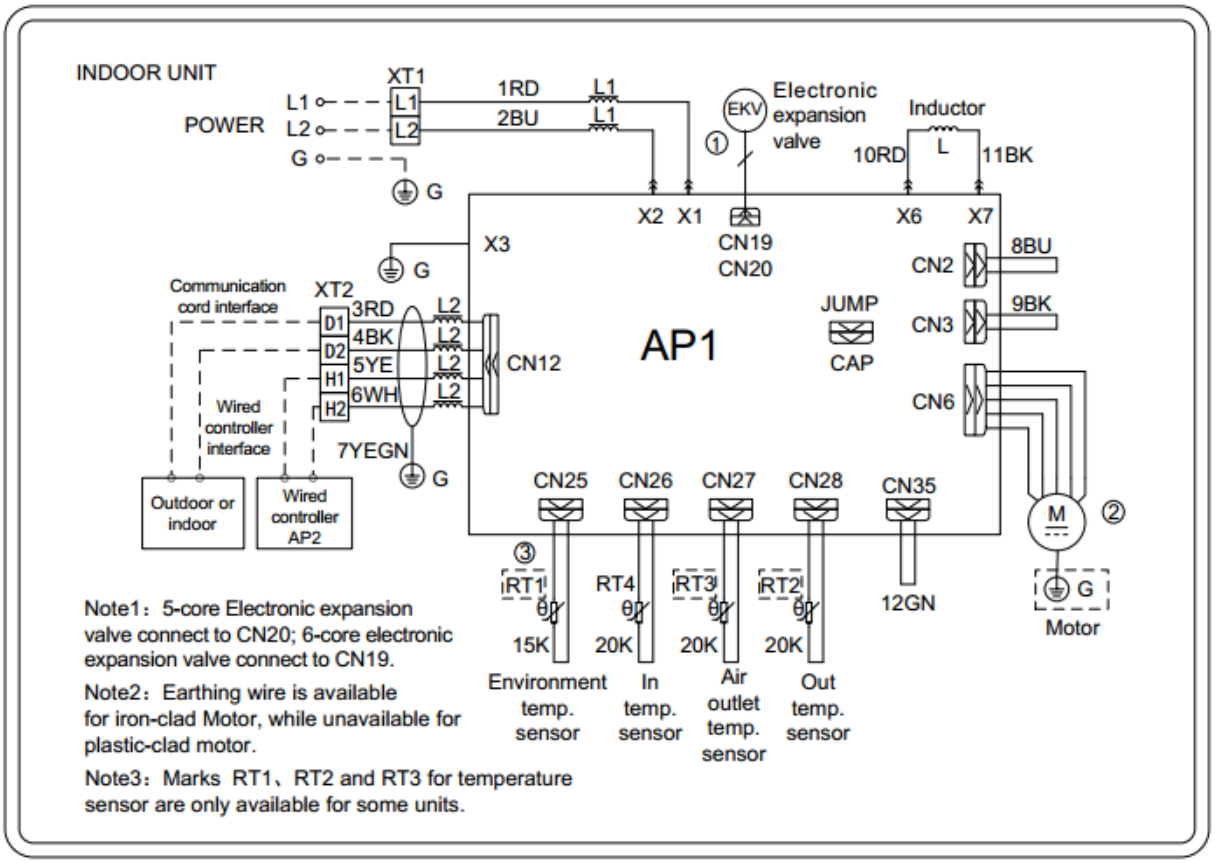

Model: GMV-NDX54P/A-T(U) / GMV-NDX72P/A-T(U) / GMV-NDX96P/A-T(U)

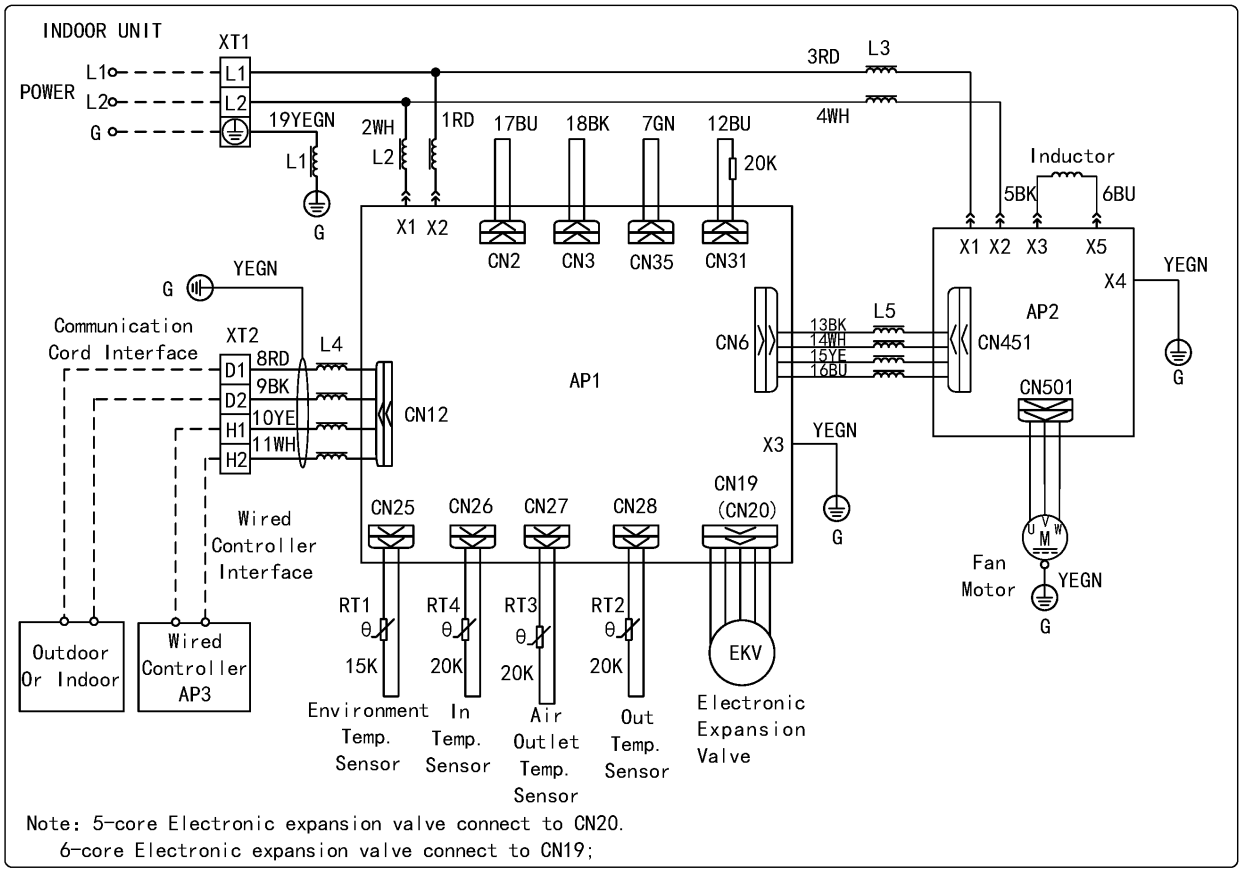

3.10 Compact Four-way Cassette Type Indoor Unit

Model: GMV-ND07T/B-T(U) ~ GMV-ND18T/B-T(U)

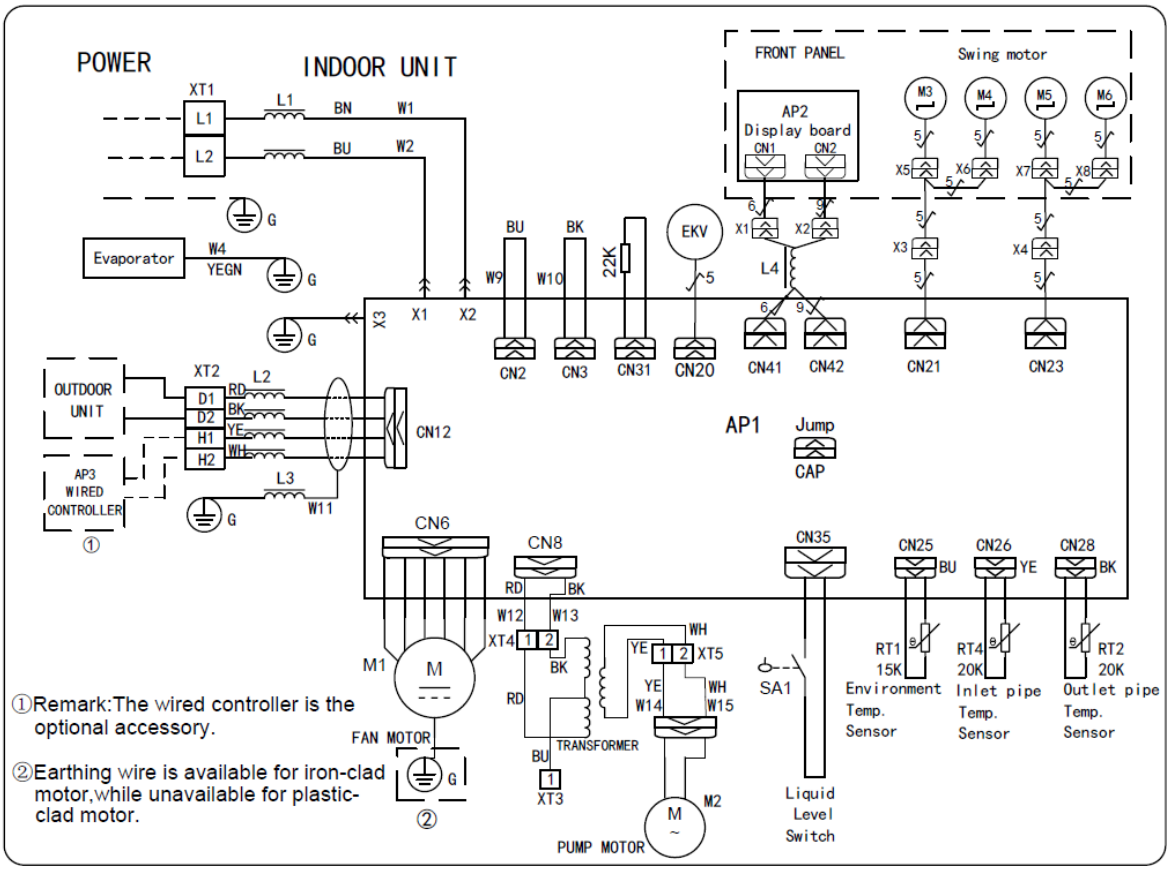

3.11 Super High Static Pressure Duct Type Indoor Unit

Model: GMV-ND07PHS/B-T(U) ~ GMV-ND24PHS/B-T(U)

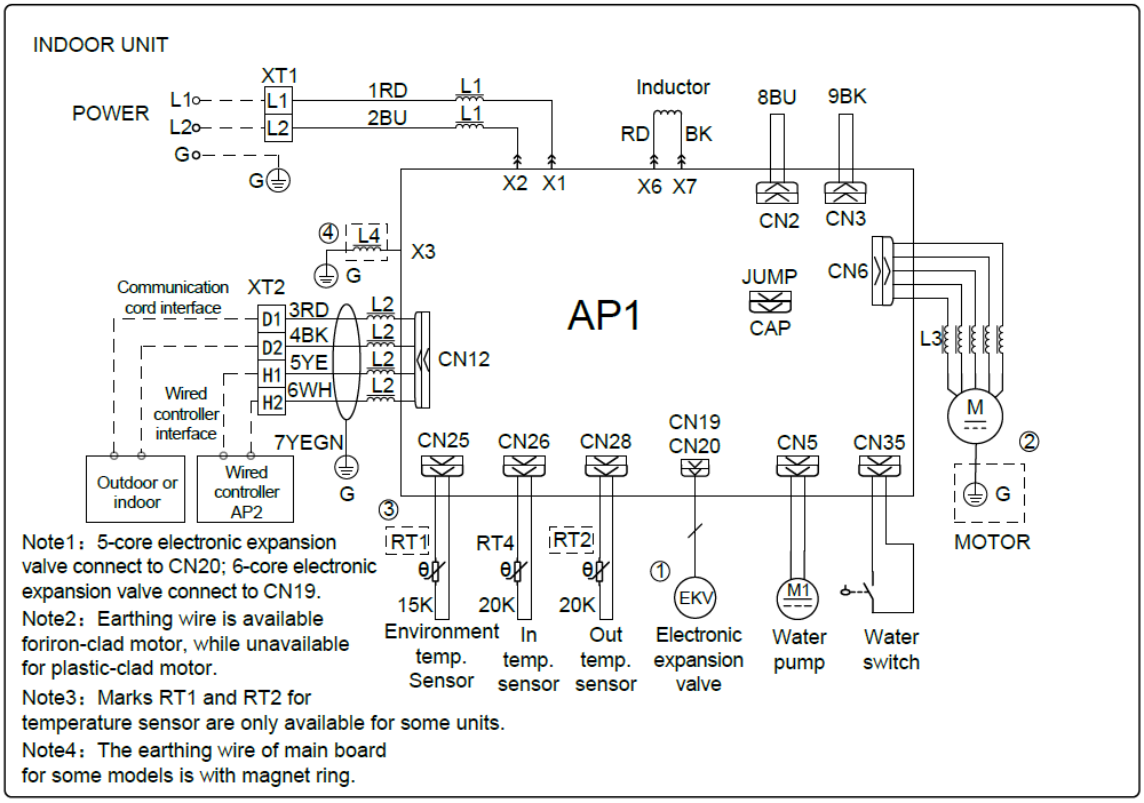

Model: GMV-ND30PHS/B-T(U) ~ GMV-ND42PHS/B-T(U)

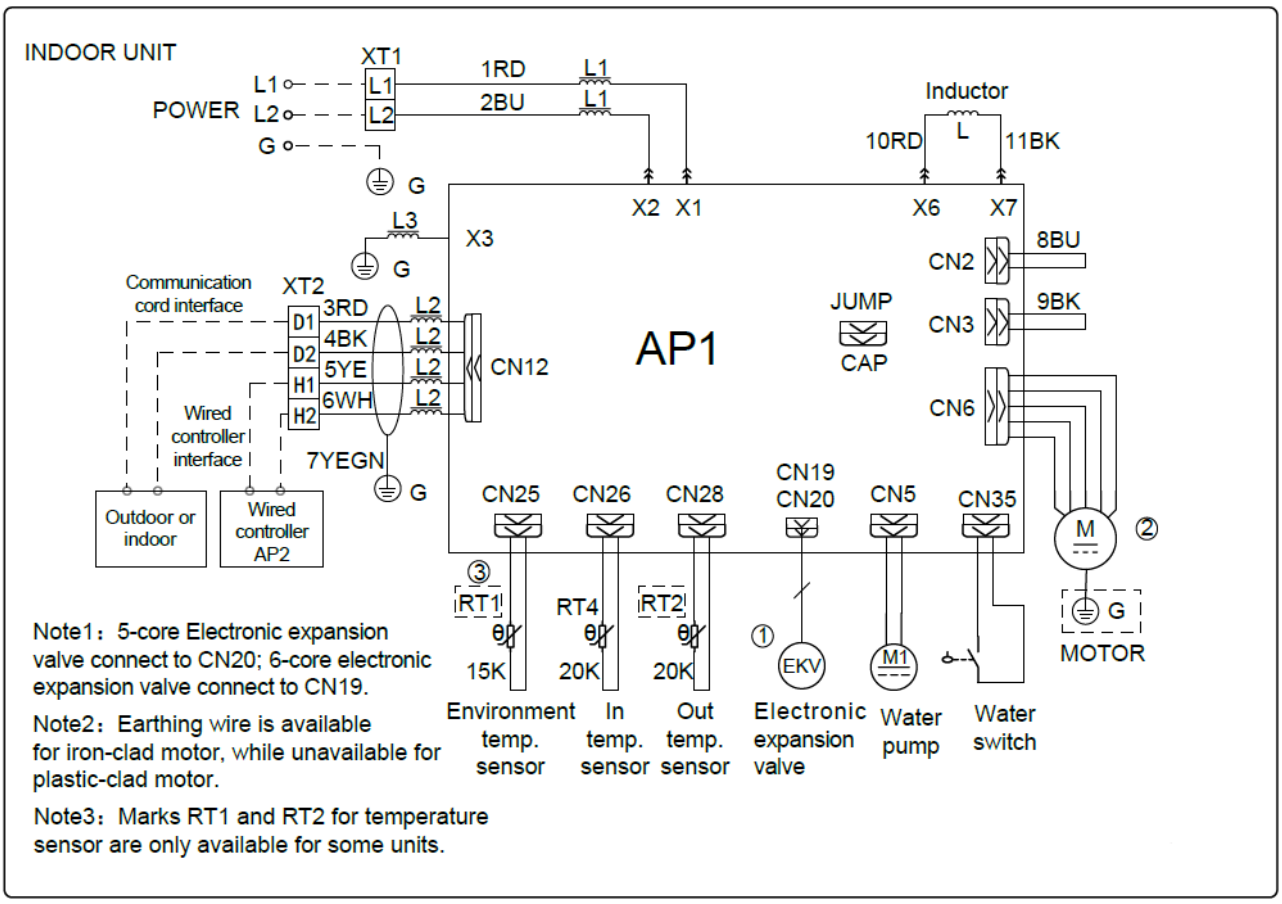

Model: GMV-ND48PHS/B-T(U) ~ GMV-ND54PHS/B-T(U)

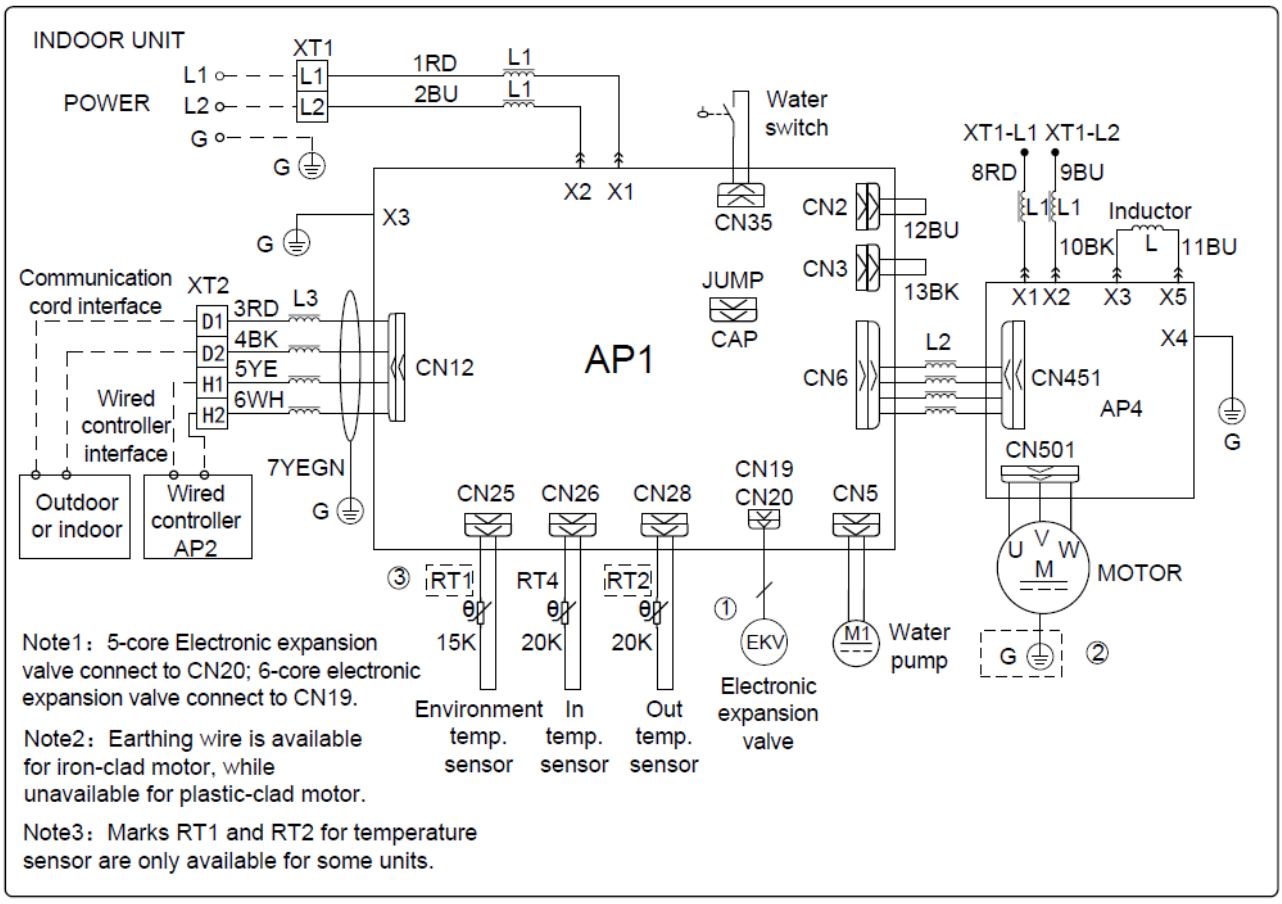

Model: GMV-ND72PH/B-T(U) / GMV-ND96PH/B-T(U)

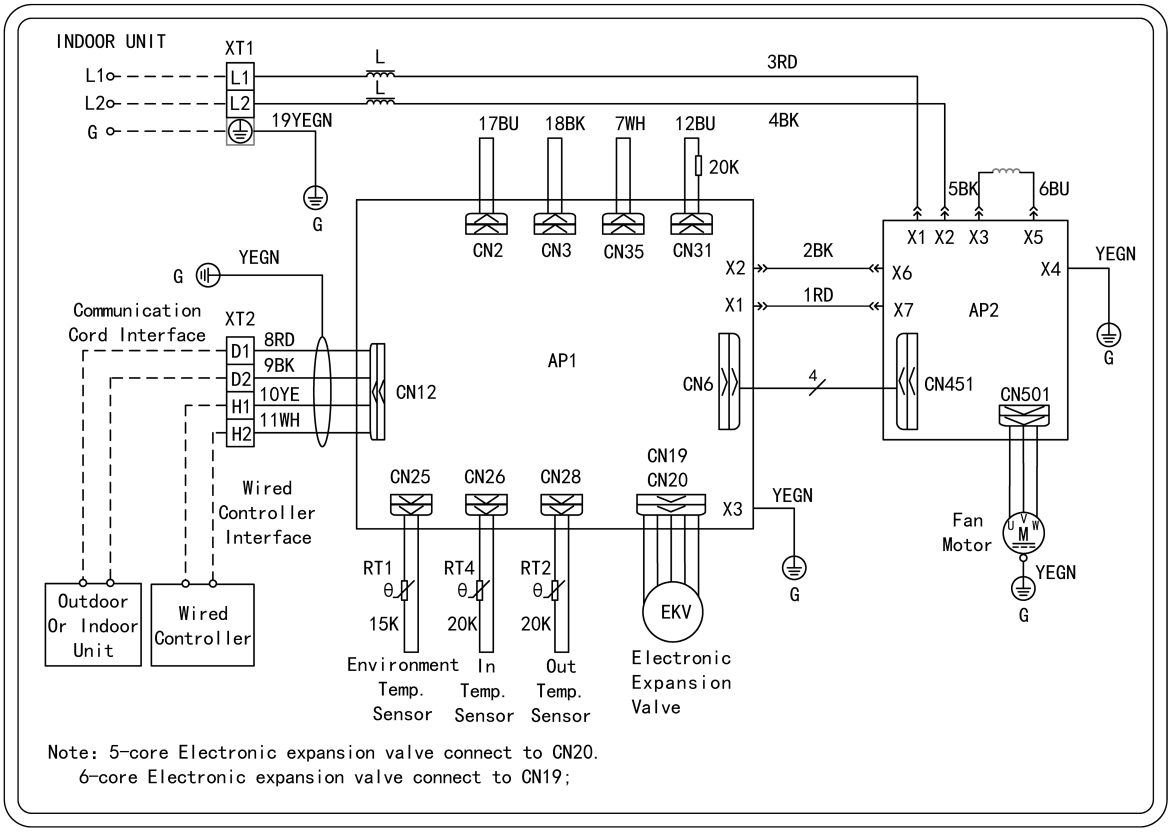

3.12 Air Handler type Indoor Unit

GMV-NDA/A-T(U):** GMV-ND09A/A-T(U) / GMV-ND12A/A-T(U) / GMV-ND18A/A-T(U) / GMV-ND24A/A-T(U) / GMV-ND30A/A-T(U) / GMV-ND36A/A-T(U) / GMV-ND42A/A-T(U) / GMV-ND48A/A-T(U) / GMV-ND54A/A-T(U)

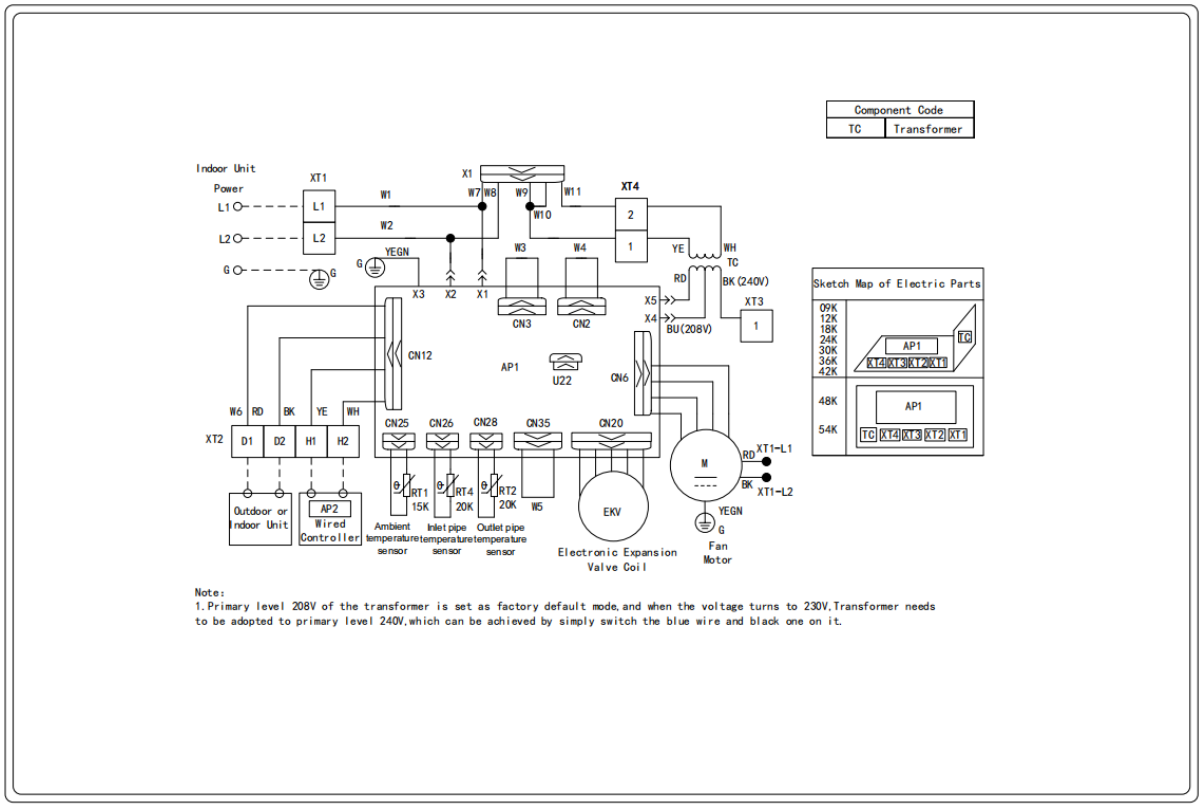

GMV-NDA/B-T(U):**

GMV-ND09A/B-T(U) / GMV-ND12A/B-T(U) / GMV-ND18A/B-T(U) / GMV-ND24A/B-T(U) / GMV-ND30A/B-T(U):

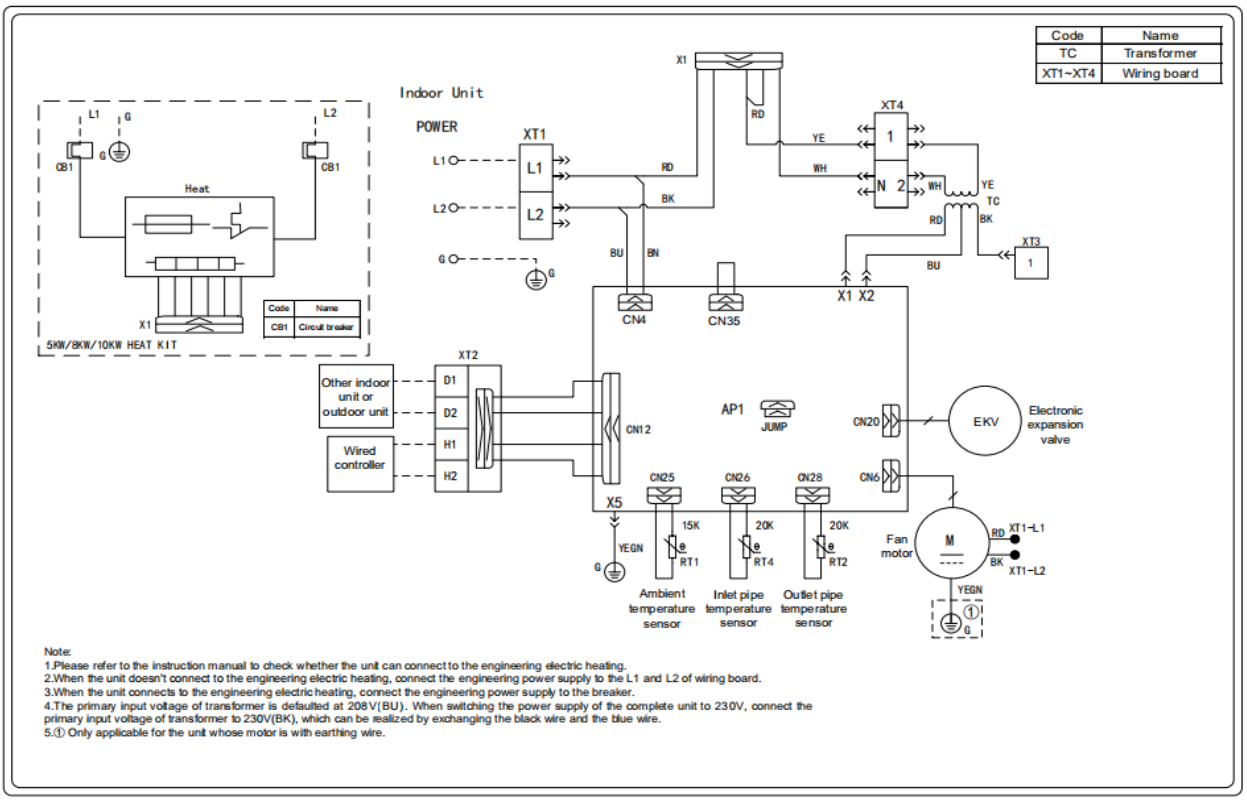

GMV-ND36A/B-T(U) / GMV-ND42A/B-T(U) / GMV-ND48A/B-T(U) / GMV-ND54A/B-T(U) / GMV-ND60A/B-T(U):

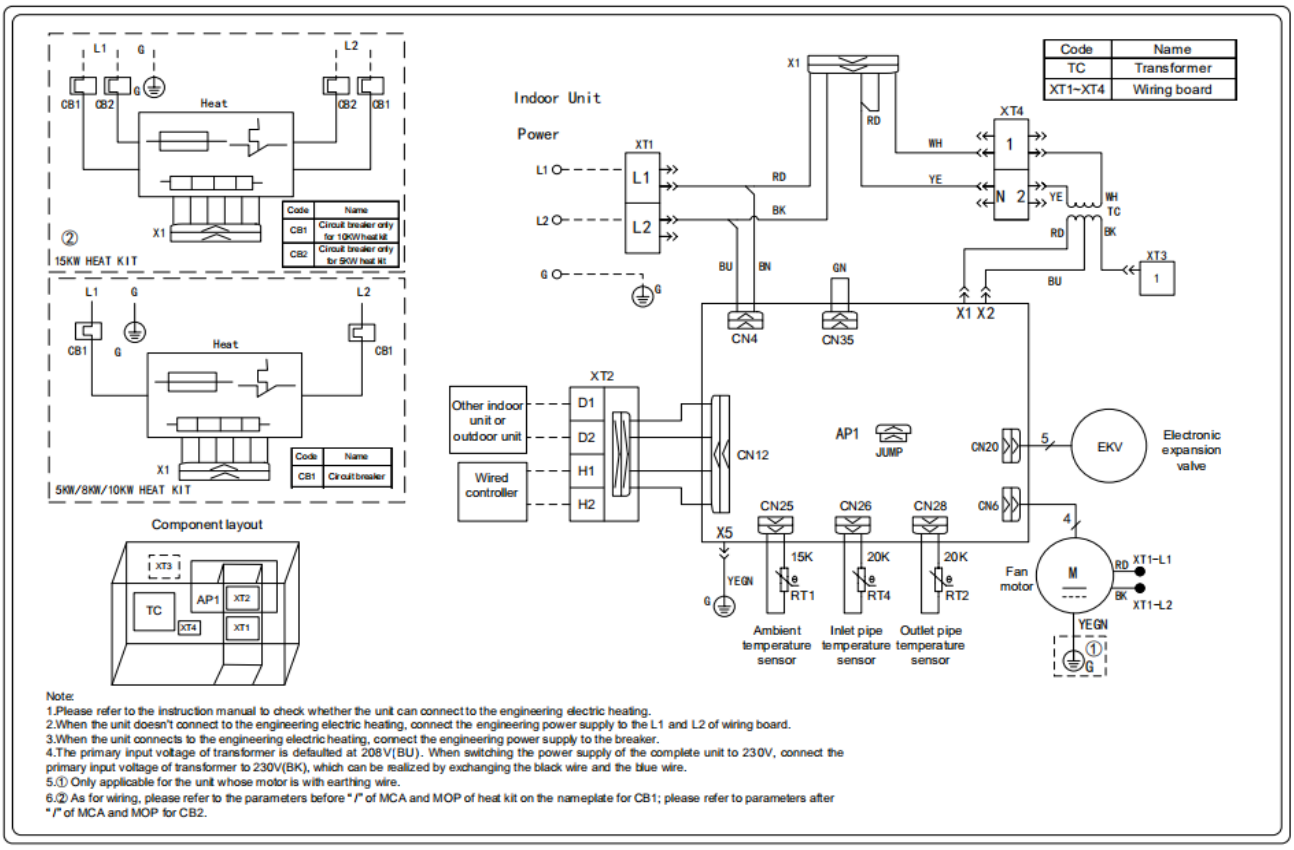

3.13 AHU-KIT

Model: GMV-N12U/A-T(U) / GMV-N24U/A-T(U) / GMV-N48U/A-T(U) / GMV-N96U/A-T(U) / GMV-N192U/A-T(U)

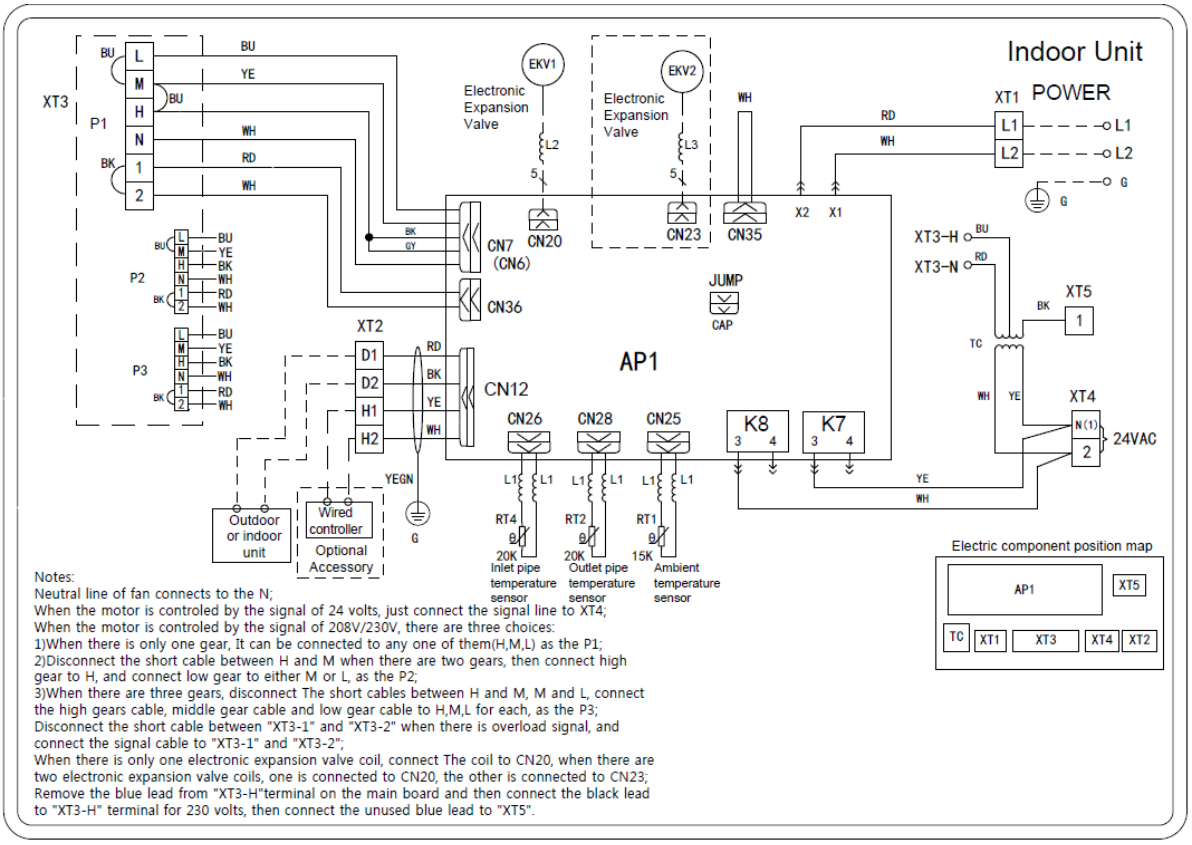

Model: GMV-N12U/C-T(U) / GMV-N24U/C-T(U) / GMV-N48U/C-T(U) / GMV-N96U/C-T(U) / GMV-N192U/C-T(U)

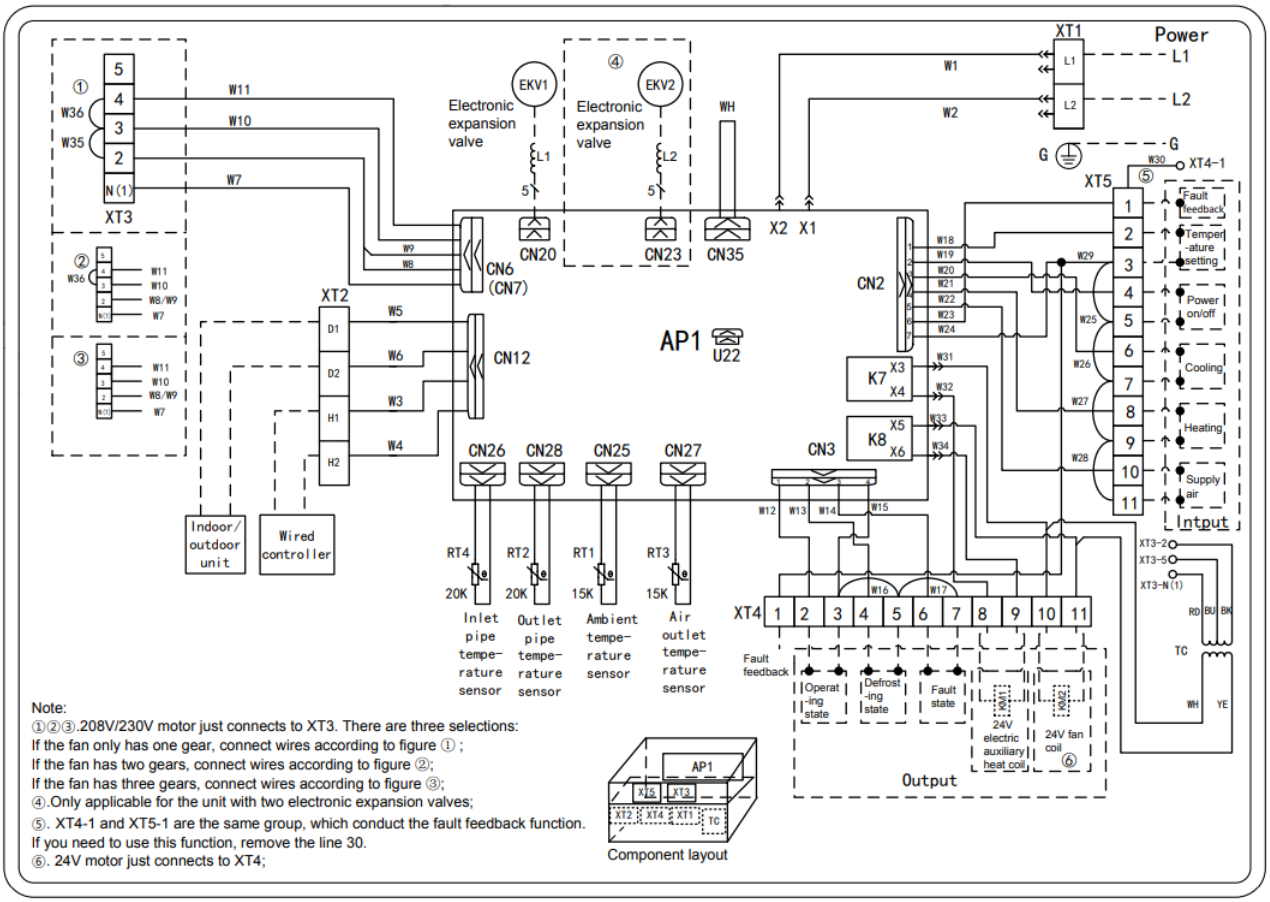

3.14 1-way Cassette Type Indoor Unit

Model: GMV-ND07TD/A-T(U) / GMV-ND09TD/A-T(U) / GMV-ND12TD/A-T(U)

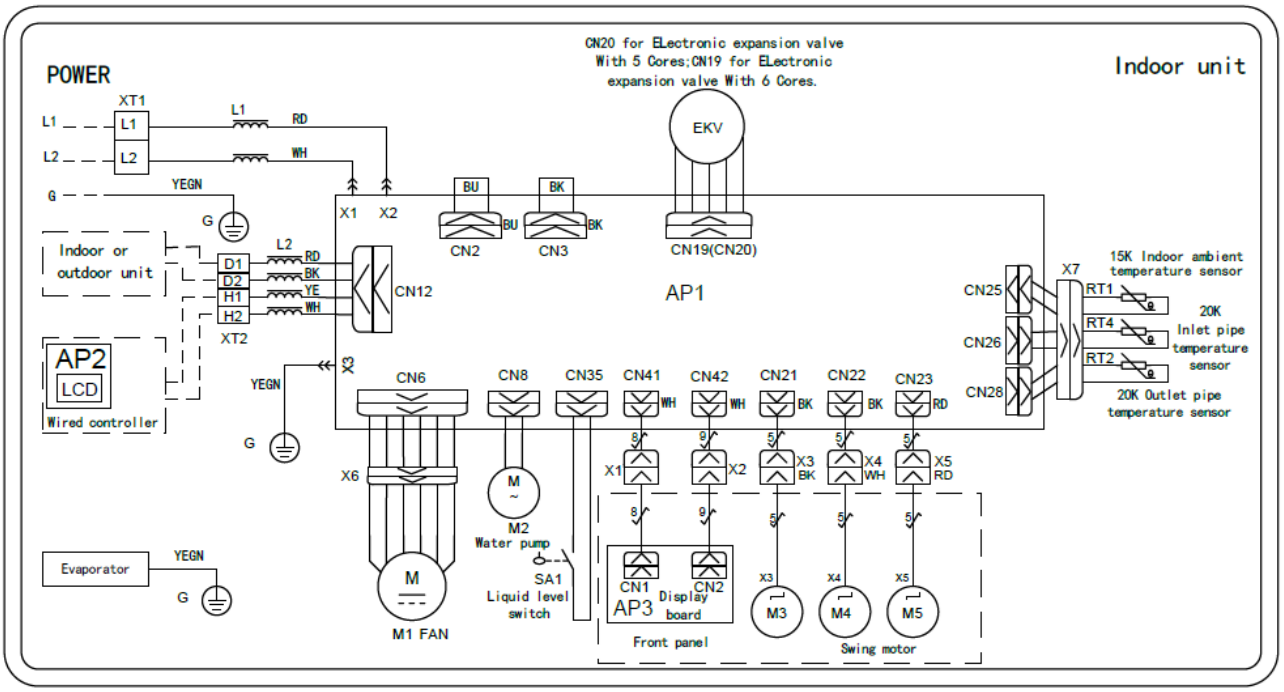

3.15 General Static Pressure Duct Type Indoor Unit

Model: GMV-ND30PLS/C-T(U) ~ GMV-ND48PLS/C-T(U)

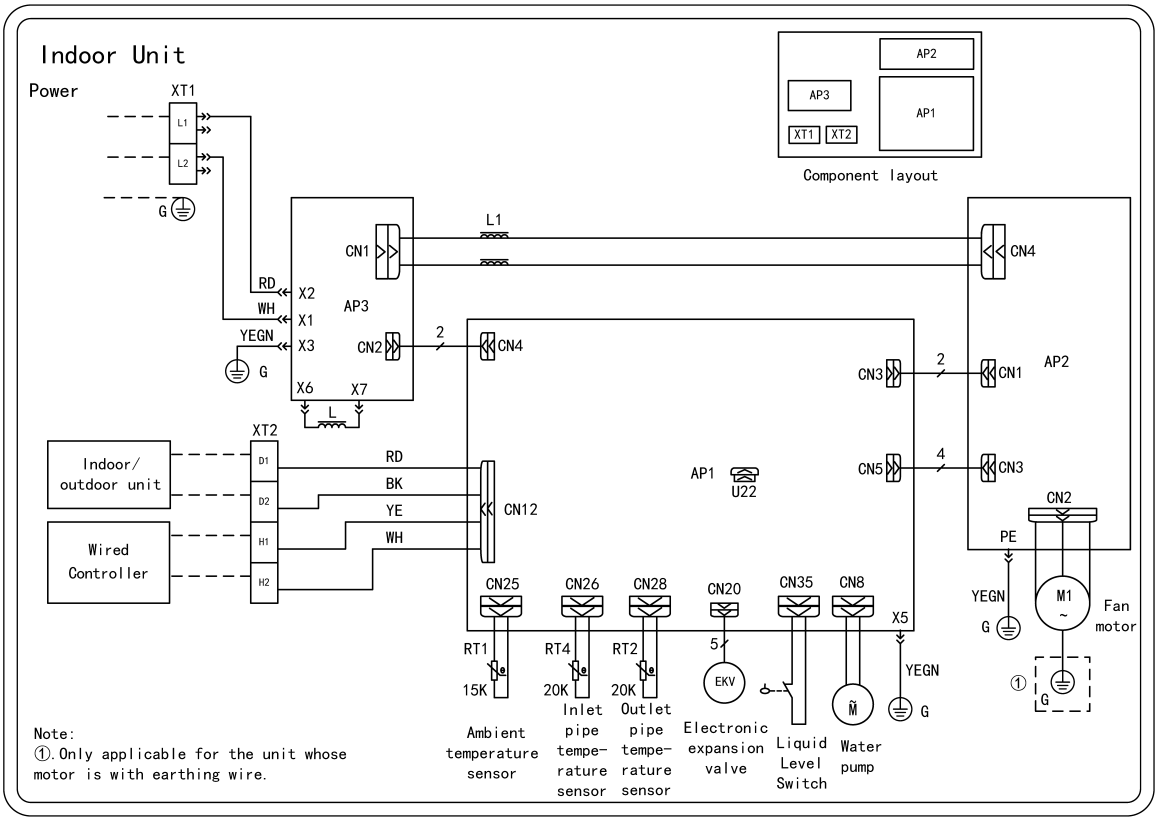

3.16 360°Air Discharge Compact Casssette Type Indoor Unit

Model: GMV-ND05T/E-T(U) / GMV-ND07T/E-T(U) / GMV-ND09T/E-T(U) / GMV-ND12T/E-T(U) / GMV-ND15T/E-T(U) / GMV-ND18T/E-T(U)

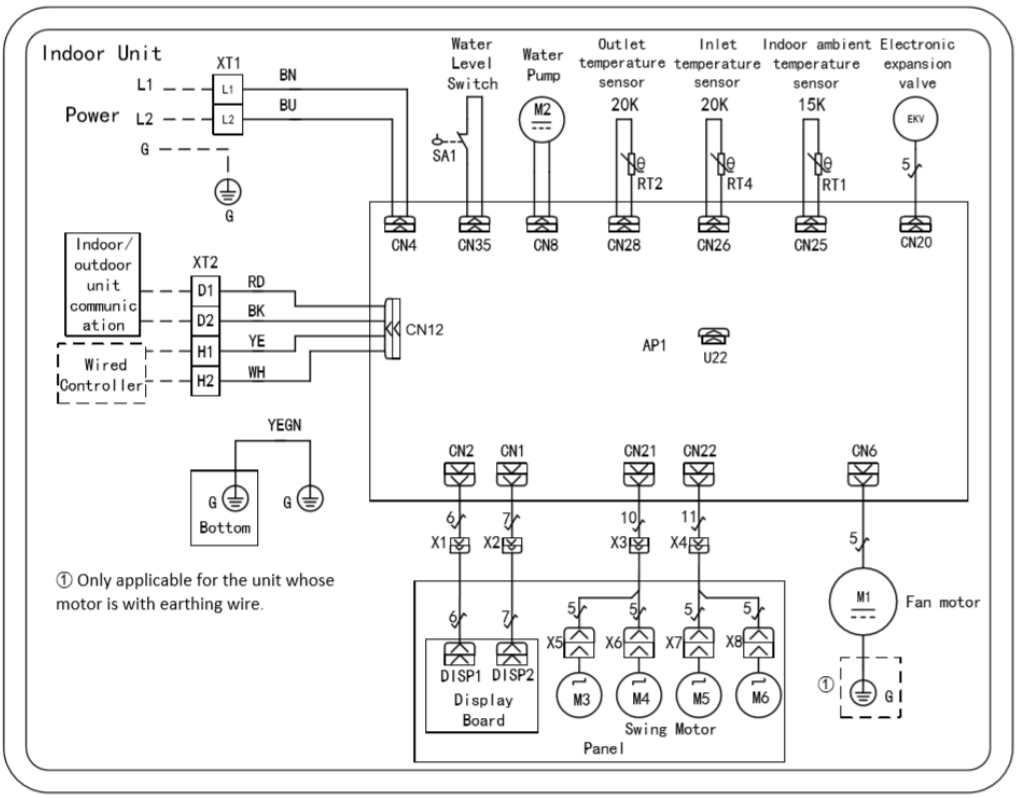

3.17 360°Air Discharge Casssette Type Indoor Unit

Model: GMV-ND07T/C-T(U) / GMV-ND09T/C-T(U) / GMV-ND12T/C-T(U) / GMV-ND15T/C-T(U) / GMV-ND18T/C-T(U) / GMV-ND22T/C-T(U) / GMV-ND24T/C-T(U) / GMV-ND30T/C-T(U) GMV-ND36T/C-T(U) / GMV-ND42T/C-T(U) / GMV-ND48T/C-T(U)

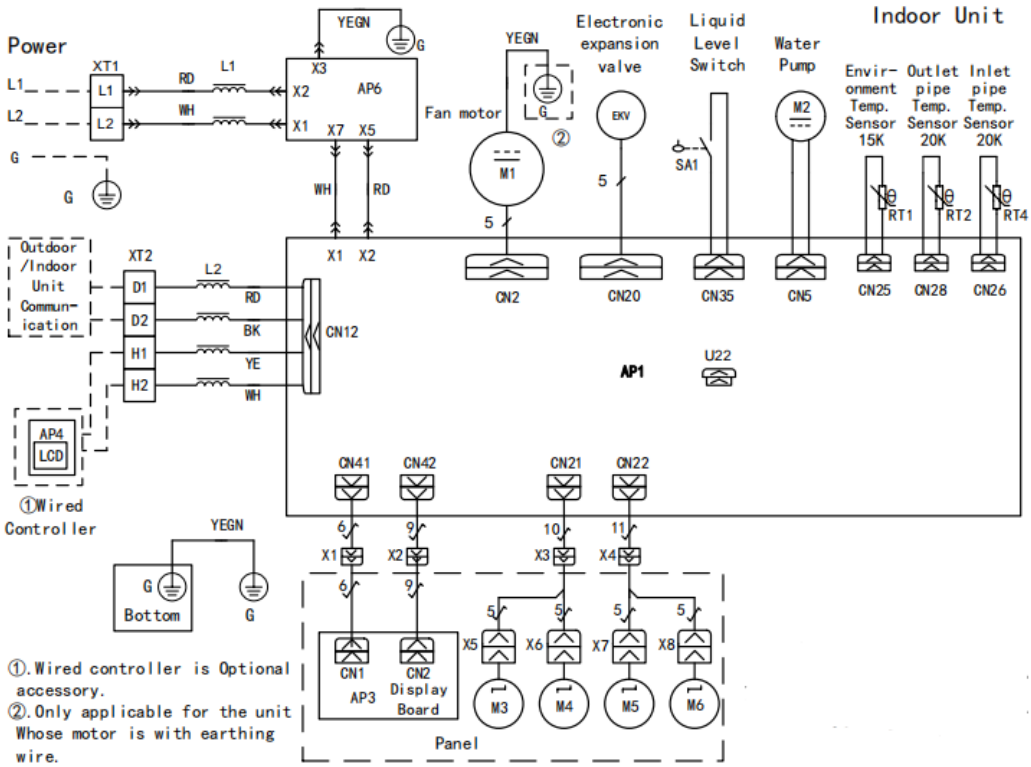

GMV-ND54T/C-T(U)

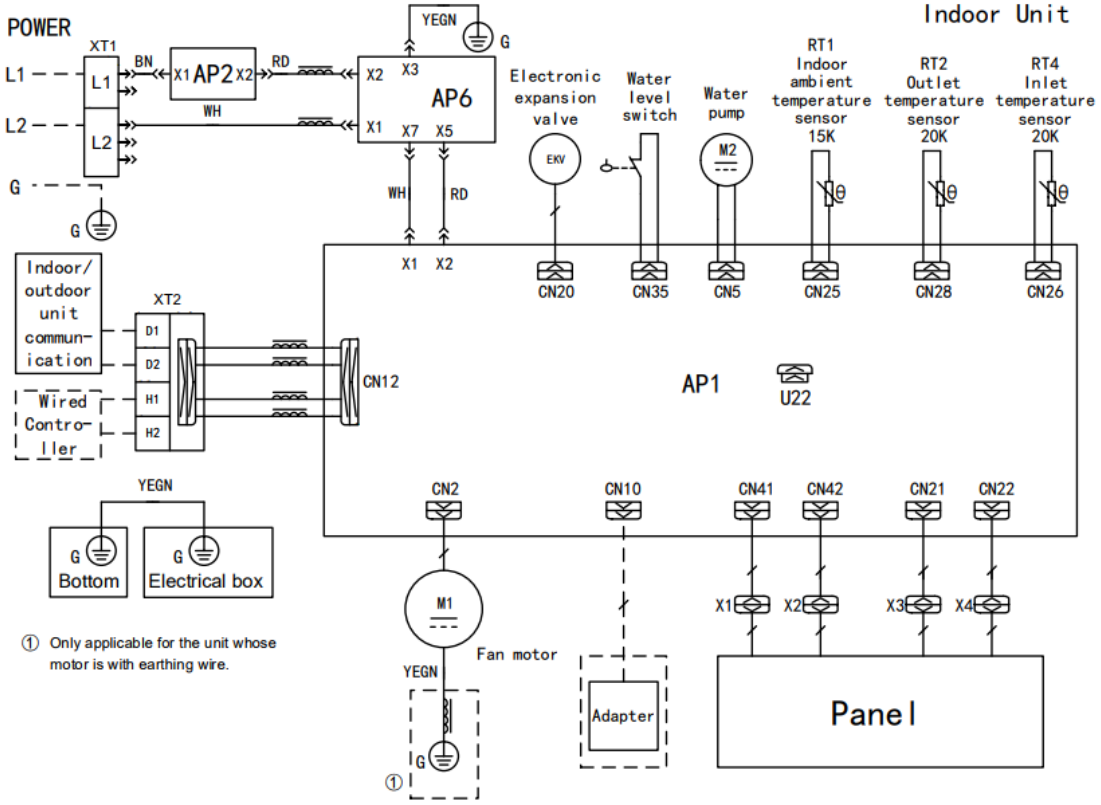

4 Disassembly And Assembly Procedure of Main Parts

4.1 Low Static Pressure Duct Type Indoor Unit

NOTICE! The following steps are specific for GMV-ND09PLS/A-T(U) units. For other units, the assembly and disassembly procedure is similar except the numbers of centrifugal fans and motors.

Motor and fan		
Precondition: The power supply has been disconnected.		
Step	Diagram	Operation Procedure
(1) Remove the line connecting to the motor.	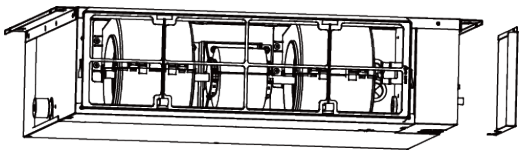	● Use a screwdriver to unscrew the electric box cover. ● Remove from the master board the line connecting to the motor and remove the tie.
(2) Remove the filter.	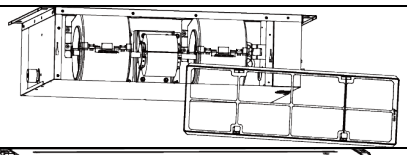	● Remove the filter from the air return frame.
(3) Remove the air return cover plate.	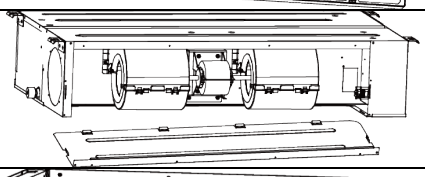	● Use a screwdriver to unscrew the air return cover plate.
(4) Remove the rear volute casing.	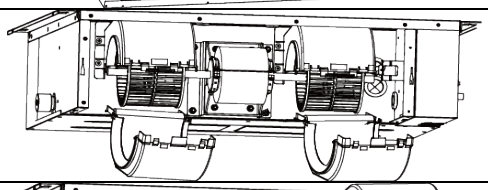	● Loosen the fasteners that connect the rear volute casing with the front volute casing and remove the rear volute casing.
(5) Remove the front volute casing.	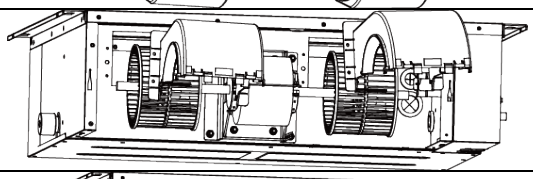	● Use a screwdriver to unscrew the front volute casing and then remove the volute casing.
(6) Loosen the centrifugal fan and motor.	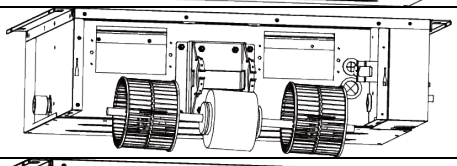	● Use a hexagon to unscrew the centrifugal fan and loosen the fasteners of the motor.
(7) Remove the motor.	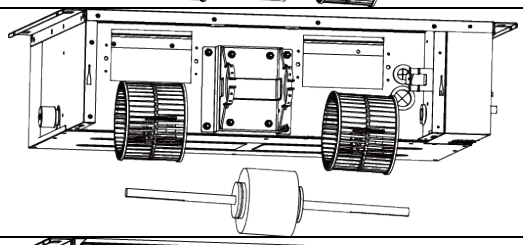	● Remove the motor from the support and remove the centrifugal fan from the motor axle. Then, remove the motor. ● For motors that are accompanied with supports, the supports need removing as well.
(8) Install a new motor.	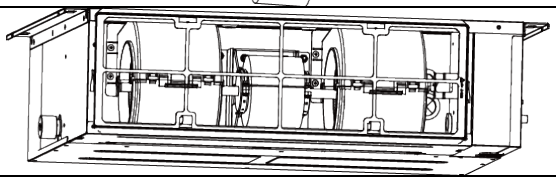	● Assemble units based on the reverse order of this procedure and power on the units for test.

NOTICE! The following steps are specific for GMV-ND09PLS/B-T(U) units. For other units, the assembly and disassembly procedure is similar except the numbers of centrifugal fans and motors.

Motor and fan		
Precondition: The power supply has been disconnected.		
Step	Diagram	Operation Procedure
1. 1.Remove the air return filter.	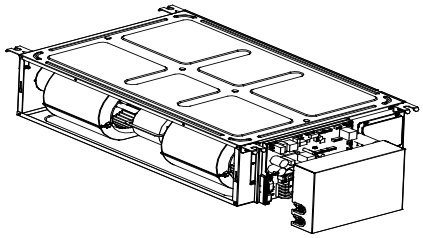	●Draw the air return filter to both sides respectively at the return air inlet.
2. Remove the cover plate of the electric box.	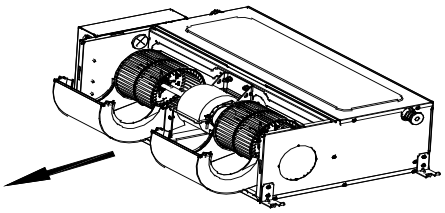	●Disconnect the power supply of the IDUs, use a screwdriver to unscrew the cover plate of the electric box, and then remove the line connecting to the motor.
3. Remove the rear volute casing.	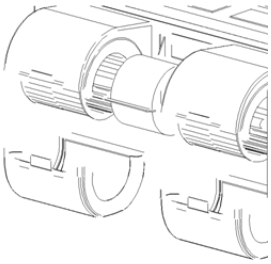	●Loosen the fasteners that connect the rear volute casing with the front volute casing and remove the rear volute casing.
4. Remove the front volute casing.	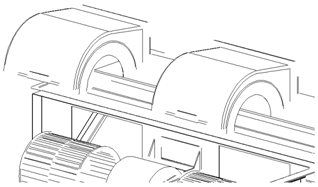	●Use a screwdriver to unscrew the front volute casing and then remove the volute casing.
5. Remove the louver and motor.	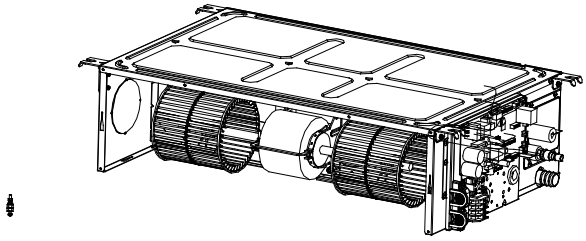	●Use a screwdriver to unscrew the louver and loosen the fasteners of the motor.
6. Install a new motor.	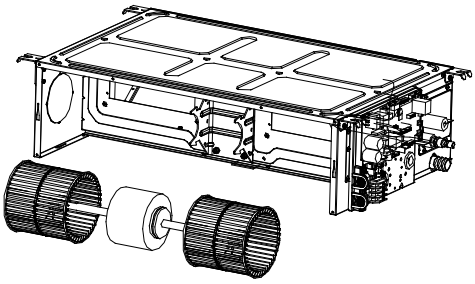	●Remove the motor from the support and remove the louver from the motor. Then, remove the motor. ●Install a new motor.

Motor and fan		
Precondition: The power supply has been disconnected.		
Step	Diagram	Operation Procedure
7. Install units in a reverse order of this procedure.	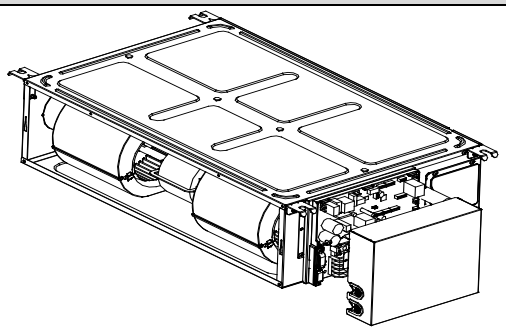	●Assemble units based on the reverse order of this procedure and power on the units for test.

4.2 Slim Duct Type Indoor Unit

NOTICE! The following steps are specific for GMV-ND24PLS/B-T(U) units. For other units, the assembly and disassembly procedure is similar except the numbers of louvers and motors.

Motor and fan		
Precondition: The power supply has been disconnected.		
Step	Diagram	Operation Procedure
(1) Remove the air return filter.	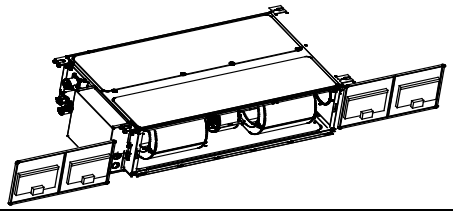	● Draw the air return filter to both sides respectively at the return air inlet.
(2) Remove the cover plate of the electric box.	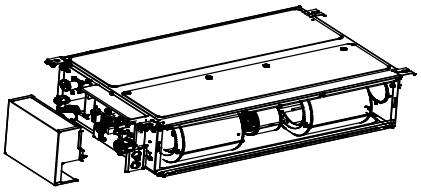	● Disconnect the power supply of the IDUs, use a screwdriver to unscrew the cover plate of the electric box, and then remove the line connecting to the motor.
(3) Remove the rear volute casing.	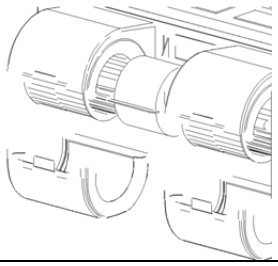	● Loosen the fasteners that connect the rear volute casing with the front volute casing and remove the rear volute casing.
(4) Remove the front volute casing.	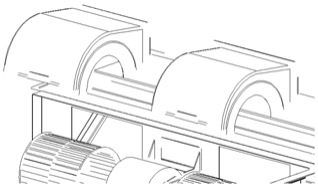	● Use a screwdriver to unscrew the front volute casing and then remove the volute casing.
(5) Remove the louver and motor.	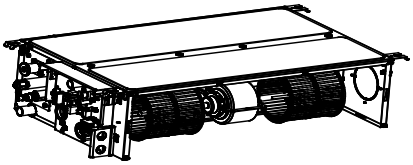	● Use a screwdriver to unscrew the louver and loosen the fasteners of the motor.

Motor and fan		
Precondition: The power supply has been disconnected.		
Step	Diagram	Operation Procedure
(6) Install a new motor.	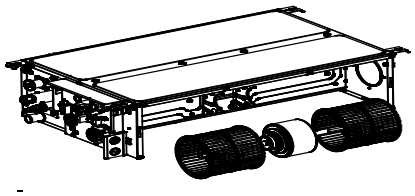	● Remove the motor from the support and remove the louver from the motor. Then, remove the motor. ● Install a new motor.
(7) Install units in a reverse order of this procedure.	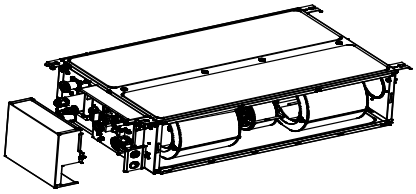	● Assemble units based on the reverse order of this procedure and power on the units for test.

4.3 Four-way Cassette Type Indoor Unit

Motor and fan		
Step	Diagram	Operation Procedure
(1) Unscrew the water tray.	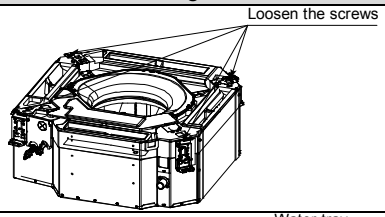	● Use a screwdriver to unscrew the water tray.
(2) Remove the water tray.	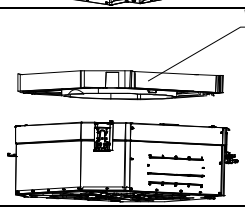	● Remove the water tray.
(3) Unscrew the centrifugal fan.	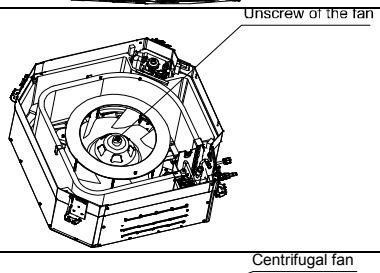	● Use a wrench to unscrew the centrifugal fan.
(4) Remove the centrifugal fan.	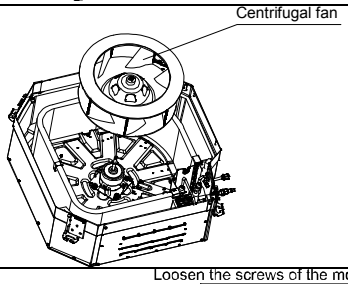	● Remove the centrifugal fan.
(5) Unscrew the motor.	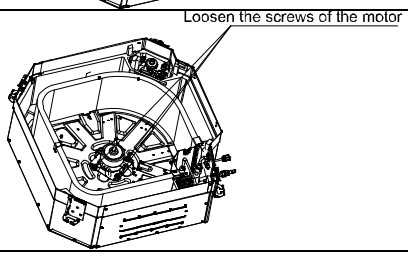	● Use a screwdriver to unscrew the motor.

Motor and fan		
Step	Diagram	Operation Procedure
(6) Replace the motor with a new one.	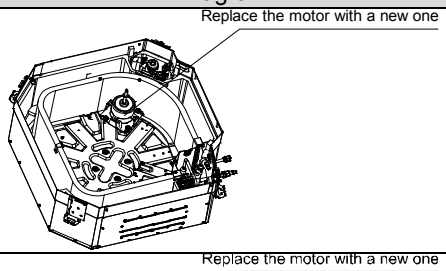	● Replace the motor with a new one.
(7) Screw the motor.	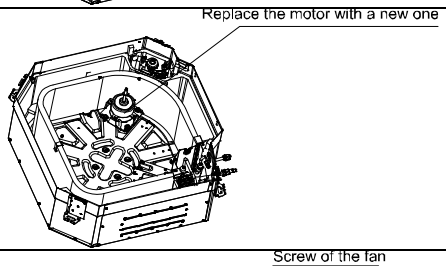	● Use a screwdriver to screw the motor.
(8) Install and screw the centrifugal fan.	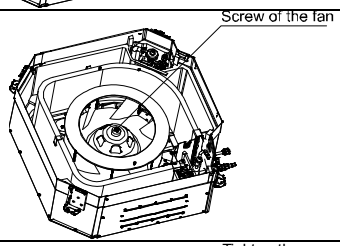	● Install the centrifugal fan and use a wrench to screw the centrifugal fan.
(9) Install and screw the water tray.	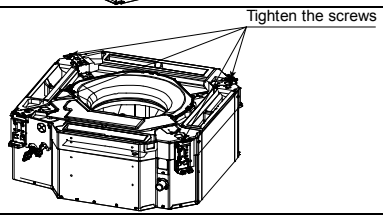	● Use a screwdriver to screw the water tray.

Pump		
Step	Diagram	Operation Procedure
(1) Unscrew the water tray.	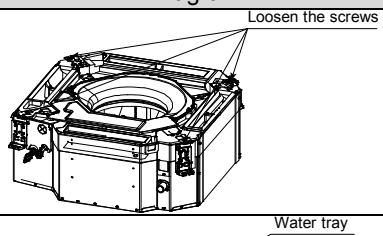	● Use a screwdriver to unscrew the water tray.
(2) Remove the water tray.	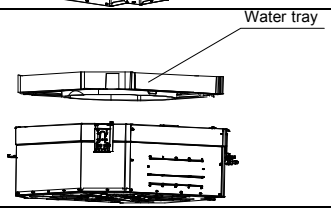	● Replace the water tray.
(3) Remove the drainage duct and unscrew the pump.	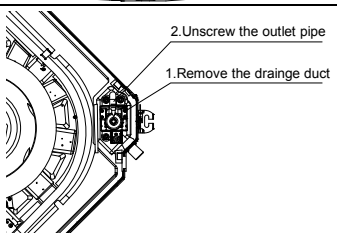	● Remove the drainage duct and use a screwdriver to unscrew the pump.

Pump		
Step	Diagram	Operation Procedure
(4) Replace the pump.	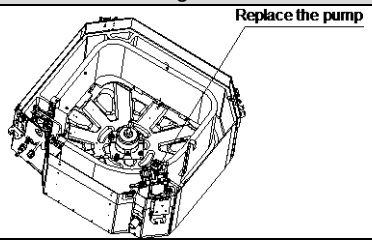	● Replace the pump.
(5) Connect the drainage duct and screw the new pump.	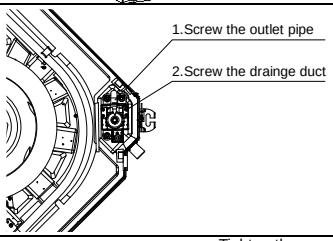	● Connect the drainage duct and use a screwdriver to screw the new pump.
(6) Install and screw the water tray.	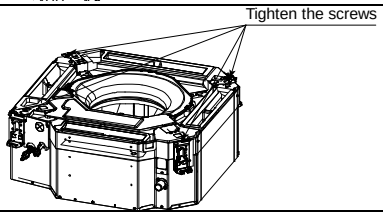	● Use a screwdriver to screw the water tray.

4.4 Wall Mounted Type Indoor Unit

Removal of Fan Motor		
Remark: before removing, making sure power is disconnected.		
Step	Diagram	Operation Procedure
(1) Remove the louver.	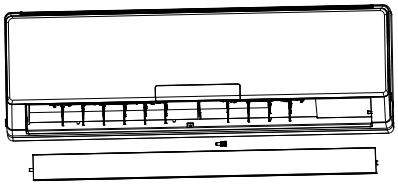	● Take off the axle bush of the louver. ● Remove the louver.
(2) Open the front panel.	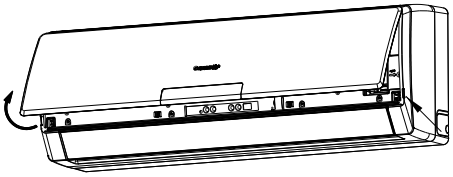	● Hold the indents on both sides of the panel and pull it out in the direction shown by the arrow.
(3) Remove the electrical box cover 2.	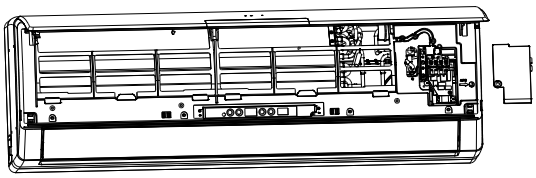	● Unscrew the screws fixing the electrical box cover with a screwdriver. Take off the box cover 2. ● Detach the ambient temperature sensor from the conduit.

Removal of Fan Motor		
Remark: before removing, making sure power is disconnected.		
Step	Diagram	Operation Procedure
(4) Remove the front panel assembly.	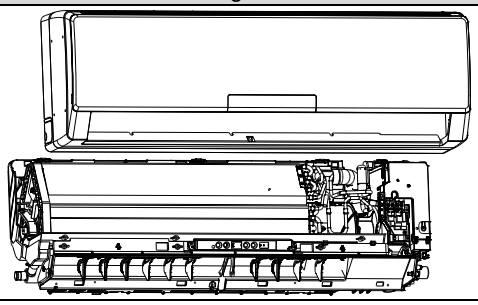	● Unscrew the screws fixing the front panel assembly. ● Remove the front panel assembly.
(5) Remove the electrical box cover 1.	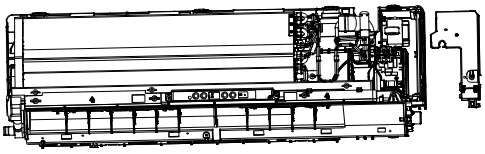	● Press on the buckle of the box cover 1 and then take off the cover.
(6) Remove the main board.	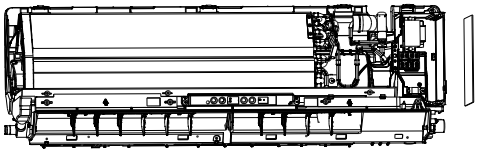	● Release the wiring terminals connected to the main board. ● Remove the main board.
(7) Remove the electrical box.	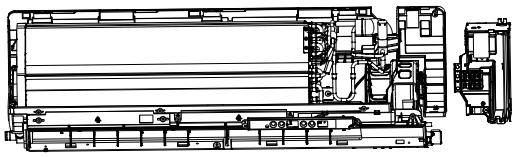	● Unscrew the screws fixing the electrical box with a screwdriver. ● Remove the electrical box.
(8) Remove the evaporator.	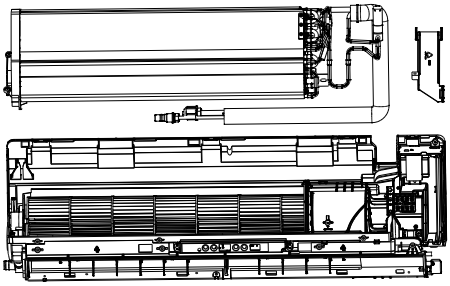	● Use a screwdriver to unscrew the screws fixing the press plate of connection pipe on the back of the unit and take off the press plate. ● Unscrew the screws of evaporator with a screwdriver and then remove the evaporator.
(9) Remove motor's pressing plate.	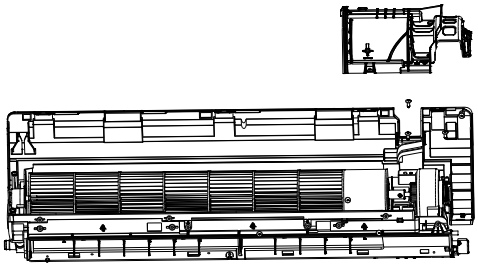	● Unscrew the fixing screws of the pressing plate with a screwdriver and then remove it.

Removal of Fan Motor		
Remark: before removing, making sure power is disconnected.		
Step	Diagram	Operation Procedure
(10) Remove the motor and fan.	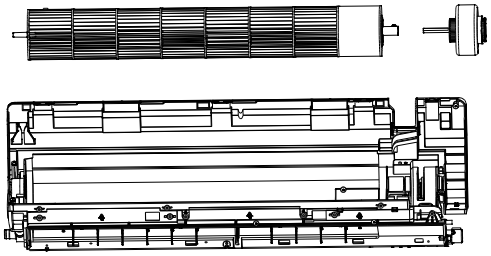	● Take off the motor and fan directly. ● Use a screwdriver to unscrew the screws connecting the motor and the fan.
(11) Install a new motor.	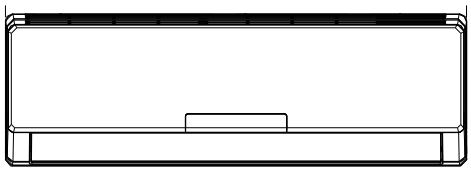	● Assemble units based on the reverse order of this procedure and power on the units for test.

4.5 Console Type Indoor Unit

Removal of Fan Motor		
Remark: before removing, making sure power is disconnected.		
Step	Diagram	Operation Procedure
(1) Open the panel.	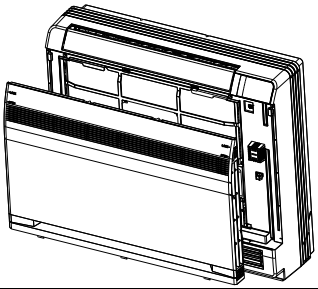	● Press clasps at both sides to “OPEN” position.
(2) Remove filter and front case.	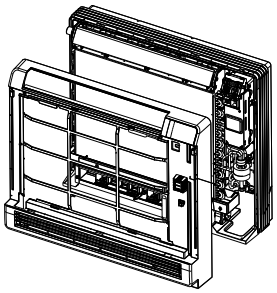	● Remove 5 screws fixing the front case.
(3) Remove electric box.	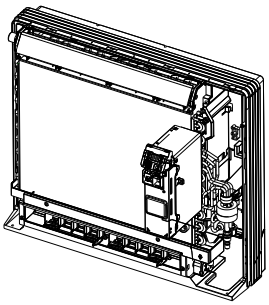	● Open electric box cover, loosen all connection wires and then remove screws.

Removal of Fan Motor		
Remark: before removing, making sure power is disconnected.		
Step	Diagram	Operation Procedure
(4) Remove water tray and swing motor.	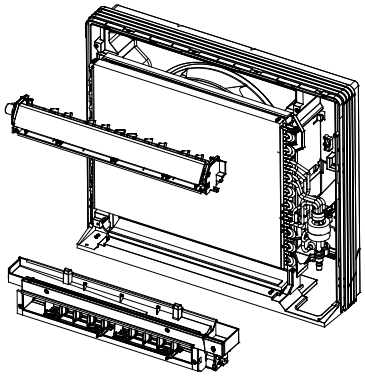	● Remove 2 screws fixing water tray and swing motor respectively.
(5) Remove evaporator.	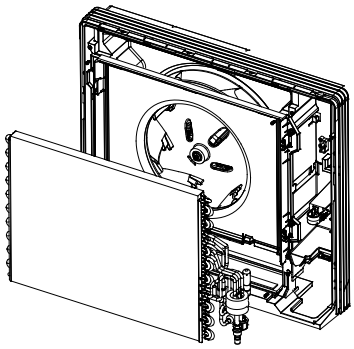	● Remove the fixer fixing the evaporator, press 2 clasps at left side and then remove the evaporator.
(6) Remove reversion loop and centrifugal blade.	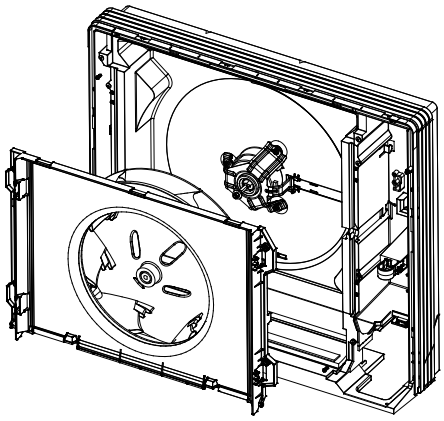	● Remove 4 screws fixing the reversion loop and then remove the reversion loop' remove nuts on blade and then remove the centrifugal blade.

4.6 High Static Pressure Duct Type Indoor Unit

NOTICE! The following steps are specific for GMV-ND18PHS/A-T(U) units. For other units, the assembly and disassembly procedure is similar except the specifications of centrifugal fans and motors.

Motor and fan		
Precondition: The power supply has been disconnected.		
Step	Diagram	Operation Procedure
(1) Remove the line connecting to the motor.	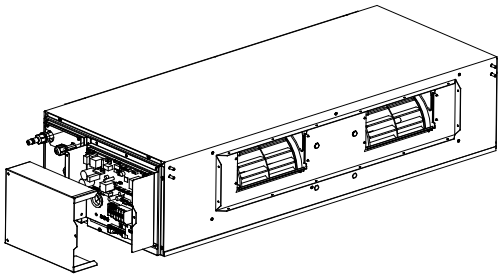	● Use a screwdriver to unscrew the electric box cover. ● Remove from the master board the line connecting to the motor and remove the tie.

Motor and fan		
Precondition: The power supply has been disconnected.		
Step	Diagram	Operation Procedure
(2) Disassemble the seal plate and cover plate.	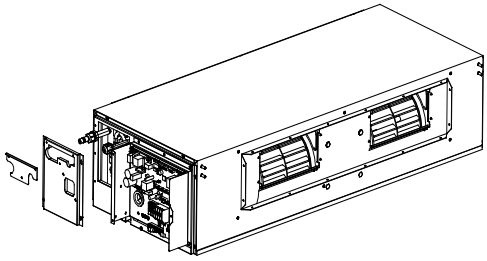	● Use a screwdriver to unscrew the seal plate and cover plate and then remove them.
(3) Remove the cover plate component.	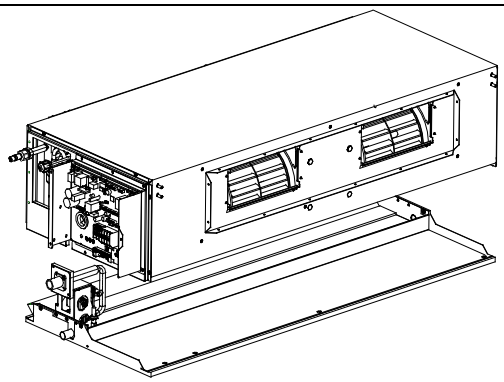	● Use a screwdriver to unscrew the cover plate component.
(4) Disassemble the centrifugal fan.	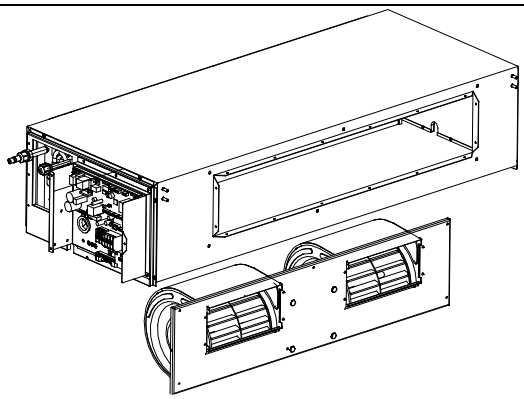	● Use a screwdriver to unscrew the centrifugal fan.
(5) Remove the motor and centrifugal fan.	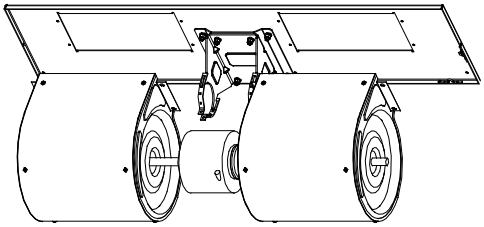	● Use a screwdriver to unscrew the centrifugal fan. ● Loosen the fasteners of the motor and remove the motor from the support. ● For motors that are accompanied with supports, the supports need removing as well.
(6) Remove the centrifugal fan.	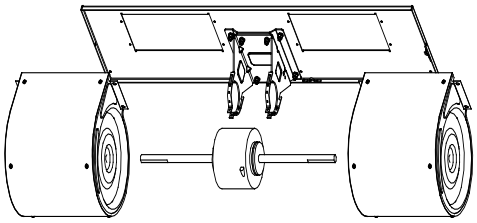	● Use a hexagon to unscrew the fan and remove the centrifugal fan from the motor axle.

Motor and fan		
Precondition: The power supply has been disconnected.		
Step	Diagram	Operation Procedure
(7) Install a new motor.	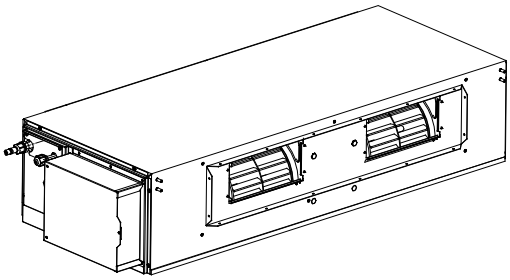	● Assemble units based on the reverse order of this procedure and power on the units for test.

4.7 Two-way Cassette Type Indoor Unit

NOTICE! The following steps are specific for GMV-ND09TS/A-T(U) units. For other units, the assembly and disassembly procedure is similar except the numbers of centrifugal fans and motors.

Removal of Fan Motor		
Precondition: The power supply has been disconnected.		
Step	Diagram	Operation Procedure
(1) Remove the grille	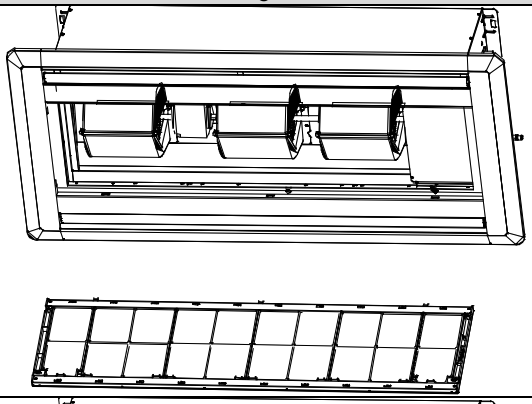	● Slip the fasteners on the panel, open the grille, remove it.
(2) Remove the line connecting to the motor.	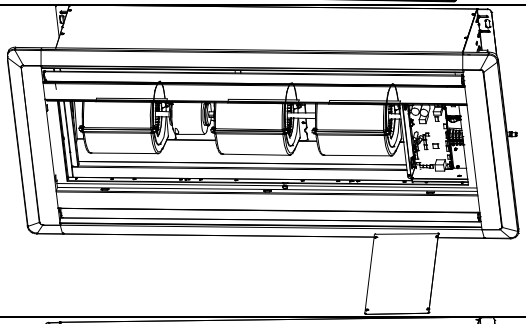	● Use a screwdriver to unscrew the electric box cover. ● Remove from the master board the line connecting to the motor and remove the tie.
(3) Remove the motor/Remove the motor from the support		● Use a screwdriver to unscrew the motor/volute casing subassembly and joint slack. ● Loosen the fasteners of the motor, remove the motor from the support. ● Remove the volute casing subassembly as well.

Removal of Fan Motor		
Precondition: The power supply has been disconnected.		
Step	Diagram	Operation Procedure
(4) Remove the centrifugal fan	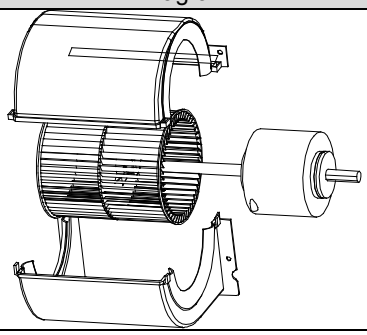	● Remove the volute casing. ● Use a hexagon to unscrew the centrifugal fan, remove it from motor axle.
(5) Replace the motor with a new one.	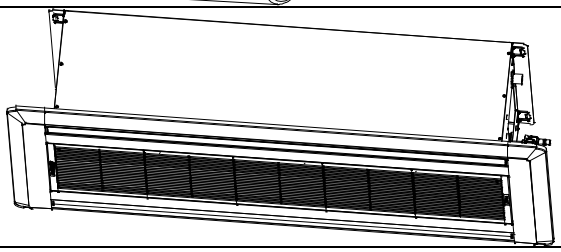	● Assemble units based on the reverse order of this procedure and power on the units for test.

NOTICE!The following steps are specific for GMV-ND24TS/B-T(U) units. For other units, the assembly and disassembly procedure is similar except the numbers of centrifugal fans and motors.

Removal of Fan Motor		
Precondition: The power supply has been disconnected.		
Step	Diagram	Operation Procedure
(1) Remove the grille	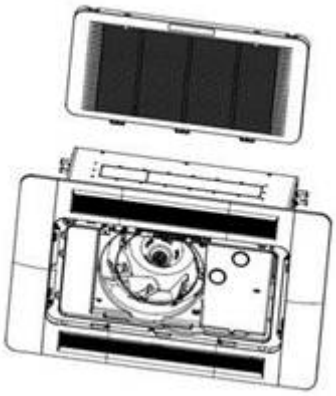	● Slide the buckle in the middle of the panel to open the panel grille
(2) Remove the line connecting to the motor.	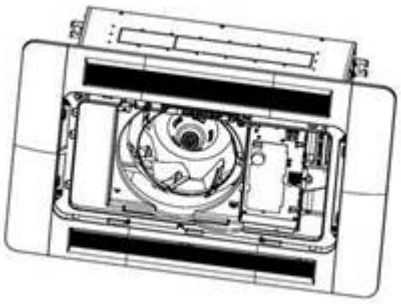	● Use a screwdriver to unscrew the fixing screws of the electric box cover. ● Find the motor wire, unplug from the main board, and remove the fasteners.

Removal of Fan Motor		
Precondition: The power supply has been disconnected.		
Step	Diagram	Operation Procedure
(3) Remove the fan and guide ring	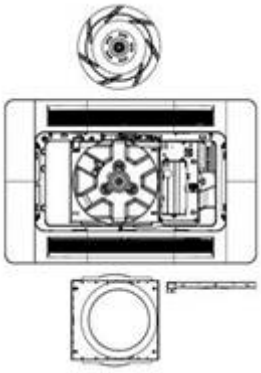	● Loosen the fixed guide ring and screw with a screwdriver ● Remove the guide ring and the wire board ● Unscrew the nut fixing the fan with a wrench, then remove the fan
(4) Remove motor.	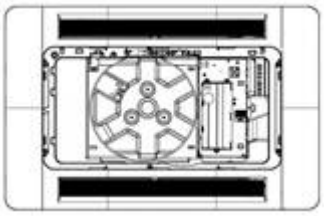	● The wrench loosens the fixing motor nut ● Cut off the fasteners that fixed the motor wire ● Remove the motor
(5) Replace with a new motor	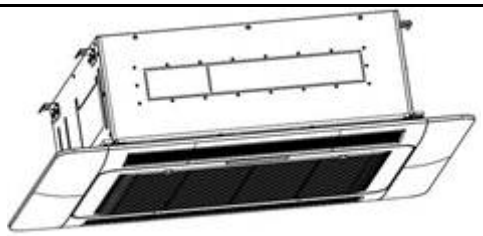	● Assemble units based on the reverse order of this procedure and power on the units for test.

4.8 Floor Ceiling Type Indoor Unit

NOTICE! The following steps are specific for GMV-ND48ZD/A-T(U) units. For other units, the assembly and disassembly procedure is similar except the numbers of centrifugal fans and motors.

Motor and fan		
Precondition: The power supply has been disconnected.		
Step	Diagram	Operation Procedure
(1) Remove the air return grille.	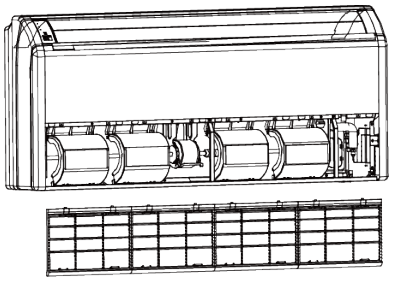	● Loosen the fasteners of the air return grille and then remove the grille.
(2) Remove the left and right cover plates.	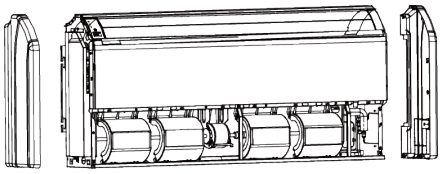	● Use a screwdriver to unscrew the left and right cover plates and then remove the cover plates.

Motor and fan		
Precondition: The power supply has been disconnected.		
Step	Diagram	Operation Procedure
(3) Remove the electric box cover and the line connecting to the motor.	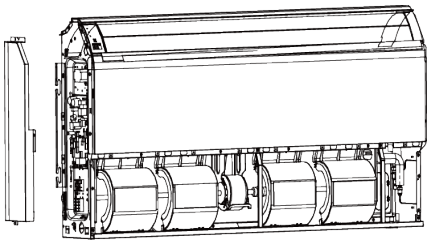	● Use a screwdriver to unscrew the electric box cover. ● Remove from the master board the line connecting to the motor and remove the tie.
(4) Remove the limit board.	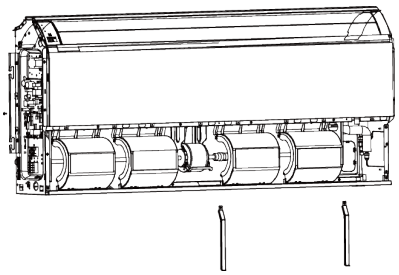	● Use a screwdriver to unscrew the limit board and then remove the board.
(5) Remove the rear connecting board.	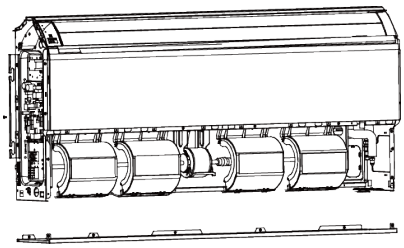	● Use a screwdriver to unscrew the rear connecting board and then remove the board.
(6) Remove the rear volute casing.	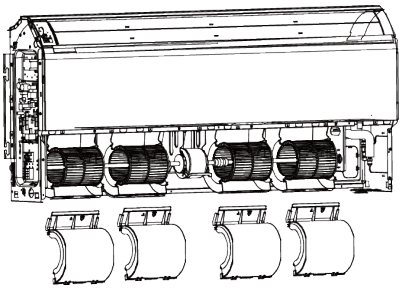	● Loosen the fasteners that connect the rear volute casing with the front volute casing and remove the rear volute casing.
(7) Remove the front volute casing.	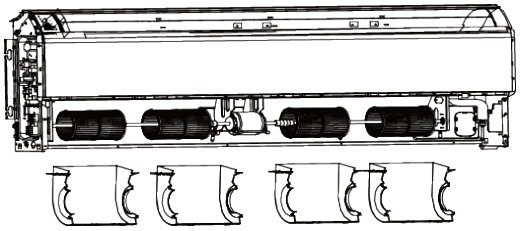	● Use a screwdriver to unscrew the front volute casing and then remove the volute casing.
(8) Remove the centrifugal fan.	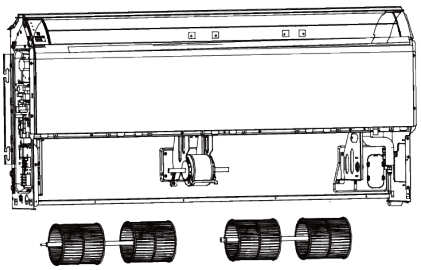	● Loosen the fasteners that connect the coupler with the motor axle and remove the centrifugal fan.

Motor and fan		
Precondition: The power supply has been disconnected.		
Step	Diagram	Operation Procedure
(9) Remove the motor.	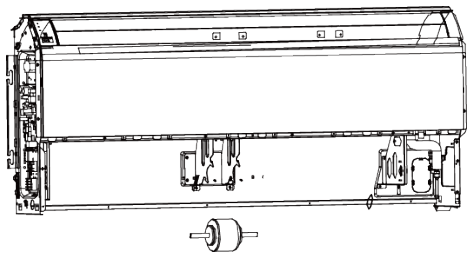	● Remove the motor from the support and remove the centrifugal fan from the motor axle. Then, remove the motor. ● For motors that are accompanied with supports, the supports need removing as well.
(10) Install a new motor.	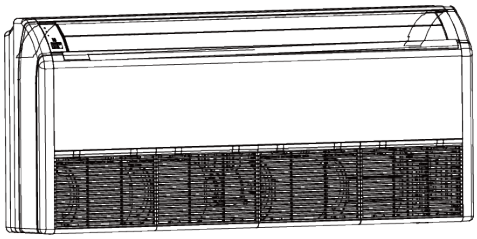	● Assemble units based on the reverse order of this procedure and power on the units for test.

4.9 Fresh Air Processing Indoor Unit

GMV-NDX42P/A-T(U) / GMV-NDX48P/A-T(U)

Motor and fan		
Precondition: The power supply has been disconnected.		
Step	Diagram	Operation Procedure
(1) Remove the line connecting to the motor.	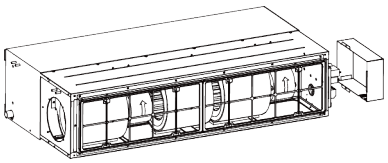	● Use a screwdriver to unscrew the electric box cover. ● Remove from the master board the line connecting to the motor and remove the tie.
(2) Remove the filter. And the air return cover plate.	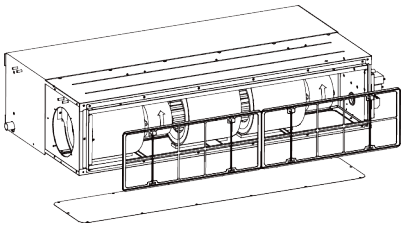	● Remove the filter from the air return frame. ● Use a screwdriver to unscrew the air return cover plate.
(3) Remove the rear volute casing and Remove the front volute casing.	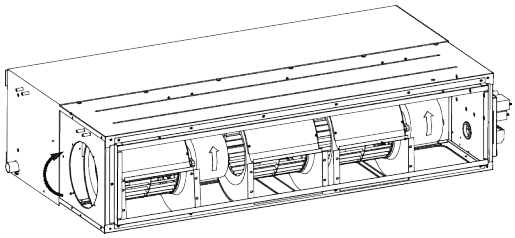	● Loosen the fasteners that connect the rear volute casing with the front volute casing and remove the rear volute casing. ● Use a screwdriver to unscrew the front volute casing and then remove the volute casing.
(4) Remove the motor.	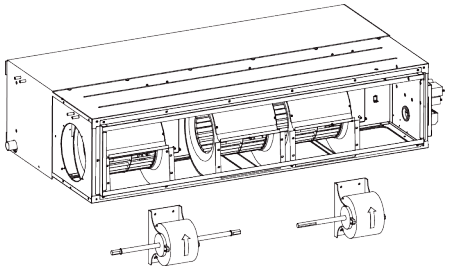	● Remove the motor from the support and remove the louver from the motor axle. Then, remove the motor.

Motor and fan		
Precondition: The power supply has been disconnected.		
Step	Diagram	Operation Procedure
(5) Install a new motor.	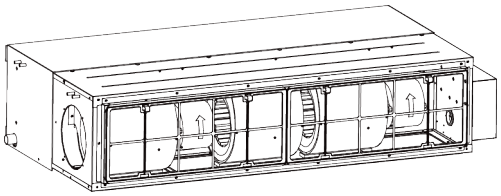	● Assemble units based on the reverse order of this procedure and power on the units for test.

GMV-NDX54P/A-T(U) / GMV-NDX72P/A-T(U) / GMV-NDX96P/A-T(U)

Motor and fan		
Precondition: The power supply has been disconnected.		
Step	Diagram	Operation Procedure
(1) Remove the cover plate component.	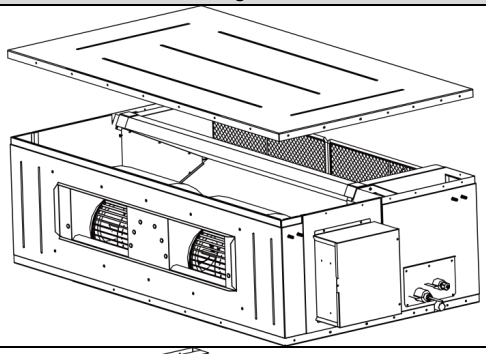	● Use a screwdriver to unscrew the cover plate component.
(2) Remove the line connecting to the motor.	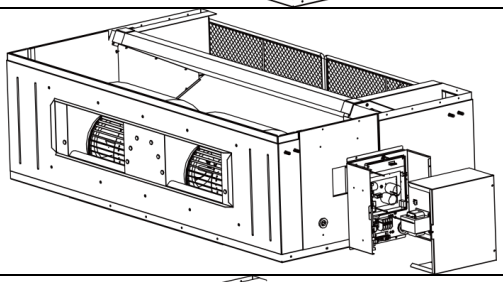	● Use a screwdriver to unscrew the electric box cover. ● Remove from the master board the line connecting to the motor and remove the tie.
(3) Disassemble the centrifugal fan.	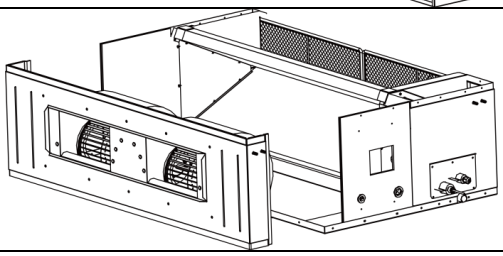	● Use a screwdriver to unscrew the centrifugal fan.
(4) Remove the centrifugal fan	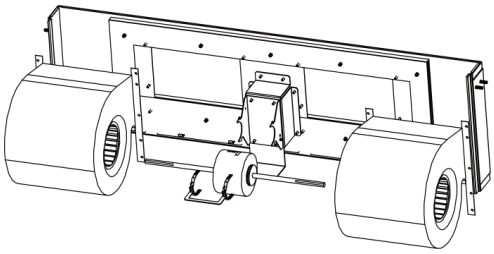	● Use a hexagon to unscrew the centrifugal fan and remove the centrifugal fan from the motor axle.
(5) Install a new motor.	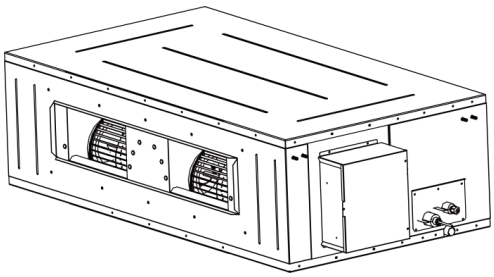	● Assemble units based on the reverse order of this procedure and power on the units for test.

4.10 Compact Four-way Cassette Type Indoor Unit

Motor and fan		
Step	Diagram	Operation Procedure
(1) Unscrew the water tray.	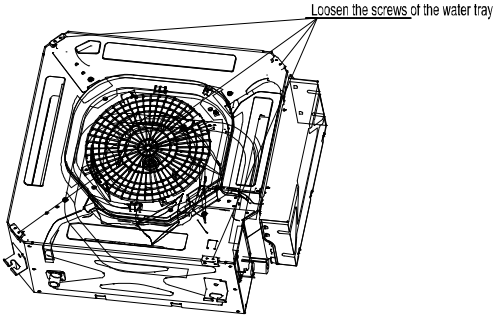	● Use a screwdriver to unscrew the water tray.
(2) Remove the water tray.	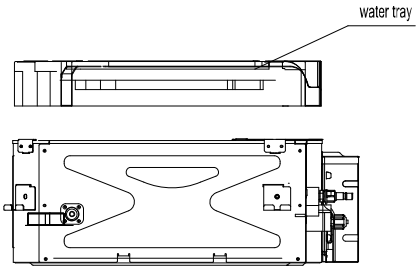	● Remove the water tray.
(3) Unscrew the centrifugal fan.	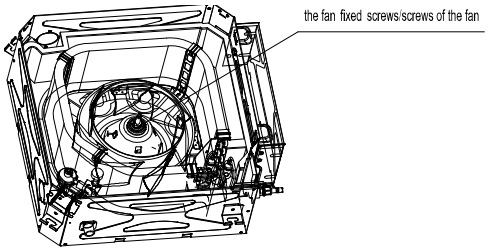	● Use a wrench to unscrew the centrifugal fan.
(4) Remove the centrifugal fan.	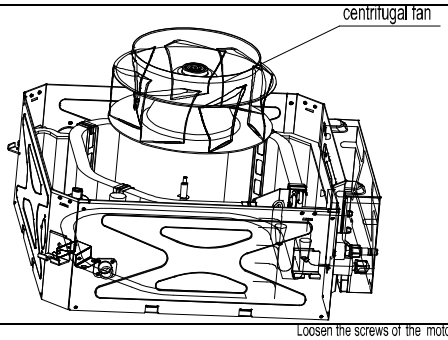	● Remove the centrifugal fan.
(5) Unscrew the motor.	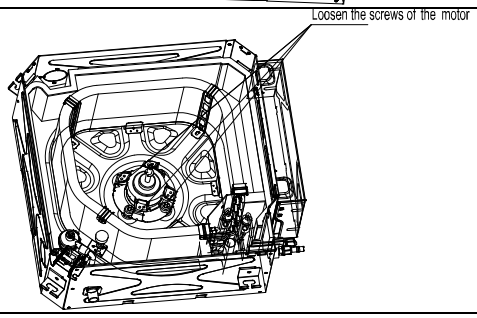	● Use a screwdriver to unscrew the motor.

Motor and fan		
Step	Diagram	Operation Procedure
(6) Replace the motor with a new one.	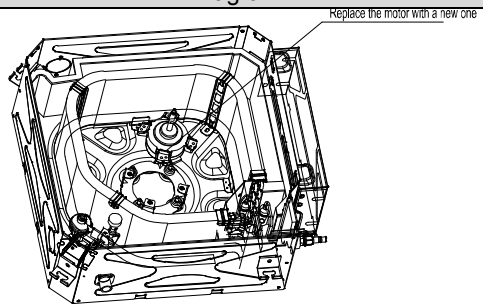	● Replace the motor with a new one.
(7) Screw the motor.	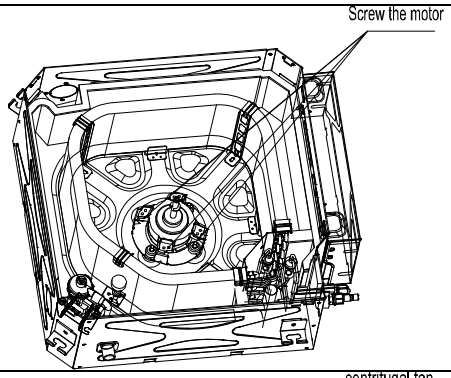	● Use a screwdriver to screw the motor.
(8) Install and screw the centrifugal fan.	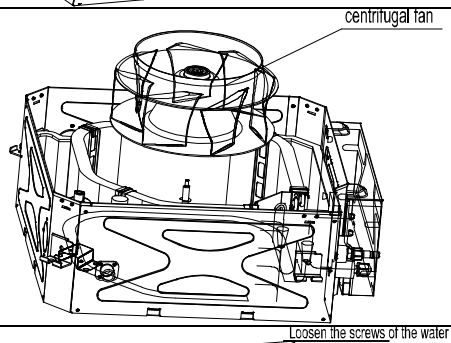	● Install the centrifugal fan and use a wrench to screw the centrifugal fan.
(9) Install and screw the water tray.	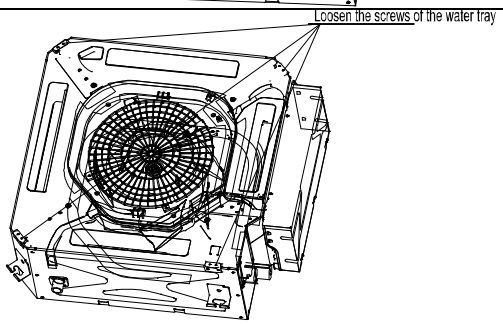	● Use a screwdriver to screw the water tray

Pump		
Step	Diagram	Operation Procedure
(1) Unscrew the water tray.	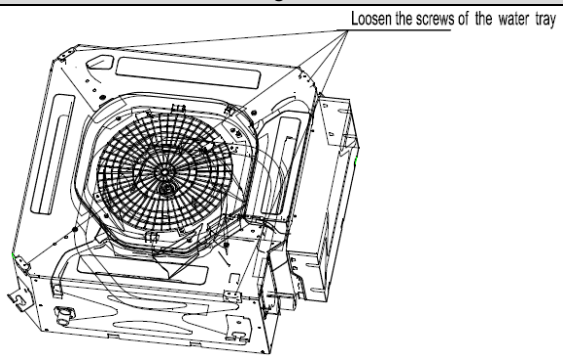	● Use a screwdriver to unscrew the water tray.

Pump		
Step	Diagram	Operation Procedure
(2) Remove the water tray.	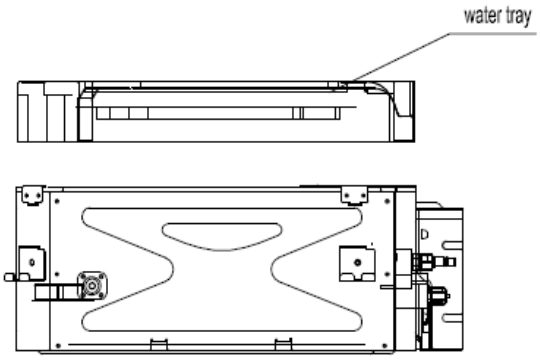	● Replace the water tray.
(3) Remove the drainage duct and unscrew the pump.	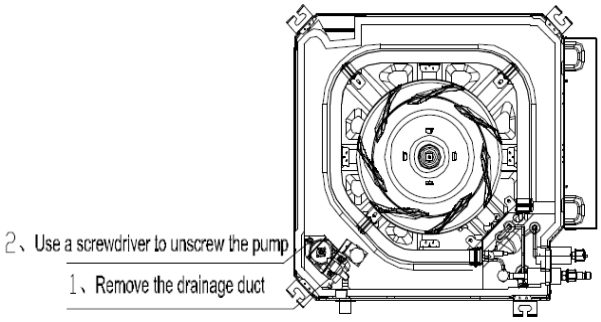	● Remove the drainage duct and use a screwdriver to unscrew the pump.
(4) Replace the pump.	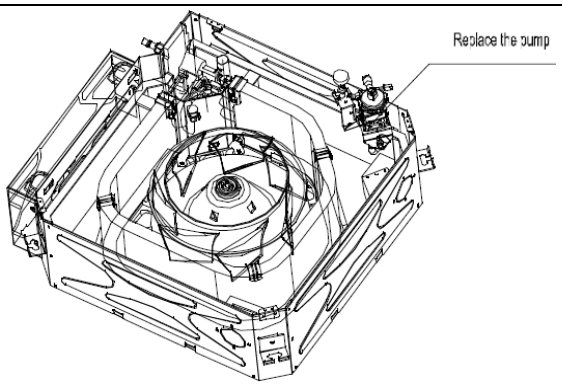	● Replace the pump.
(5) Connect the drainage duct and screw the new pump.	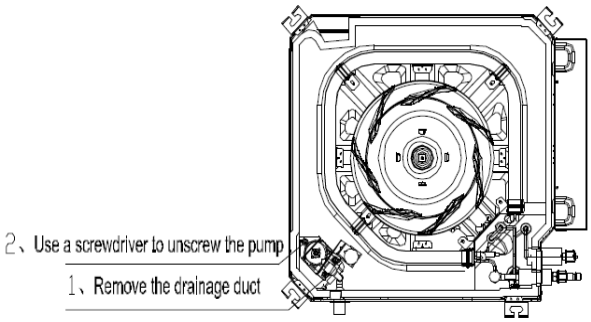	● Connect the drainage duct and use a screwdriver to screw the new pump.
(6) Install and screw the water tray.	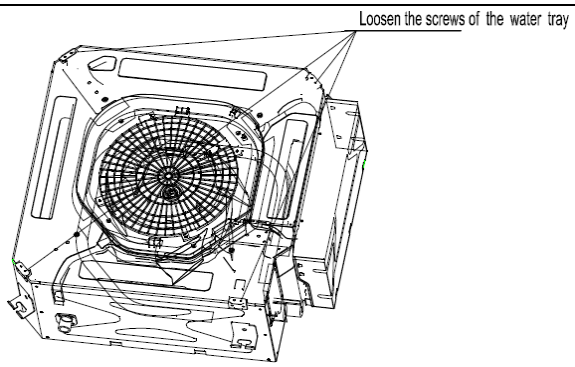	● Use a screwdriver to screw the water tray.

4.11 Super High Static Pressure Duct Type Indoor Unit

Note: The following steps are specific for GMV-ND24PHS/B-T(U) units. For other units, the assembly and disassembly procedure is similar except the specifications of centrifugal fans and motors.

Motor and fan		
Precondition: The power supply has been disconnected.		
Step	Diagram	Operation Procedure
(1) Remove the line connecting to the motor.	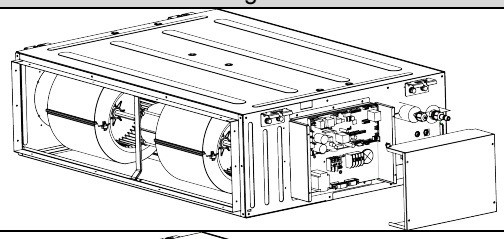	● Use a screwdriver to unscrew the electric box cover. ● Remove from the master board the line connecting to the motor and remove the tie.
(2) Disassemble the seal plate and cover plate.	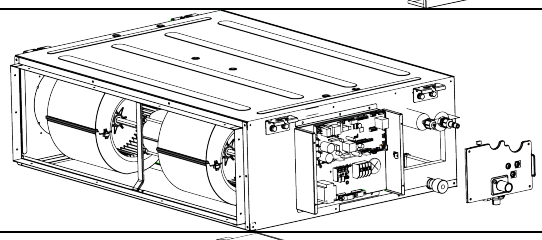	● Use a screwdriver to unscrew the seal plate and cover plate and then remove them.
(3) Remove the grille.	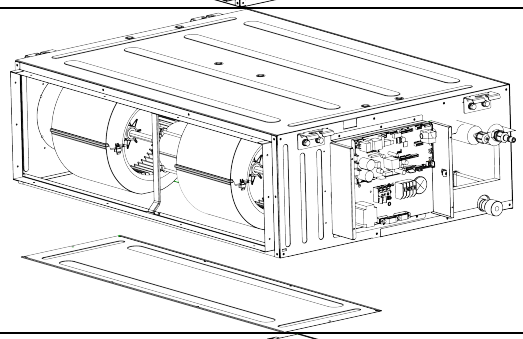	● Use a screwdriver to unscrew the cover plate component.
(4) Remove the centrifugal fan.	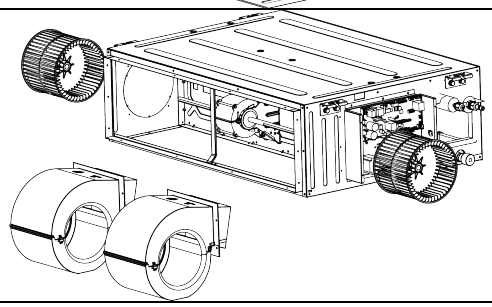	● Use a screwdriver to unscrew the front volute casing and then remove the volute casing.
(5) Remove the motor.	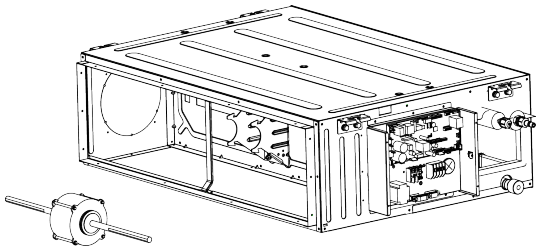	● Remove the motor from the support and remove the centrifugal fan from the motor axle. Then, remove the motor. ● For motors that are accompanied with supports, the supports need removing as well.
(6) Install a new motor.	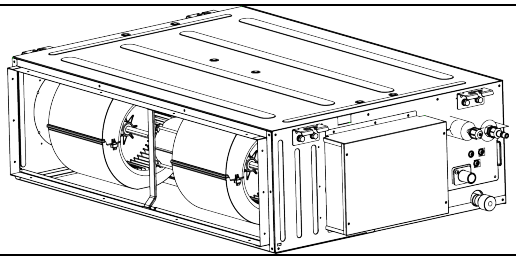	● Assemble units based on the reverse order of this procedure and power on the units for test.

GMV-ND72PH/B-T(U) / GMV-ND96PH/B-T(U)

Motor and fan		
Precondition: The power supply has been disconnected.		
Step	Diagram	Operation Procedure
(1) Remove the line connecting to the motor.	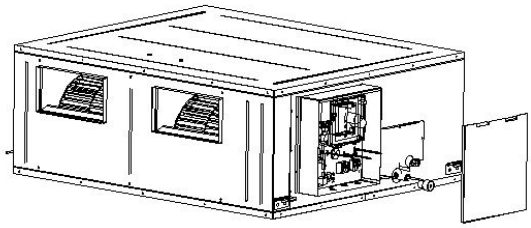	● Use a screwdriver to unscrew the electric box cover. ● Remove from the master board the line connecting to the motor and remove the tie.
(2) Disassemble the seal plate and cover plate.	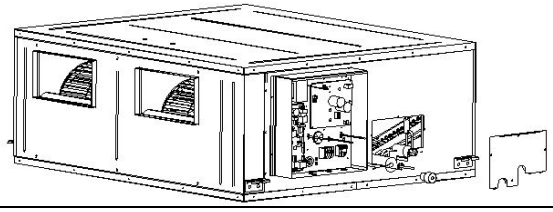	● Use a screwdriver to unscrew the seal plate and cover plate and then remove them.
(3) Remove the grille	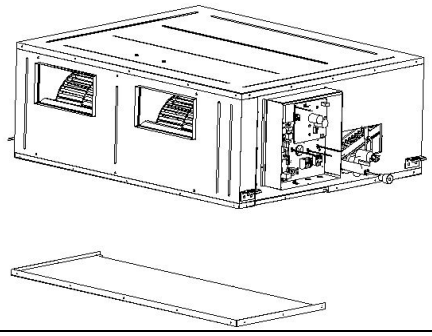	● Use a screwdriver to unscrew the cover plate component.
(4) Remove the centrifugal fan.	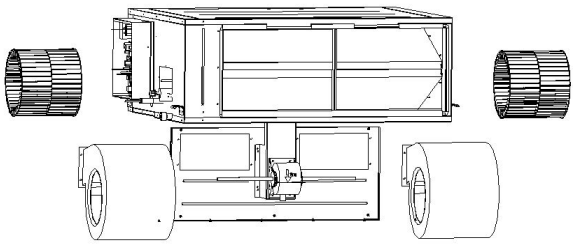	● Use a screwdriver to unscrew the front volute casing and then remove the volute casing.
(5) Remove the motor.	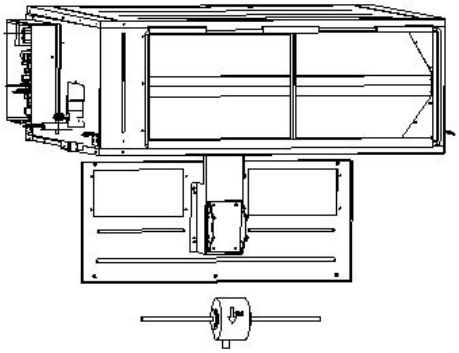	● Remove the motor from the support and remove the centrifugal fan from the motor axle. Then, remove the motor. ● For motors that are accompanied with supports, the supports need removing as well.
(6) Install a new motor.	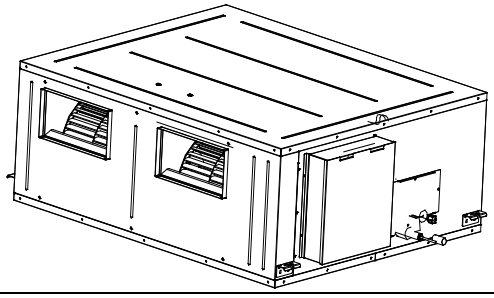	● Assemble units based on the reverse order of this procedure and power on the units for test.

4.12 Air Handler type Indoor Unit

Motor and fan		
Precondition: The power supply has been disconnected.		
Procedures	Diagrams	Operating Instructions
(1) Remove the upper panel.	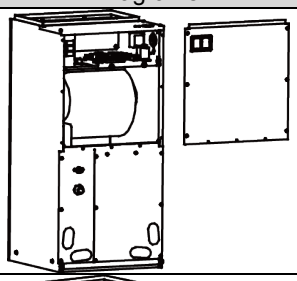	● Loosen screws round the upper panel with a screwdriver. ● Remove the upper panel from unit.
(2) Remove the fan.	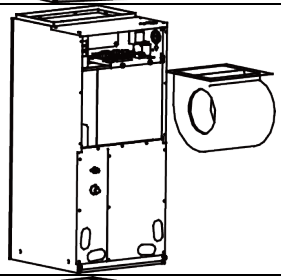	● Disconnect the wires of the fan from the wiring terminal and draw them out. ● Loosen screws located at the front of the fan with a screwdriver. ● Remove the fan from the unit.
(3) Remove the motor.	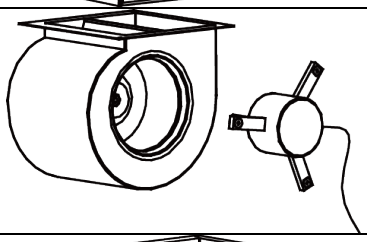	● Loosen screws fixing the motor and fan blades. ● Loosen screw bolts fixing the bracket. ● Remove the motor rightward from the fan.
(4) Reinstall the fan.	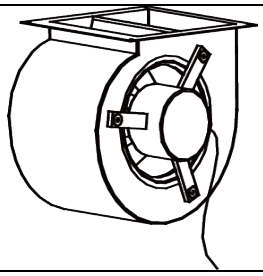	● Place the motor at the proper position. ● Tighten screws fixing the motor and fan blades. ● Tighten screw bolts fixing the motor bracket. ● After the installation, reassemble the unit as before.

4.13 1-way Cassette Type Indoor Unit

Motor and fan		
Step	Diagram	Operation Procedure
(1) Unscrew the water tray.	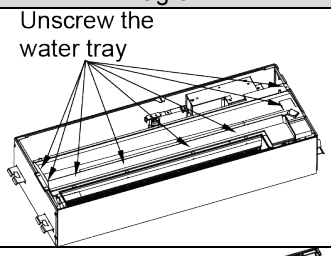	● Use a screwdriver to unscrew the water tray.
(2) Remove the water tray.	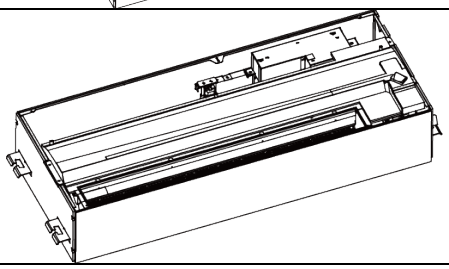	● Remove the water tray.

Motor and fan		
Step	Diagram	Operation Procedure
(3) Unscrew the volute tongue.	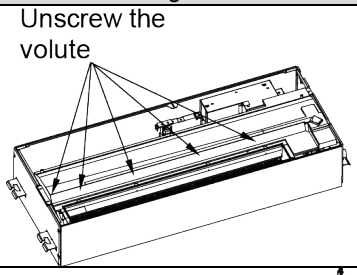	● Use a screwdriver to unscrew the volute tongue.
(4) Remove the volute tongue.	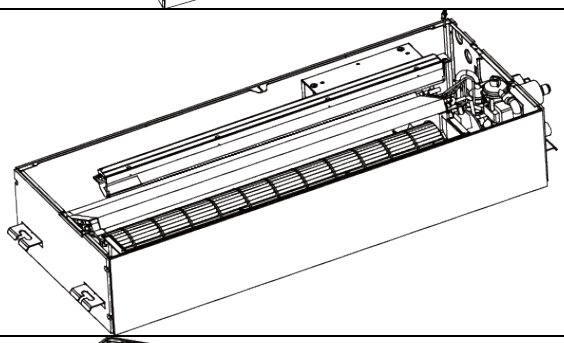	● Remove the volute tongue.
(5) Unscrew the outlet board.	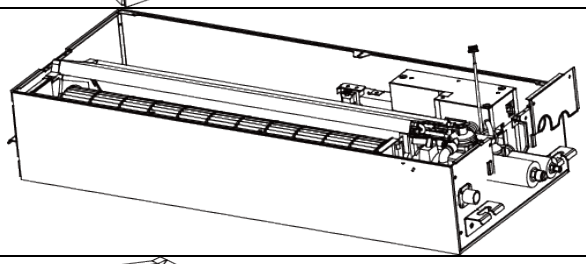	● Use a screwdriver to unscrew the outlet board and then remove the board.
(6) Remove the evaporator.	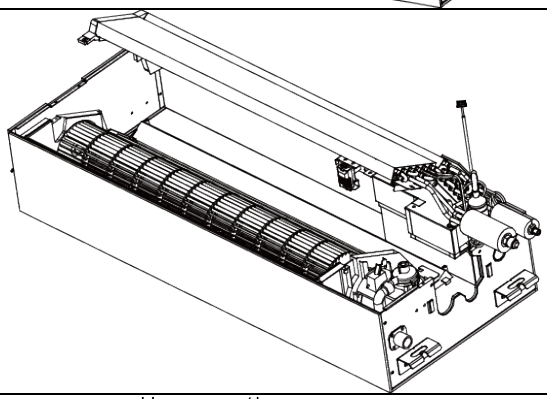	● Remove the evaporator.
(7) Unscrew the motor pressing board.	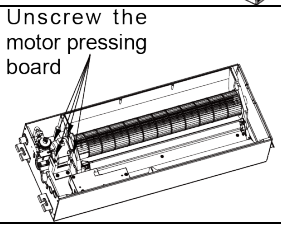	● Use a screwdriver to unscrew the motor pressing board.
(8) Remove the pressing board and replace the motor.	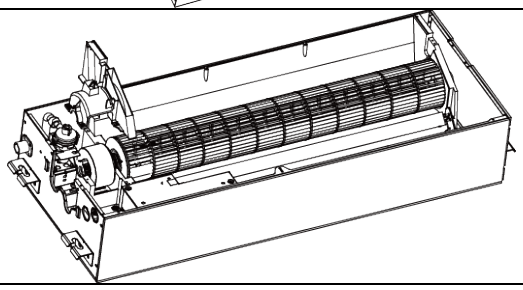	● Remove the pressing board and replace the motor.

Motor and fan		
Step	Diagram	Operation Procedure
(9) Screw the motor pressing board.	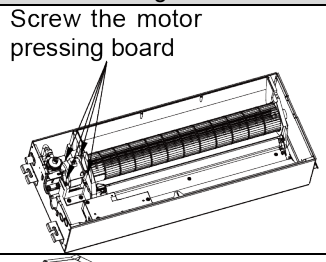	Use a screwdriver to screw the motor pressing board.
(10) Install the evaporator.	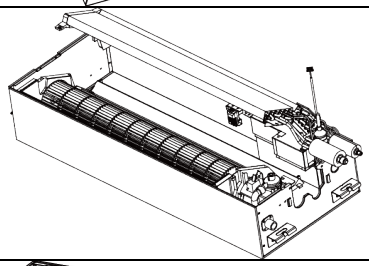	Install the evaporator.
(11) Screw the outlet board.	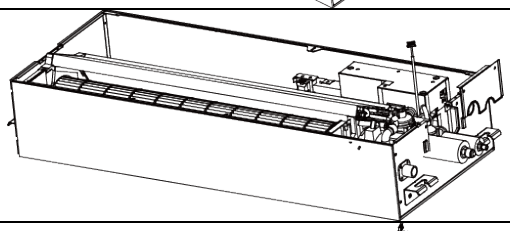	Use a screwdriver to screw the outlet board.
(12) Put the volute tongue back to position.	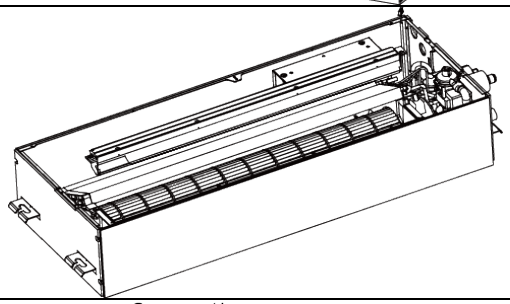	Put the volute tongue back to position.
(13) Screw the volute tongue.	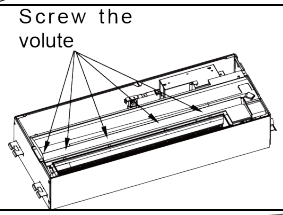	Use a screwdriver to screw the volute tongue.
(14) Install the water tray.		Install the water tray.
(15) Screw the water tray.	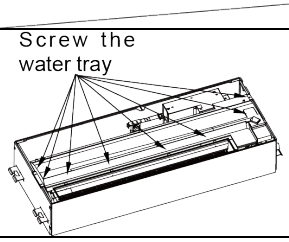	Use a screwdriver to screw the water tray.

4.14 General Static Pressure Duct Type Indoor Unit

NOTICE! The following steps are specific for GMV-ND30PLS/C-T(U) ~ GMV-ND48PLS/C-T(U) units, the assembly and disassembly procedure is similar except the numbers of centrifugal fans and motors.

Motor and fan		
Precondition: The power supply has been disconnected.		
Step	Diagram	Operation Procedure
1. Remove the line connecting to the motor.	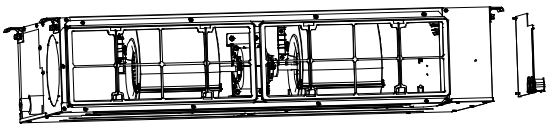	●Use a screwdriver to unscrew the electric box cover. ●Remove from the master board the line connecting to the motor and remove the tie.
2. Remove the filter.	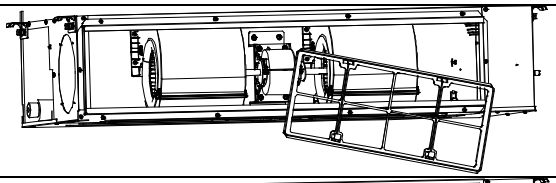	●Remove the filter from the air return frame.
3. Remove the air return cover plate.	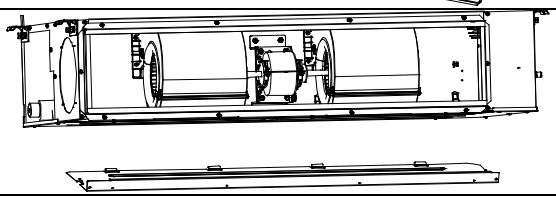	●Use a screwdriver to unscrew the air return cover plate.
4. Remove the rear volute casing.	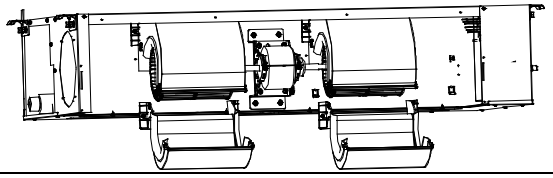	●Loosen the fasteners that connect the rear volute casing with the front volute casing and remove the rear volute casing.
5. Remove the front volute casing.	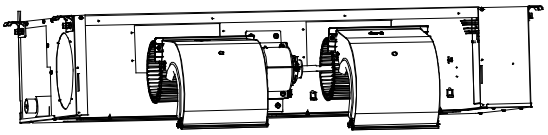	●Use a screwdriver to unscrew the front volute casing and then remove the volute casing.
6. Loosen the centrifugal fan and motor.	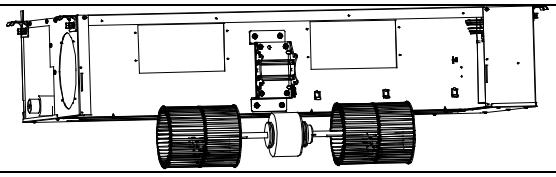	●Use a hexagon to unscrew the centrifugal fan and loosen the fasteners of the motor.
7. Remove the motor.	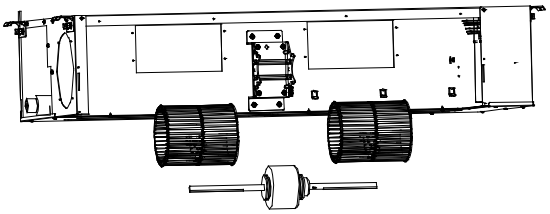	●Remove the motor from the support and remove the centrifugal fan from the motor axle. Then, remove the motor. ●For motors that are accompanied with supports, the supports need removing as well.
8. Install a new motor.	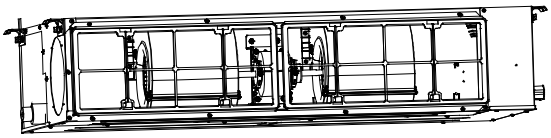	●Assemble units based on the reverse order of this procedure and power on the units for test.

4.15 360°Air Discharge Compact Casssette Type Indoor Unit

Motor and fan		
Step	Diagram	Operation Procedure
1. Remove the front panel.	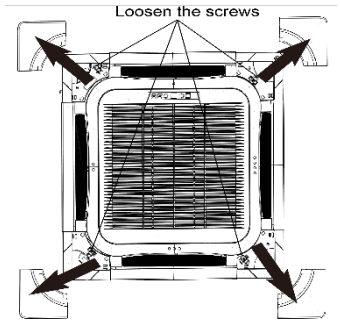 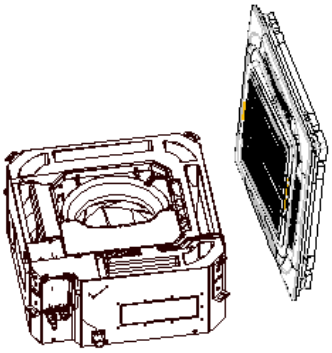	●Turn off the power supply of indoor unit. ●Push the 4 corner plates in the directions shown by the arrows. ●Loosen the screws and remove the front panel.
2. Remove the cover of electric box and the clamp of power cord.	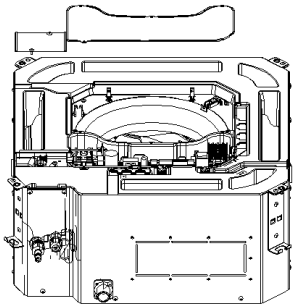	●Remove the motor wire and water pump of the electric box.
4. Remove the water tray.	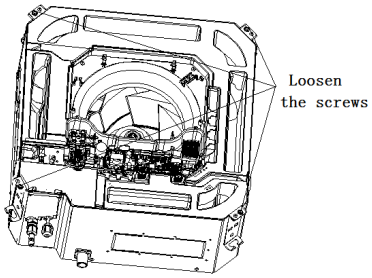 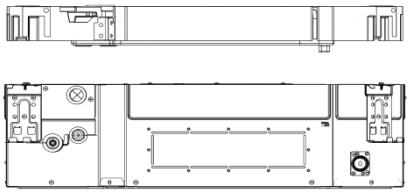	●Loosen the screws in the 4 corners and then remove the water tray.

Motor and fan		
Step	Diagram	Operation Procedure
5. Remove the fan.	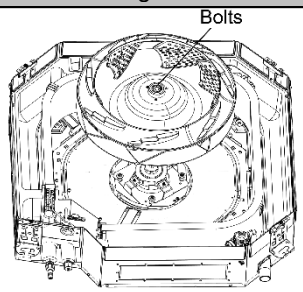	●Use a screwdriver to remove the clamping band of motor. Then remove the fan.
6. Remove motor.	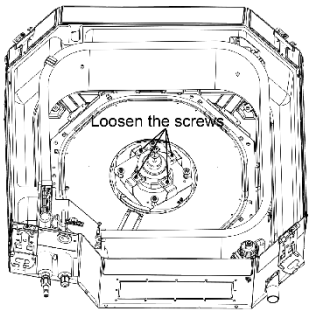 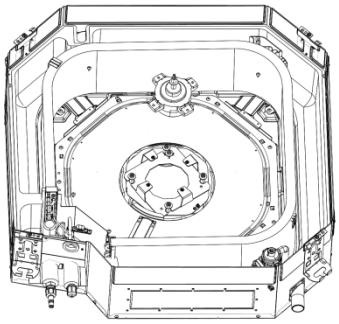	●Use a screwdriver to unscrew the 4 screws of motor. Then remove the motor.
7. Replace and install the motor.	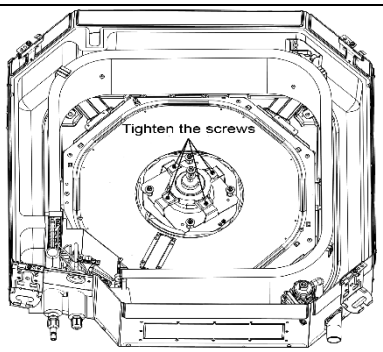	●Remove the motor from motor support and then replace with a new motor. ●Tighten the 4 screws of motor with a screwdriver.
8. Install the fan.	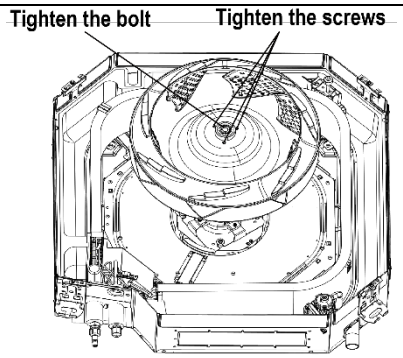	●Direct the hole of fan to the motor shaft and then mount on the fan. ●Tighten the clamping band of motor with a wrench.

Motor and fan		
Step	Diagram	Operation Procedure
9. Install the water tray.	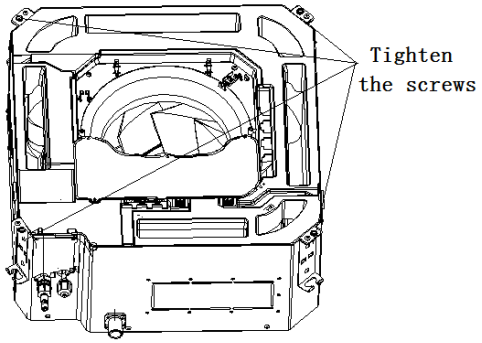	●Direct the 4 corners of water tray to the 4 corners of the unit and then press them. Use a screwdriver to tighten the screws in the 4 corners. ●Connect the power cord and water pump wire. ●Place back the cover of electric box and the clamp of power cord. Then tighten the screws with a screwdriver.

4.16 360°Air Discharge Casssette Type Indoor Unit

Motor and fan		
Step	Diagram	Operation Procedure
1. Remove the front panel.	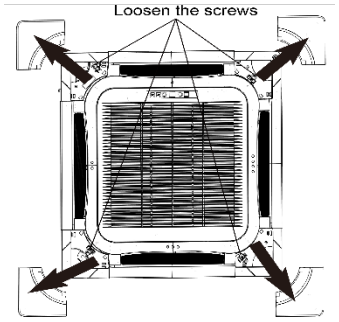 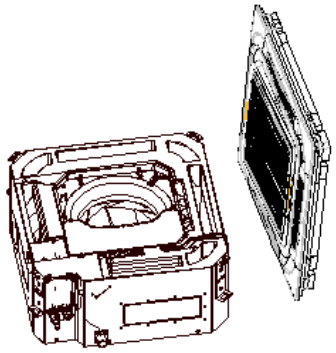	●Turn off the power supply of indoor unit. ●Push the 4 corner plates in the directions shown by the arrows. ●Loosen the screws and remove the front panel.
2. Remove the cover of electric box and the clamp of power cord.	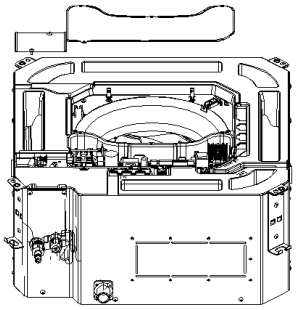	●Remove the motor wire and water pump of the electric box.

Motor and fan		
Step	Diagram	Operation Procedure
4. Remove the water tray.	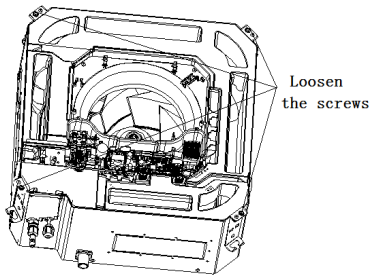 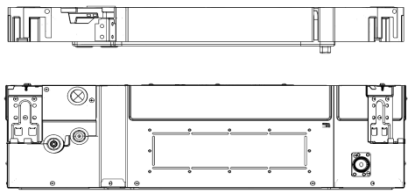	●Loosen the screws in the 4 corners and then remove the water tray.
5. Remove the fan.	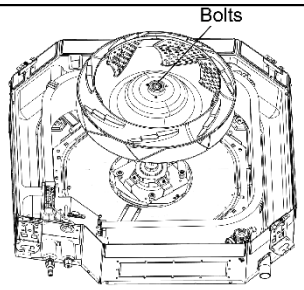	●Use a screwdriver to remove the clamping band of motor. Then remove the fan.
6. Remove motor.	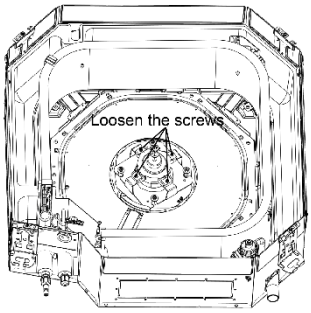 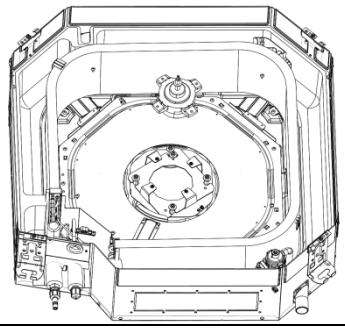	●Use a screwdriver to unscrew the 4 screws of motor. Then remove the motor.
7. Replace and install the motor.	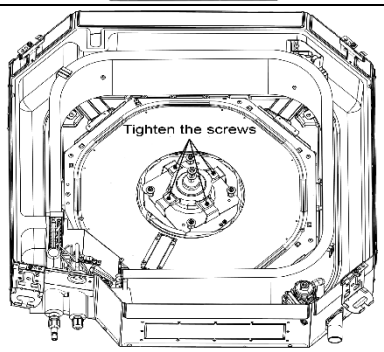	●Remove the motor from motor support and then replace with a new motor. ●Tighten the 4 screws of motor with a screwdriver.

Motor and fan		
Step	Diagram	Operation Procedure
8. Install the fan.	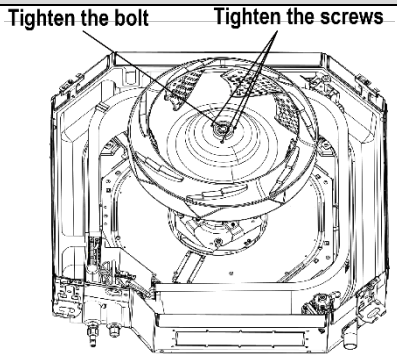	●Direct the hole of fan to the motor shaft and then mount on the fan. ●Tighten the clamping band of motor with a wrench.
9. Install the water tray.	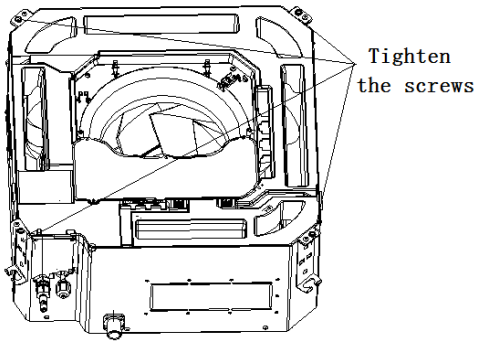	●Direct the 4 corners of water tray to the 4 corners of the unit and then press them. Use a screwdriver to tighten the screws in the 4 corners. ●Connect the power cord and water pump wire. ●Place back the cover of electric box and the clamp of power cord. Then tighten the screws with a screwdriver.

5 Exploded Views and Part List

5.1 Low Static Pressure Duct Type Indoor Unit

Exploded View of GMV-ND07PLS/A-T(U) / GMV-ND09PLS/A-T(U) / GMV-ND12PLS/A-T(U):

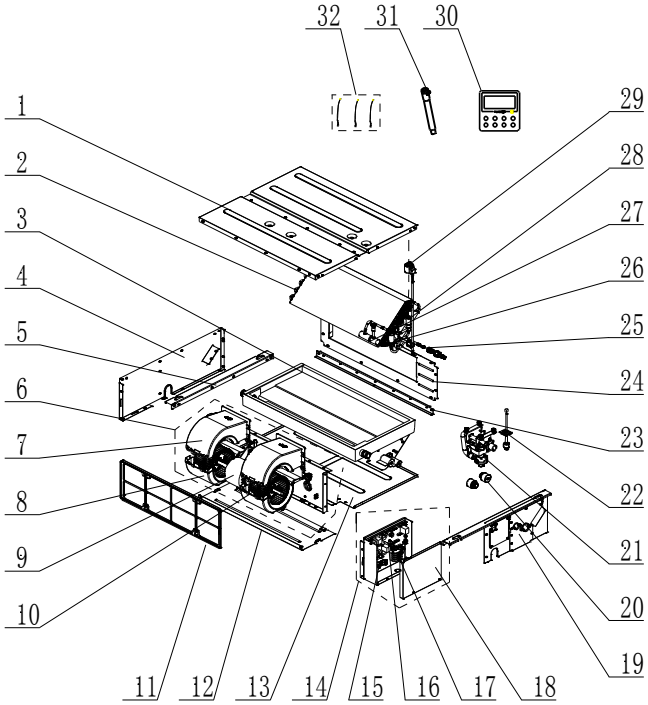

No.	Name of part	For the following unit		For the following unit	
		Unit	Product Code	Unit	Product Code
		GMV-ND07PLS/A-T(U)	CM810N0080	GMV-ND09PLS/A-T(U)	CM810N0090
		/	/	GMV-ND12PLS/A-T(U)	CM810N0100
		Part code	Quantity	Part code	Quantity
1	Top Cover Board Assy	01265325	1	01265325	1
2	Evaporator Assy	01024100155	1	01024100136	1
3	Water Tray Assy	01285332	1	01285332	1
4	Right Side Plate Assy	01315335	1	01315335	1
5	Supporter	01895225	2	01895225	2
6	Centrifugal fan assy	15404100022	1	15404100022	1
7	Front Volute Casing	26905205	2	26905205	2
8	Rear Volute Casing	26905206	2	26905206	2
9	Fan Motor	15704100001	1	15704100001	1
10	Centrifugal Fan	10425200	2	10425200	2
11	Filter Sub-Assy	11725209	1	11725209	1
12	Cover board (Fan motor)	01265300	1	01265300	1
13	Bottom Cover Plate	01265299	1	01265299	1
14	Electric Box Assy	01394100433	1	01394100433	1
15	Terminal Board	4201115402	1	4201115402	1
16	Main Board	30226000029	1	30226000029	1
17	Terminal Board	4201800002601	1	4201800002601	1

No.	Name of part	For the following unit		For the following unit	
		Unit	Product Code	Unit	Product Code
		GMV-ND07PLS/A-T(U)	CM810N0080	GMV-ND09PLS/A-T(U)	CM810N0090
		/	/	GMV-ND12PLS/A-T(U)	CM810N0100
		Part code	Quantity	Part code	Quantity
18	Electric Box Cover	01424100035	1	01424100035	1
19	Left Side Plate Assy	01315200087	1	01315200087	1
20	Choke Plug of Drain Pipe	76815214	2	76815214	2
21	Water Pump	43130324	1	43130324	1
22	Water Level Switch	45020216	1	45020216	1
23	Cover of air outlet	01265298	1	01265298	1
24	Air Outlet Frame Assy	01374636	1	01374636	1
25	Filter Sub-Assy	/	/	/	/
26	Strainer	0741410000601	1	0741410000601	1
27	Strainer	07414100015	1	07414100015	1
28	Electronic Expansion Valve	07334463	1	07334463	1
29	Electric Expand Valve Fitting	4304413215	1	4304413215	1
30	Display Board	30296000040	1	30296000040	1
31	Drain Hose Sub-Assy	05232050	1	05232050	1
32	Sensor Sub-assy	39004168G	1	39004168G	1

Above data is subject to change without notice, please refer the SP in global service website.

Exploded View of GMV-ND14PLS/A-T(U):

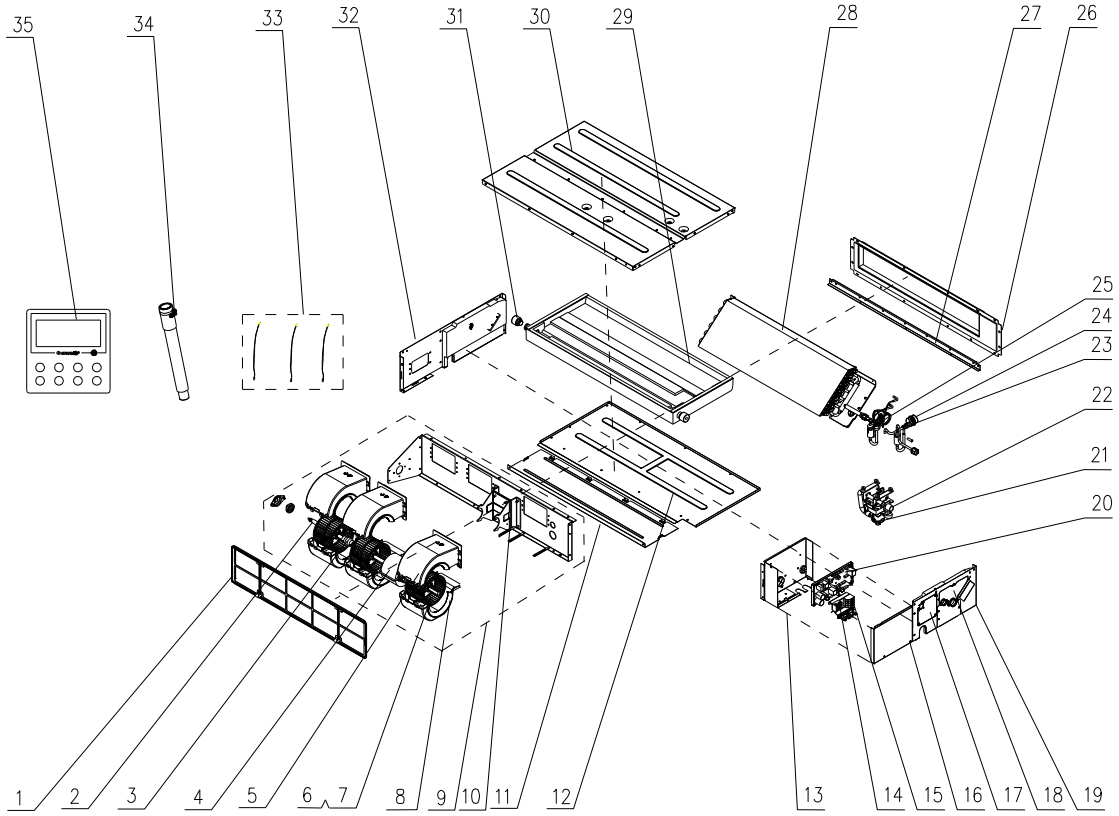

No.	Name of part	For the following unit	
		Unit	Product Code
		GMV-ND14PLS/A-T(U)	CM810N0120
		Part code	Quantity
1	Filter Sub-Assy	11725210	1
2	Rotary Axis Sub-Assy	73018020	1
3	Joint Slack	73018731	1
4	Brushless DC Motor	15704100001	1
5	Front Volute Casing	26905205	3
6	Centrifugal Fan	10425200	3
7	Fan Bearing	76512210	1
8	Rear Volute Casing	26905206	3
9	Centrifugal fan assy	15404100023	1
10	Supporter	01804100140	1
11	Cover board (Fan motor)	01265333	1
12	Bottom Cover Plate	01265332	1
13	Electric Box Assy	01394100433	1
14	Terminal Board	4201115402	1
15	Terminal Board	4201800002601	1
16	Electric Box Cover	01424100035	1
17	Sealplate sub-assy (drainage)	01495315	1
18	Sealplate sub-assy (outlet)	01495316	1
19	Left Side Plate Assy	01315200087	1
20	Main Board	30226000029	1
21	Water Pump	43130324	1
22	Water Level Switch	45020216	1
23	Electronic Expansion Valve	07334466	1
24	Electric Expand Valve Fitting	4304413215	1
25	Strainer	0741410000601	1
26	Air Outlet Frame Assy	01374637	1
27	Cover of Air Outlet	01265331	1
28	Evaporator Assy	01024100110	1
29	Water Tray Assy	01285333	1
30	Top Cover Board Assy	01265328	1
31	Choke Plug of Drain Pipe	76815214	2
32	Right Side Plate Assy	01305263	1
33	Sensor Sub-assy	39004168G	1
34	Drain Hose Sub-Assy	05232050	1
35	Display Board	30296000040	1

Above data is subject to change without notice, please refer the SP in global service website.

Exploded View of GMV-ND18PLS/A-T(U) / GMV-ND22PLS/A-T(U):

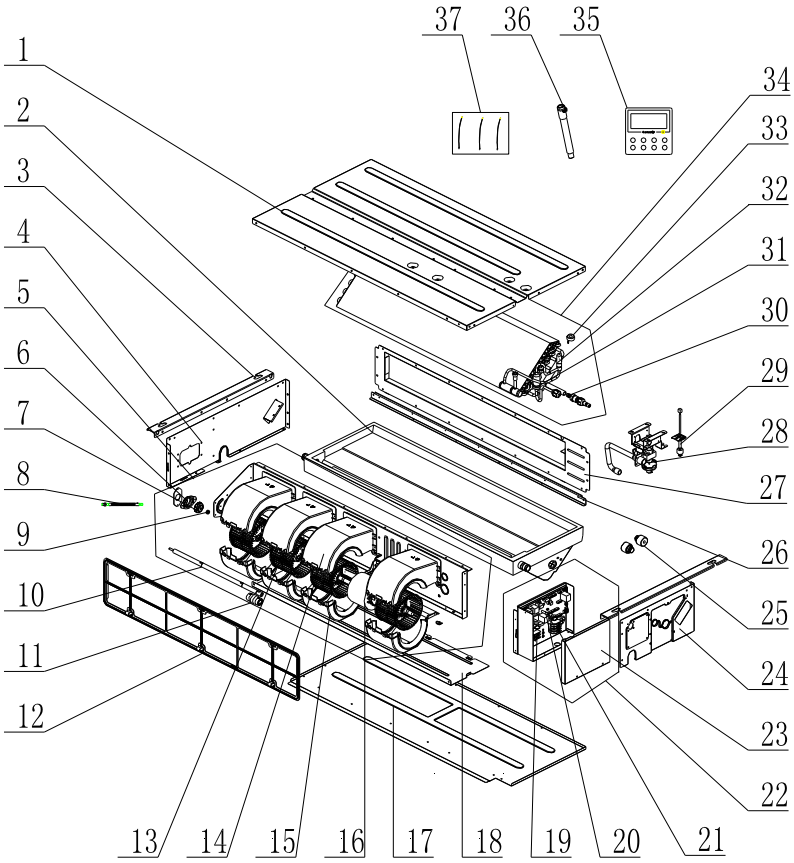

No.	Name of part	For the following unit	
		Unit	Product Code
		GMV-ND18PLS/A-T(U)	CM810N0070
		GMV-ND22PLS/A-T(U)	CM810N0110
		Part code	Quantity
1	Lower Cover Plate Sub-Assy	01265339	1
2	Water Tray Assy	01285334	1
3	Supporter	01895225	2
4	Right Side Plate Assy	01305263	1
5	Centrifugal fan assy	15404100024	1
6	Support Of Motor Bearing	01792408	1
7	O-Gasket of Bearing	76512404	1
8	Corrugated Pipe	05015408	1
9	Fan Bearing	76512210	1
10	Rotary Axis Sub-Assy	73018000029	1
11	Joint Slack	73018731	1
12	Filter Sub-Assy	11725208	1
13	Centrifugal Fan	10425200	4
14	Front Volute Casing	26905205	4
15	Rear Volute Casing	26905206	4
16	Fan Motor	15704100001	1

No.	Name of part	For the following unit	
		Unit	Product Code
		GMV-ND18PLS/A-T(U)	CM810N0070
		GMV-ND22PLS/A-T(U)	CM810N0110
		Part code	Quantity
17	Bottom Cover Plate	01265337	1
18	Cover board (Fan motor)	01265338	1
19	Terminal Board	4201115402	1
20	Main Board	30226000029	1
21	Terminal Board	4201800002601	1
22	Electric Box Assy	01394100433	1
23	Electric Box Cover	01424100035	1
24	Left Side Plate Assy	01315200087	1
25	Choke Plug of Drain Pipe	76815214	2
26	Cover of Air Outlet	01265335	1
27	Air Outlet Frame Assy	01374635	1
28	Water Pump	43130324	1
29	Water Level Switch	45020216	1
30	Filter Sub-Assy	07210028	1
31	Strainer	0741410000601	1
32	Electronic Expansion Valve	07334466	1
33	Electric Expand Valve Fitting	4304413215	1
34	Evaporator Assy	01024100133	1
35	Display Board	30296000040	1
36	Drain Hose Sub-Assy	05232050	1
37	Sensor Sub-assy	39004168G	1

Above data is subject to change without notice, please refer the SP in global service website.

Exploded View of GMV-ND05PLS/B1-T(U)

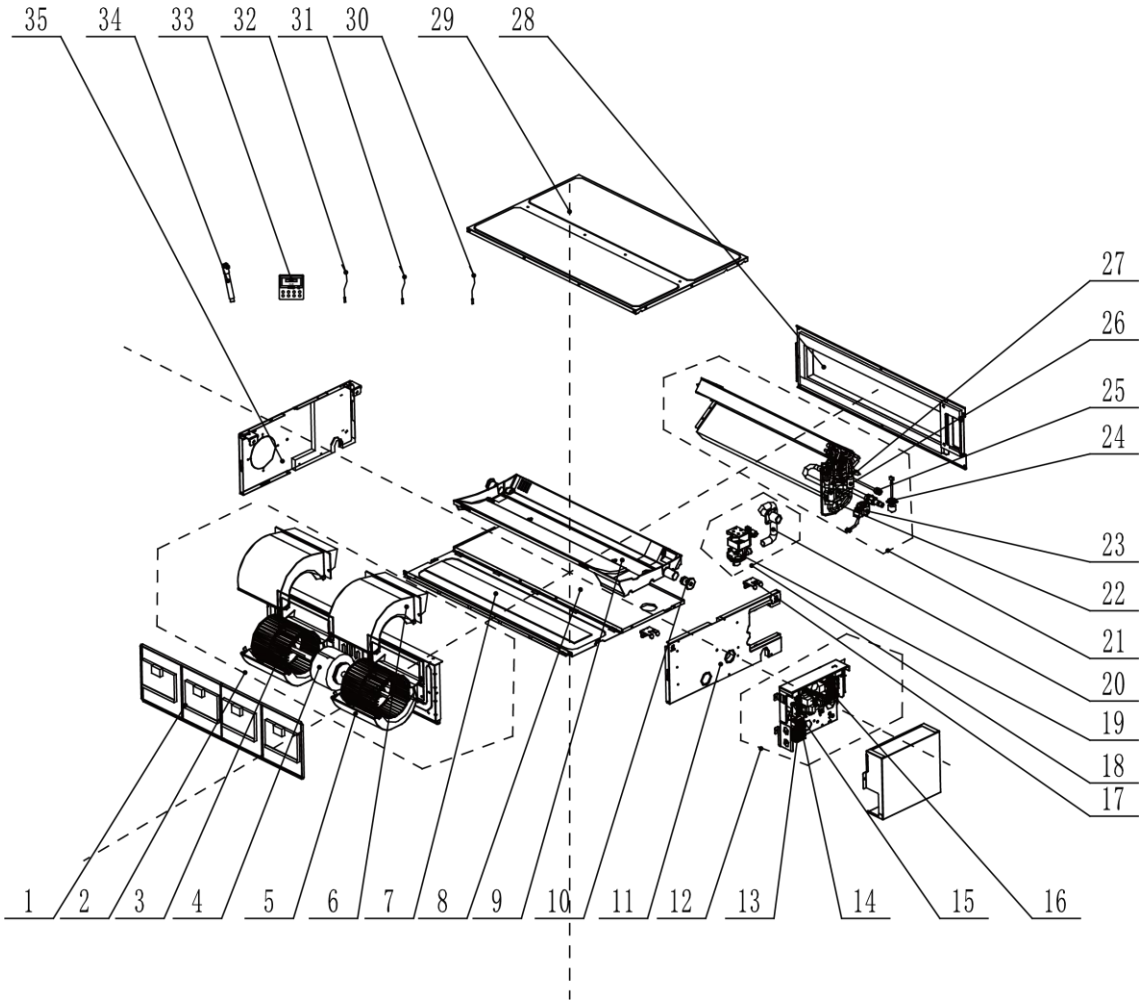

No.	Name of part	For the following unit	
		Unit	Product Code
		GMV-ND05PLS/B1-T(U)	CM810N2170
		GMV-ND07PLS/B1-T(U)	CM810N2170
		GMV-ND09PLS/B1-T(U)	CM810N2170
		Part code	Quantity
1	Filter Sub-Assy	111001000082	1
2	Centrifugal fan assy	000052060087	1
3	Centrifugal Fan	10425200003	2
4	Brushless DC Motor	150104060010	1
5	Propeller Housing(Lower)	26905200019	2
6	Propeller Housing(Upper)	26905200018	2
7	Cover Plate(Air return)	01265200057	1
8	Bottom Cover Plate Assy	01265200065	1
9	Water Tray	26905200023	1
10	Rubber Plug	76815200002	2
11	Left Side Plate	012055000011	1
12	Electric Box Assy	100002069979	2
13	Terminal Board	4201110602	1
14	Terminal Board	42200006000401	1

No.	Name of part	For the following unit	
		Unit	Product Code
		GMV-ND05PLS/B1-T(U)	CM810N2170
		GMV-ND07PLS/B1-T(U)	CM810N2170
		GMV-ND09PLS/B1-T(U)	CM810N2170
		Part code	Quantity
15	Main Board	300002060297	1
16	Main Board	300002060966	1
17	Hook 2	01344100034	2
18	Water Pump Assy	000104060009	1
19	Water Pump	812007060016	1
20	Drainage Pipe(Rubber)	760022000001	1
21	Evaporator Assy	011001060787	1
22	Strainer	0721200102	1
23	Electric Expand Valve Fitting	4304000111	1
24	Water Level Switch	430024060005	1
25	Sealing Cap(Pressure Warning)	26112192	1
26	Strainer	07213050	1
27	Electronic Expansion Valve	072009000006	1
28	Air Outlet Frame Assy	01374100057	1
29	Top Cover Board Sub-assy	01265200067	1
30	Temperature Sensor	390000595	1
31	Temperature Sensor	3900005910	1
32	Temperature Sensor	390000456	1
33	Display Board	30296000040	1
34	Drain Hose Sub-Assy	007008000001	1
35	Right Side Plate	01315200042	1

Above data is subject to change without notice,pls refer the SP in global service website.

Exploded View of GMV-ND12PLS/B1-T(U)

No.	Name of part	For the following unit	
		Unit	Product Code
		GMV-ND12PLS/B1-T(U)	CM810N2220
		Part code	Quantity
1	Top Cover Board Assy	111001000082	1
2	Top Cover Board Sub-assy	000052060087	1
3	Centrifugal fan assy	10425200003	2
4	Blower Mounting Plate Sub-Assy	150104060010	1
5	Motor Support	26905200019	2
6	Brushless DC Motor	26905200018	2
7	Hoop	01265200057	1
8	Bar Clasp	01265200065	1
9	Centrifugal Fan	26905200023	1
10	Fan Nesting	76815200002	2
11	Propeller Housing(Upper)	012055000011	1
12	Propeller Housing(Lower)	100002069979	2
13	Right Side Plate Assy	4201110602	1
14	Right Side Plate Sub-Assy	42200006000401	1
15	Right Side Plate	300002060297	1
16	Left Side Plate Assy	300002060966	1
17	Left Side Plate	01344100034	2
18	Cable Cross Loop	000104060009	1
19	Water Level Switch	812007060016	1
20	Cable Cross Loop	760022000001	1
21	Electric Expand Valve Fitting	011001060787	1
22	Temp Sensor Sleeving	0721200102	1
23	Temp Sensor Sleeving	4304000111	1
24	Sealing Cap(Pressure Warning)	430024060005	1
25	Strainer	26112192	1
26	Electronic Expansion Valve	07213050	1
27	Strainer	072009000006	1
28	Temperature Sensor	01374100057	1
29	Temperature Sensor	01265200067	1
30	Water Pump Assy	390000595	1
31	Water Pump	3900005910	1
32	Drainage Pipe(Rubber)	390000456	1
33	Water Tray Assy	30296000040	1
34	Water Tray	007008000001	1
35	Rubber Plug	01315200042	1

Above data is subject to change without notice,pls refer the SP in global service website.

Exploded View of GMV-ND14PLS/B1-T(U)

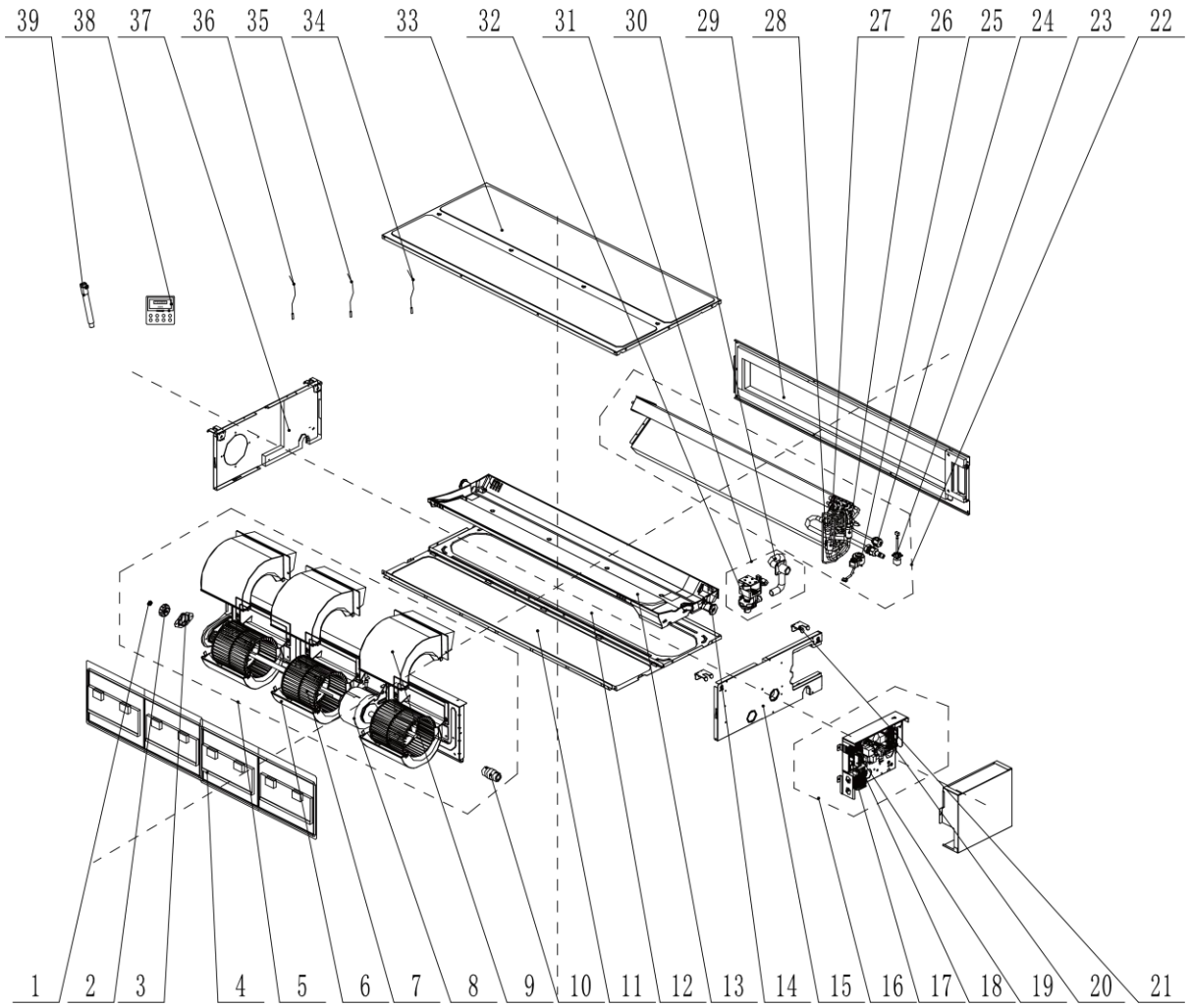

No.	Name of part	For the following unit	
		Unit	Product Code
		GMV-ND14PLS/B1-T(U)	CM810N2200
		Part code	Quantity
1	Top Cover Board Assy	7651221001	1
2	Top Cover Board Sub-assy	26151138	1
3	Top Cover	02285200001	1
4	Blower Mounting Plate Sub-Assy	111001000082	1
5	Brushless DC Motor	000052060087	1
6	Hoop	26905200019	2
7	Bar Clasp	10425200003	2
8	Motor Support	150104060009	1
9	Centrifugal Fan	26905200018	2
10	Fan Nesting	73018731	1
11	Propeller Housing(Upper)	01265200057	1
12	Propeller Housing(Lower)	01265200065	1
13	Joint Slack	26905200023	1
14	Rotary Axis Sub-Assy	76815200002	2
15	Bearing Holder Sub-assy	012055000011	1
16	Bearing Holder	100002069979	2

No.	Name of part	For the following unit	
		Unit	Product Code
		GMV-ND14PLS/B1-T(U)	CM810N2200
		Part code	Quantity
17	Fan Bearing	42200006000401	1
18	Support Of Motor Bearing	4201110602	1
19	Support (shaft)	300002060299	1
20	Right Side Plate Assy	300002060966	1
21	Right Side Plate Sub-Assy	01344100034	2
22	Right Side Plate	011001060790	1
23	Left Side Plate Assy	430024060005	1
24	Left Side Plate	2611219201	1
25	Cable Cross Loop	4304000111	1
26	Electronic Expansion Valve	07213050	1
27	Sealing Cap(Pressure Warning)	072009000005	1
28	Strainer	0721200102 1	1
29	Temp Sensor Sleeving	01374100058	1
30	Strainer	760022000001	1
31	Temp Sensor Sleeving	000104060009	1
32	Electric Expand Valve Fitting	812007060016	1
33	Cable Cross Loop	01265200070	1
34	Airproof Sealant	390000595	1
35	Water Level Switch	3900005910	1
36	Temperature Sensor	390000456	1
37	Temperature Sensor	01315200042	1
38	Water Pump Assy	30296000040	1
39	Water Pump	007008000001	1

Above data is subject to change without notice,pls refer the SP in global service website.

Exploded View of GMV-ND18PLS/B1-T(U)

No.	Name of part	For the following unit	
		Unit	Product Code
		GMV-ND18PLS/B1-T(U)	CM810N2210
		Part code	Quantity
1	Top Cover Board Assy	7651221001	1
2	Top Cover Board Sub-assy	26151138	1
3	Top Cover	02285200001	1
4	Centrifugal fan assy	111001000082	1
5	Blower Mounting Plate Sub-Assy	000052060087	1
6	Brushless DC Motor	26905200019	2
7	Hoop	10425200003	2
8	Bar Clasp	150104060009	1
9	Motor Support	26905200018	2
10	Centrifugal Fan	73018731	1
11	Fan Nesting	01265200057	1
12	Propeller Housing(Upper)	01265200065	1
13	Propeller Housing(Lower)	26905200023	1
14	Joint Slack	76815200002	2
15	Rotary Axis Sub-Assy	012055000011	1
16	Bearing Holder Sub-assy	100002069979	2
17	Bearing Holder	42200006000401	1
18	Fan Bearing	4201110602	1
19	Support Of Motor Bearing	300002060299	1
20	Support (shaft)	300002060966	1
21	Right Side Plate Assy	01344100034	2
22	Right Side Plate Sub-Assy	011001060790	1
23	Right Side Plate	430024060005	1
24	Left Side Plate Assy	2611219201	1
25	Left Side Plate	4304000111	1
26	Cable Cross Loop	07213050	1
27	Water Level Switch	072009000005	1
28	Evaporator Assy	0721200102 1	1
29	Temp Sensor Sleeving	01374100058	1
30	Temp Sensor Sleeving	760022000001	1
31	Electronic Expansion Valve	000104060009	1
32	Strainer	812007060016	1
33	Sealing Cap(Pressure Warning)	01265200070	1
34	Strainer	390000595	1
35	Electric Expand Valve Fitting	3900005910	1
36	Cable Cross Loop	390000456	1
37	Airproof Sealant	01315200042	1
38	Temperature Sensor	30296000040	1
39	Temperature Sensor	007008000001	1

Above data is subject to change without notice,pls refer the SP in global service website.

Exploded View of GMV-ND24PLS/B1-T(U)

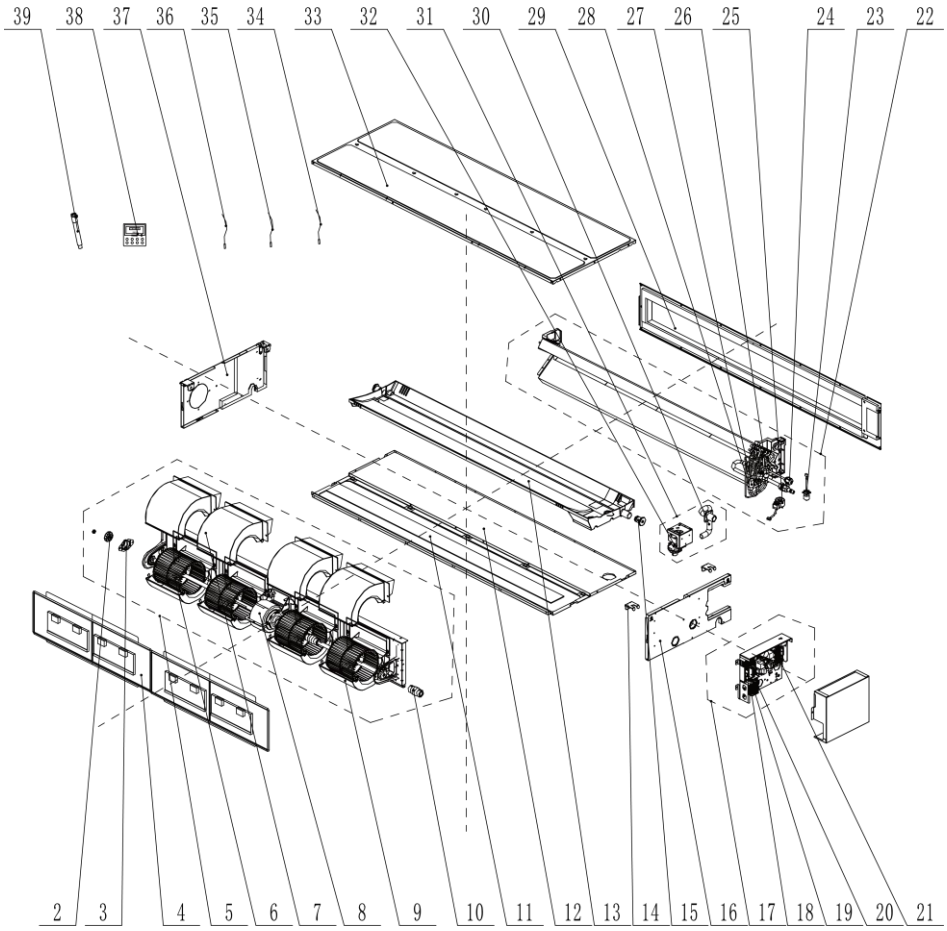

No.	Name of part	For the following unit	
		Unit	Product Code
		GMV-ND24PLS/B1-T(U)	CM810N2230
		Part code	Quantity
1	Top Cover Board Assy	7651221001	1
2	Top Cover Board Sub-assy	26151138	1
3	Top Cover	02285200001	1
4	Centrifugal fan assy	111001000082	1
5	Blower Mounting Plate Sub-Assy	000052060087	1
6	Brushless DC Motor	10425200003	2
7	Hoop	26905200018	2
8	Bar Clasp	150104060011	1
9	Motor Support	26905200019	2
10	Centrifugal Fan	73018731	1
11	Fan Nesting	01265200057	1
12	Propeller Housing(Upper)	01265200065	1
13	Propeller Housing(Lower)	26905200023	1
14	Joint Slack	01344100034	2
15	Rotary Axis Sub-Assy	76815200002	2
16	Bearing Holder Sub-assy	012055000011	1
17	Bearing Holder	100002069979	2
18	Fan Bearing	300002060966	1

No.	Name of part	For the following unit	
		Unit	Product Code
		GMV-ND24PLS/B1-T(U)	CM810N2230
		Part code	Quantity
19	Support Of Motor Bearing	42200006000401	1
20	Support (shaft)	4201110602	1
21	Right Side Plate Assy	300002060300	1
22	Right Side Plate Sub-Assy	011001060790	1
23	Right Side Plate	430024060005	1
24	Left Side Plate Assy	2611219201	1
25	Left Side Plate	4304000111	1
26	Cable Cross Loop	07213050	1
27	Water Level Switch	072009000005	1
28	Evaporator Assy	07212001021	1
29	Temp Sensor Sleeving	01374100058	1
30	Temp Sensor Sleeving	760022000001	1
31	Strainer	000104060009	1
32	Sealing Cap(Pressure Warning)	812007060016	1
33	Strainer	01265200070	1
34	Electronic Expansion Valve	390000595	1
35	Capillary tube	3900005910	1
36	Cable Cross Loop	390000456	1
37	Electric Expand Valve Fitting	01315200042	1
38	Temperature Sensor	30296000040	1
39	Temperature Sensor	007008000001	1

Above data is subject to change without notice,pls refer the SP in global service website.

5.2 Slim Duct Type Indoor Unit

Exploded View of GMV-ND06PLS/B-T(U) / GMV-ND07PLS/B-T(U) / GMV-ND09PLS/B-T(U) / GMV-ND12PLS/B-T(U):

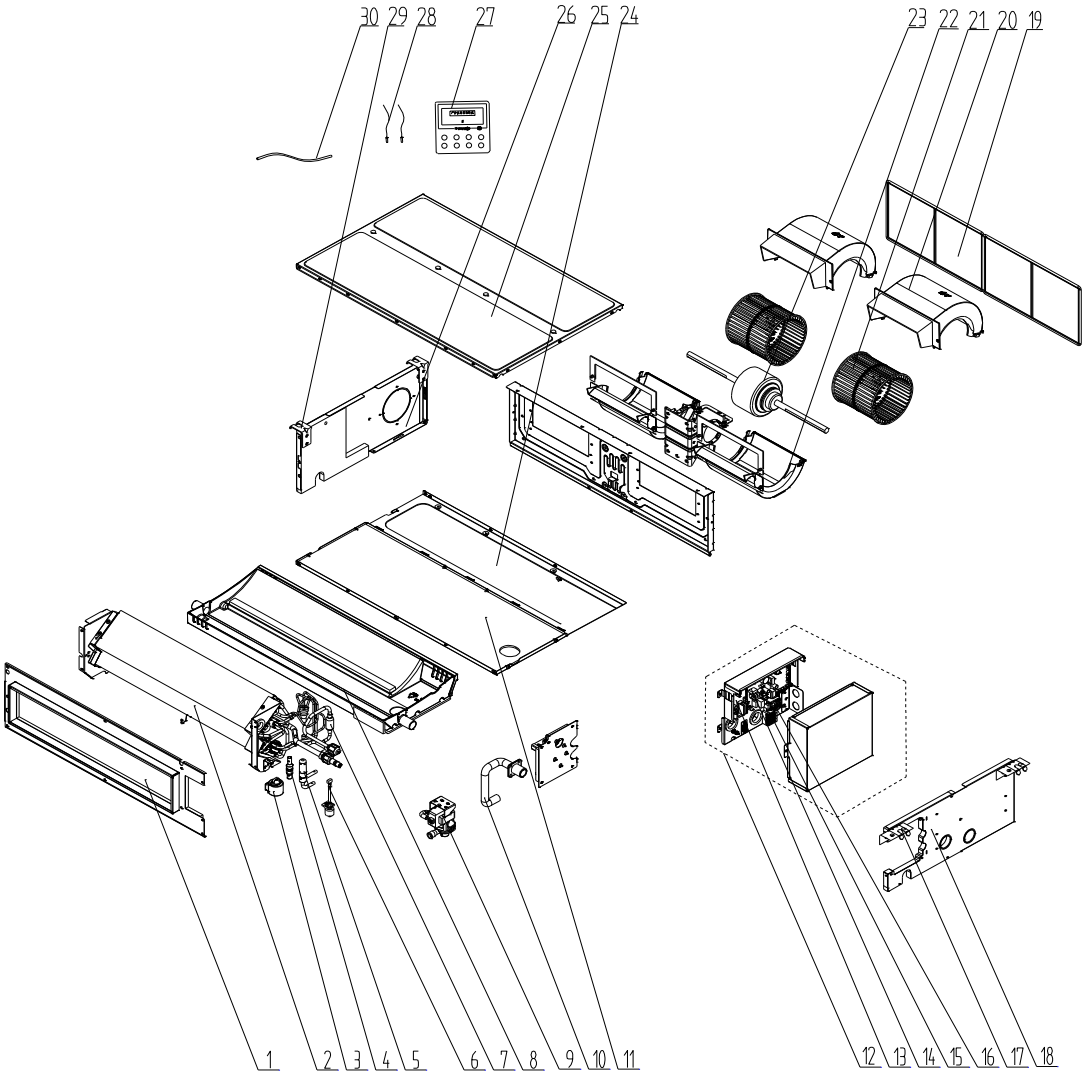

No.	Name of part	For the following unit		For the following unit	
		Unit	Product Code	Unit	Product Code
		GMV-ND06PLS/B-T(U)	CM810N1980	GMV-ND12PLS/B-T(U)	CM810N1700
		GMV-ND07PLS/B-T(U)	CM810N1720		
		GMV-ND09PLS/B-T(U)	CM810N1710		
		Part code	Quantity	Part code	Quantity
1	Air Outlet Frame Assy	000141000012	1	000141000012	1
2	Evaporator Assy	011001000363	1	011001000360	1
3	Electric Expand Valve Fitting	4304413266	1	4304413266	1
4	Strainer	0721200102	1	0721200102	1
5	Electronic Expansion Valve	07334463	1	07334463	1
6	Liquid Level Switch	430024000005	1	430024000005	1
7	Strainer	07213050	1	07213050	1
8	Water Tray Assy	000069000060	1	000069000060	1
9	Water Pump	812007060016	1	812007060016	1
10	Pump Drainpipe	200070000005	1	200070000005	/

No.	Name of part	For the following unit		For the following unit	
		Unit	Product Code	Unit	Product Code
		GMV-ND06PLS/B-T(U)	CM810N1980	GMV-ND12PLS/B-T(U)	CM810N1700
		GMV-ND07PLS/B-T(U)	CM810N1720		
		GMV-ND09PLS/B-T(U)	CM810N1710		
		Part code	Quantity	Part code	Quantity
11	Bottom Cover Plate Assy	000133000012	1	000133000012	1
12	Electric Box Assy	100002062875	1	100002062875	1
13	Main Board	300002060297	1	300002060297	1
14	Main Board	300002060289	1	300002060289	1
15	Terminal Board	42200006000401	1	42200006000401	1
16	Terminal Board	4201110602	1	4201110602	1
17	Hook 2	01344100034	2	01344100034	2
18	Left Side Plate Assy	000080060035	1	000080060035	1
19	Filter Sub-Assy	111001000082	2	111001000082	1
20	Propeller Housing(Upper)	26905200018	2	26905200018	2
21	Centrifugal Fan	10425200003	2	10425200003	2
22	Propeller Housing(Lower)	26905200019	2	26905200019	2
23	Brushless DC Motor	150104060010	1	150104060010	1
24	Cover Plate(Air return)	01265200057	1	01265200057	1
25	Top Cover Board Assy	000132060037	1	000132060037	1
26	Right Side Plate Assy	01314100115	1	01314100115	1
27	Display Board	30296000040	1	30296000040	1
28	Sensor Sub-assy	390002000005	1	390002000005	1
29	Hook	02112446	2	02112446	2
30	Drain Hose Sub-Assy	05232050	1	4202021905	1

Above data is subject to change without notice, please refer the SP in global service website.

Exploded View of GMV-ND14PLS/B-T(U) / GMV-ND18PLS/B-T(U)

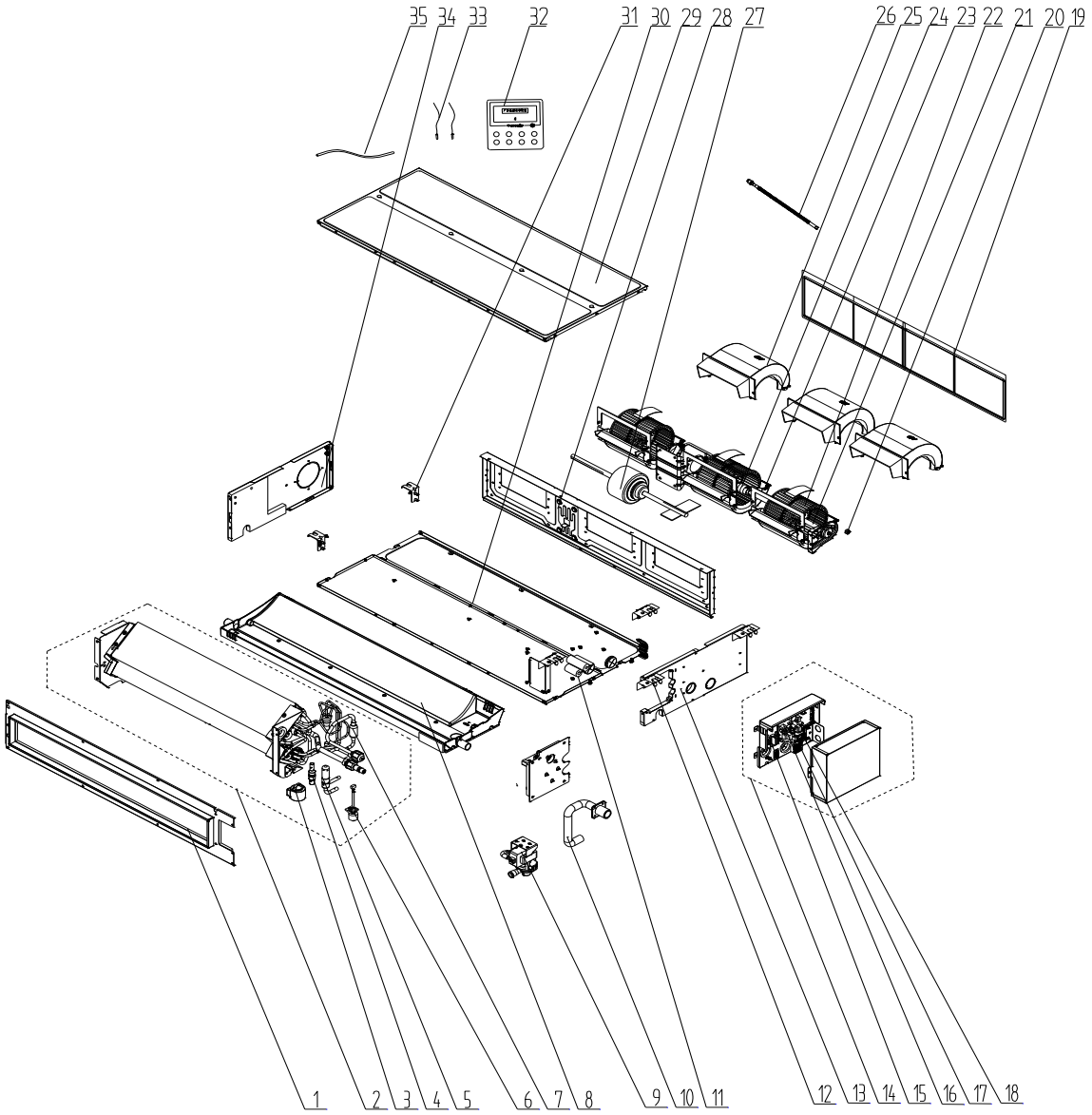

No.	Name of part	For the following unit	
		Unit	Product Code
		GMV-ND14PLS/B-T(U)	CM810N1690
		Part code	Quantity
1	Air Outlet Frame Assy	000141000011	1
2	Evaporator Assy	01100100036201	1
3	Electric Expand Valve Fitting	4304413215	1
4	Strainer	0721200102	1
5	Electronic Expansion Valve	07334466	1
6	Liquid Level Switch	430024000005	1
7	Strainer	07213050	1
8	Water Tray Assy	000069000059	1
9	Water Pump	812007060016	1
10	Pump Drainpipe	200070000005	1
11	Bottom Cover Plate Assy	000133000011	1
12	Hook 2	01344100034	2
13	Left Side Plate Assy	000080060035	1

No.	Name of part	For the following unit	
		Unit	Product Code
		GMV-ND14PLS/B-T(U)	CM810N1690
		Part code	Quantity
14	Electric Box Assy	100002062875	1
15	Main Board	300002060297	1
16	Main Board	300002060289	1
17	Terminal Board	42200006000401	1
18	Terminal Board	4201110602	1
19	Filter Sub-Assy	111253038	2
20	Fan Bearing	76512210	1
21	Rotary Axis Sub-Assy	73018761	1
22	Centrifugal Fan	10425200003	3
23	Propeller Housing(Lower)	26905200019	3
24	Joint Slack	73018731	1
25	Propeller Housing(Upper)	26905200018	3
26	Corrugated Pipe	05015408	0
27	Brushless DC Motor	15010406001001	1
28	Blower Mounting Plate Sub-Assy	01325200035	1
29	Top Cover Board Assy	000132060036	1
30	Cover Of Air-In	01265200073	1
31	Hook	02112446	2
32	Display Board	30296000040	1
33	Sensor Sub-assy	390002000005	1
34	Right Side Plate Assy	01314100115	1
35	Drain Hose Sub-Assy	007008000001	1

Above data is subject to change without notice, please refer the SP in global service website.

No.	Name of part	For the following unit	
		Unit	Product Code
		GMV-ND18PLS/B-T(U)	CM810N1680
		Part code	Quantity
1	Air Outlet Frame Assy	000141000011	1
2	Evaporator Assy	011001000362	1
3	Electric Expand Valve Fitting	4304413266	1
4	Strainer	0721200102	1
5	Electronic Expansion Valve	07334466	1
6	Liquid Level Switch	430024000005	1
7	Strainer	07213050	1
8	Water Tray Assy	000069000059	1
9	Water Pump	812007060016	1
10	Pump Drainpipe	200070000005	1
11	Bottom Cover Plate Assy	000133000011	1
12	Hook 2	01344100034	2
13	Left Side Plate Assy	000080060035	1
14	Electric Box Assy	100002063017	1
15	Main Board	300002060299	1
16	Main Board	300002060289	1
17	Terminal Board	42200006000401	1
18	Terminal Board	4201110602	1
19	Filter Sub-Assy	111253038	2
20	Fan Bearing	76512210	1
21	Rotary Axis Sub-Assy	73018761	1
22	Centrifugal Fan	10425200003	3
23	Propeller Housing(Lower)	26905200019	3
24	Joint Slack	73018731	1
25	Propeller Housing(Upper)	26905200018	3
26	Corrugated Pipe	05015408	1
27	Brushless DC Motor	15010406000901	1
28	Blower Mounting Plate Sub-Assy	01325200035	1
29	Top Cover Board Assy	000132060036	1
30	Cover Of Air-In	01265200073	1
31	Hook	02112446	2
32	Display Board	30296000040	1
33	Sensor Sub-assy	390002000005	1
34	Right Side Plate Assy	01314100115	1
35	Drain Hose Sub-Assy	007008000001	1

Above data is subject to change without notice, please refer the SP in global service website

Exploded View of GMV-ND24PLS/B-T(U)

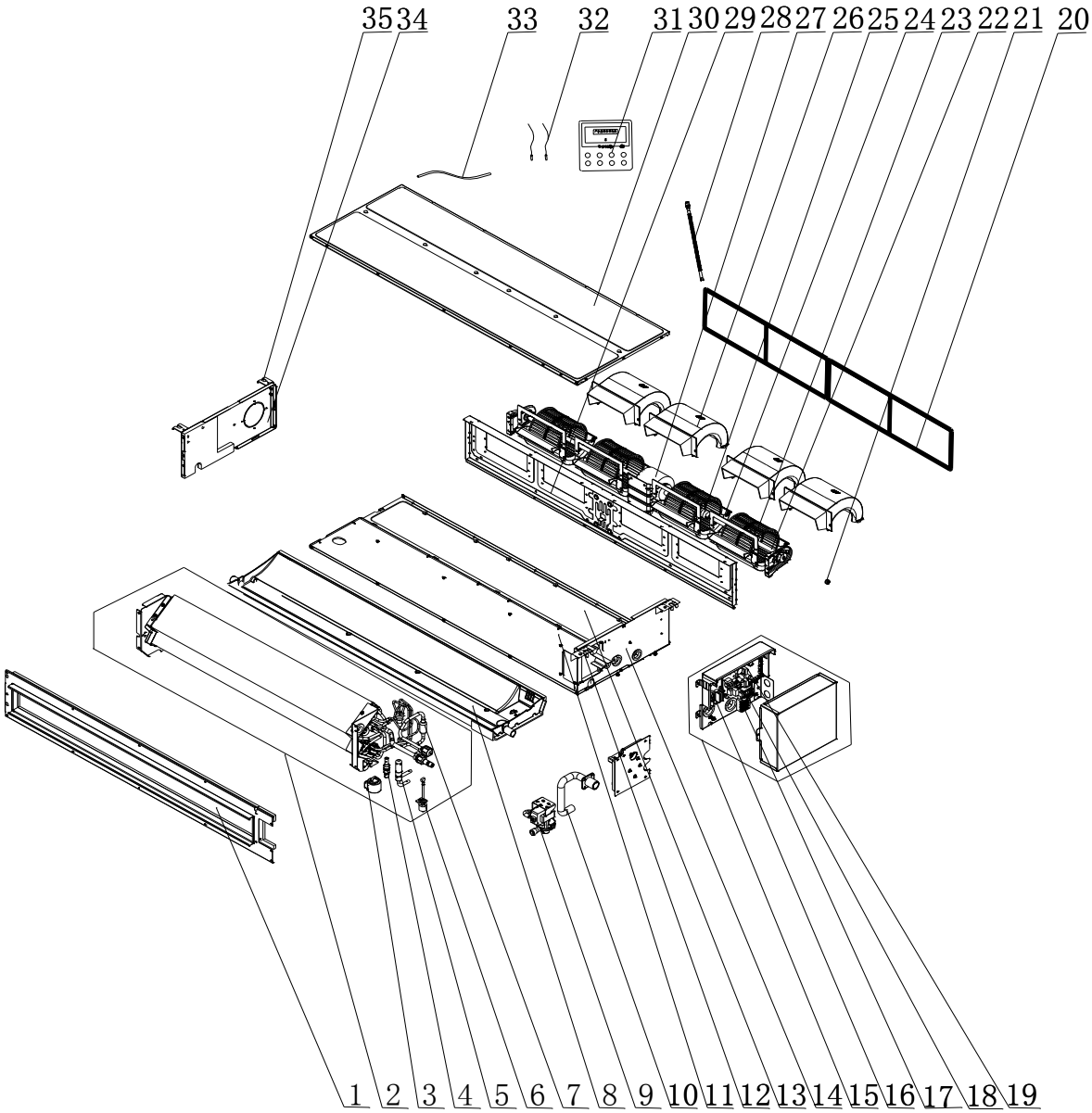

No.	Name of part	For the following unit	
		Unit	Product Code
		GMV-ND24PLS/B-T(U)	CM810N1670
		Part code	Quantity
1	Air Outlet Frame Assy	000141000013	1
2	Evaporator Assy	011001000402	1
3	Electric Expand Valve Fitting	4304413215	1
4	Strainer	0721200102	1
5	Electronic Expansion Valve	07334466	1
6	Liquid Level Switch	430024000005	1
7	Strainer	07213050	1
8	Water Tray Assy	000069000069	1
9	Water Pump	812007060016	1
10	Pump Drainpipe	200070000005	1
11	Bottom Cover Plate Assy	000133000013	1
12	Hook 2	01344100034	2
13	Cover Of Air-In	01265200085	1

No.	Name of part	For the following unit	
		Unit	Product Code
		GMV-ND24PLS/B-T(U)	CM810N1670
		Part code	Quantity
14	Left Side Plate Assy	000080060035	1
15	Electric Box Assy	100002063018	1
16	Main Board	300002060300	1
17	Terminal Board	42200006000401	1
18	Terminal Board	4201110602	1
19	Main Board	300002060289	1
20	Filter Sub-Assy	111253039	2
21	Fan Bearing	76512210	1
22	Rotary Axis Sub-Assy	73018761	2
23	Centrifugal Fan	10425200003	4
24	Propeller Housing(Lower)	26905200019	4
25	Joint Slack	73018731	2
26	Propeller Housing(Upper)	26905200018	4
27	Brushless DC Motor	150104060011	1
28	Corrugated Pipe	05015408	1
29	Blower Mounting Plate Sub-Assy	01325200053	1
30	Top Cover Board Assy	00013206003501	1
31	Display Board	30296000040	1
32	Sensor Sub-assy	390002000005	1
33	Drain Hose Sub-Assy	05232050	1
34	Right Side Plate Assy	01314100115	1
35	Hook	02112446	2

Above data is subject to change without notice, please refer the SP in global service website

5.3 Four-way Cassette Type Indoor Unit

Exploded View of GMV-ND07T/A-T(U):

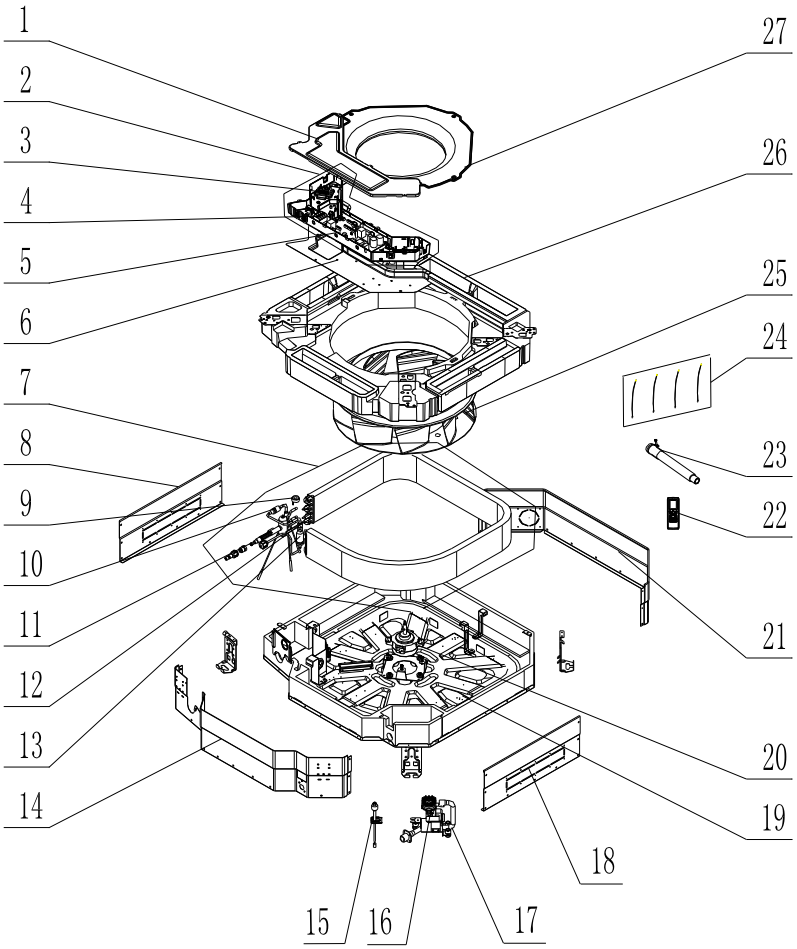

No.	Name of part	For the following unit	
		Unit	Product Code
		GMV-ND07T/A-T(U)	CM500N0520
		Part code	Quantity
1	Electric Box cover	0142410004801	1
2	Electric Box Assy	01394100434	1
3	Terminal Board	42011222	1
4	Terminal Board	4201800002601	1
5	Main Board	30226000029	1
6	Electric base plate	01412721	1
7	Evaporator Assy	01024100135	1
8	Left Side Plate	01302733	1
9	Electric Expand Valve Fitting	4304413215	1
10	Strainer	07415200002	1
11	Filter Sub-Assy	/	/
12	Electronic Expansion Valve	07334463	1
13	Strainer	07414100006	1

No.	Name of part	For the following unit	
		Unit	Product Code
		GMV-ND07T/A-T(U)	CM500N0520
		Part code	Quantity
14	Front Side Plate	01302731	1
15	Water Level Switch	45020216	1
16	Water Pump	43138000068	1
17	Pump Drainpipe	05232721	1
18	Right Side Plate	01302734	1
19	Base Plate Assy	01222701	1
20	Brushless DC Motor	15704100007	1
21	Rear Side Plate	01302732	1
22	Remote Controller	30510589	1
23	Drain Hose Sub-Assy	05232050	1
24	Sensor Sub-assy	39008000013G	1
25	Centrifugal Fan	10312721	1
26	Water Tray Assy	01289400013	1
27	Diversion Circle	10372701	1

Above data is subject to change without notice, please refer the SP in global service website.

Exploded View of GMV-ND09T/A-T(U) / GMV-ND12T/A-T(U) / GMV-ND15T/A-T(U) / GMV-ND18T/A-T(U) / GMV-ND24T/A-T(U) / GMV-ND30T/A-T(U) / GMV-ND36T/A-T(U) / GMV-ND42T/A-T(U) / GMV-ND48T/A-T(U):

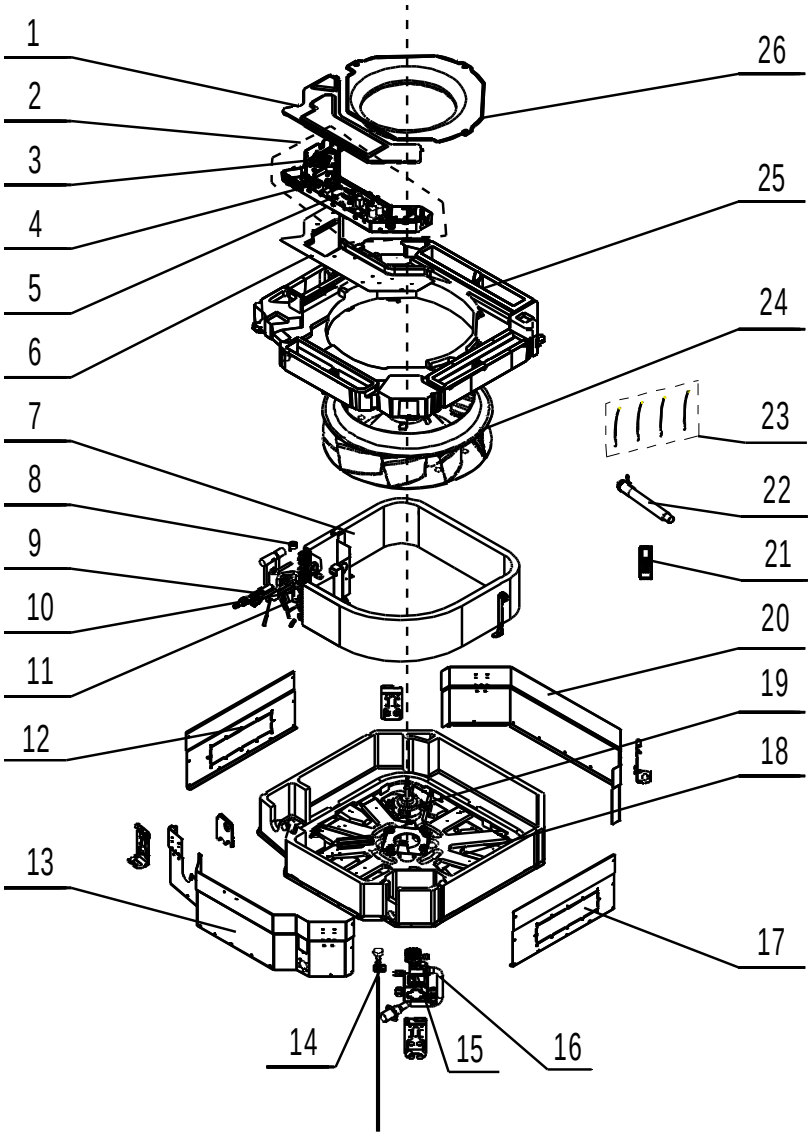

No.	Name of part	For the following unit		For the following unit	
		Unit	Product Code	Unit	Product Code
		GMV-ND09T/A-T(U)	CM500N0530	GMV-ND15T/A-T(U)	CM500N0670
		GMV-ND12T/A-T(U)	CM500N0540	GMV-ND18T/A-T(U)	CM500N0510
		/	/	GMV-ND24T/A-T(U)	CM500N0550
		Part code	Quantity	Part code	Quantity
1	Electric Box Cover	0142410004801	1	0142410004801	1
2	Electric Box Assy	01394100434	1	01394100434	1
3	Terminal Board	42011222	1	42011222	1
4	Terminal Board	4201800002601	1	4201800002601	1
5	Main Board	30226000029	1	30226000029	1
6	Electric Base Plate	01412721	1	01412721	1
7	Evaporator Assy	0102410013401	1	01024100134	1

No.	Name of part	For the following unit		For the following unit	
		Unit	Product Code	Unit	Product Code
		GMV-ND09T/A-T(U)	CM500N0530	GMV-ND15T/A-T(U)	CM500N0670
		GMV-ND12T/A-T(U)	CM500N0540	GMV-ND18T/A-T(U)	CM500N0510
		/	/	GMV-ND24T/A-T(U)	CM500N0550
		Part code	Quantity	Part code	Quantity
8	Electric Expand Valve Fitting	4304413215	1	4304413215	1
9	Corrugated Pipe	05025134	1	05015408	1
10	Strainer	0741410000601	1	0741410000601	1
11	Electronic Expansion Valve	07334466	1	07334466	1
12	Left Side Plate	01302705	1	01302705	1
13	Front Side Plate	01302701	1	01302701	1
14	Water Level Switch	45020216	1	45020216	1
15	Water Pump	43138000068	1	43138000068	1
16	Pump Drainpipe	05230026	1	05230026	1
17	Right Side Plate	01302707	1	01302707	1
18	Base Plate Assy	01222701	1	01222701	1
19	Brushless DC Motor	15709400004	1	15709400004	1
20	Rear Side Plate	01302703	1	01302703	1
21	Remote Controller	30510589	1	30510589	1
22	Drain Hose Sub-Assy	05232702	1	05232702	1
23	Sensor Sub-assy	39008000013G	1	39008000013G	1
24	Centrifugal Fan	10312705	1	10312705	1
25	Water Tray Assy	01289400013	1	01289400013	1
26	Diversion Circle	10372701	1	10372701	1

Above data is subject to change without notice, please refer the SP in global service website.

No.	Name of part	For the following unit	
		Unit	Product Code
		GMV-ND30T/A-T(U)	CM500N0560
		GMV-ND36T/A-T(U)	CM500N0570
		GMV-ND42T/A-T(U)	CM500N0580
		GMV-ND48T/A-T(U)	CM500N0590
		Part code	Quantity
1	Electric Box Cover	0142410004801	1
2	Electric Box Assy	01394100434	1
3	Terminal Board	42011222	1
4	Terminal Board	4201800002601	1
5	Main Board	30226000029	1
6	Electric Base Plate	01412721	1
7	Evaporator Assy	01024100116	1
8	Electric Expand Valve Fitting	01302733	1
9	Corrugated Pipe	4304413215	1
10	Strainer	0741410000601	1
11	Electronic Expansion Valve	07334468	1
12	Left Side Plate	01302725	1
13	Front Side Plate	01302721	1
14	Water Level Switch	45020216	1
15	Water Pump	43138000068	1
16	Pump Drainpipe	05230026	1
17	Right Side Plate	01302727	1
18	Base Plate Assy	01222701	1
19	Brushless DC Motor	15709400003	1
20	Rear Side Plate	01302723	1
21	Remote Controller	30510589	1
22	Drain Hose Sub-Assy	05232702	1
23	Sensor Sub-assy	39008000013G	1
24	Centrifugal Fan	10310101	1
25	Water Tray Assy	01289400013	1
26	Diversion Circle	10372722	1

Above data is subject to change without notice, please refer the SP in global service website.

5.4 High Static Pressure Duct Type Indoor Unit

Exploded View of GMV-ND18PHS/A-T(U) / GMV-ND24PHS/A-T(U):

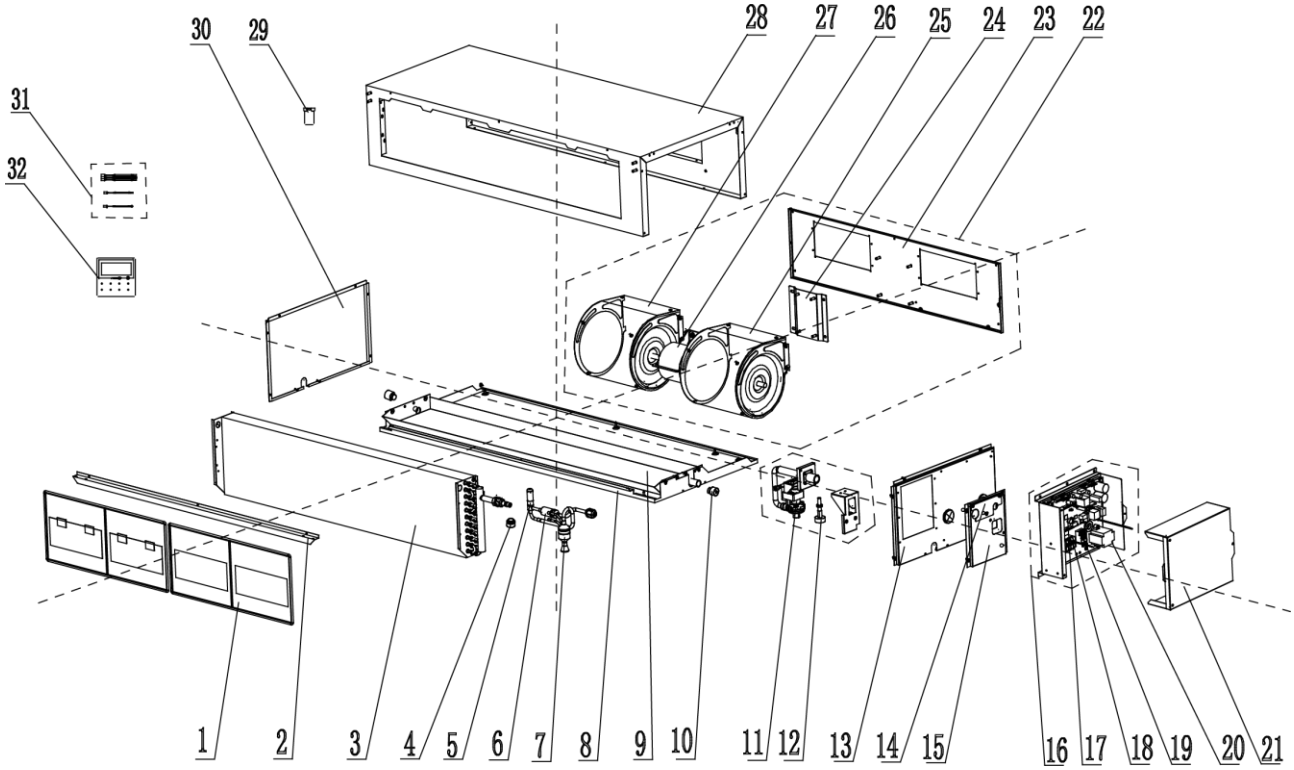

No.	Name of part	For the following unit	
		Unit	Product Code
		GMV-ND18PHS/A-T(U)	CM810N0140
		GMV-ND24PHS/A-T(U)	CM810N0150
		Part code	Quantity
1	Filter Sub-Assy	11125303	2
2	Guide groove of the filter screen	02285301	1
3	Evaporator Assy	01024100090	1
4	Electric Expand Valve Fitting	4304413215	1
5	Electronic Expansion Valve	07334466	1
6	Strainer	0741410000601	1
7	Filter	07415210	1
8	Lower Cover Plate Sub-Assy	01265304	1
9	Water Tray Assy	01285317	1
10	Choke Plug of Drain Pipe	76712455	2
11	Water Pump	4313822001	1
12	Water Level Switch	450127011	1
13	Right Side Plate	01314100063	1
14	Seal plate'	01494100008	1
15	Cover Plate	01264100036	1
16	Electric Box Assy	01394100501	1

No.	Name of part	For the following unit	
		Unit	Product Code
		GMV-ND18PHS/A-T(U)	CM810N0140
		GMV-ND24PHS/A-T(U)	CM810N0150
		Part code	Quantity
17	Main Board	30226000027	1
18	Terminal Board	4201800002601	1
19	Terminal Board	4201115402	1
20	Inductance	43128000014	1
21	Electric Box Cover	01424100132	1
22	Centrifugal fan assy	15405200029	1
23	Blower Mounting Plate Sub-Assy	01325200039	1
24	Supporter	01804100140	1
25	Blower	15012454	1
26	Brushless DC Motor	15705200006	1
27	Blower	15012458	1
28	Top Cover Board Assy	01265226	1
29	Hook	02112446	4
30	Left Side Plate Assy	01314155	1
31	Sensor Sub-assy	39004169G	1
32	Display Board	30296000040	1

Above data is subject to change without notice, please refer the SP in global service website.

Exploded View of GMV-ND30PHS/A-T(U) / GMV-ND36PHS/A-T(U) / GMV-ND42PHS/A-T(U) / GMV-ND48PHS/A-T(U):

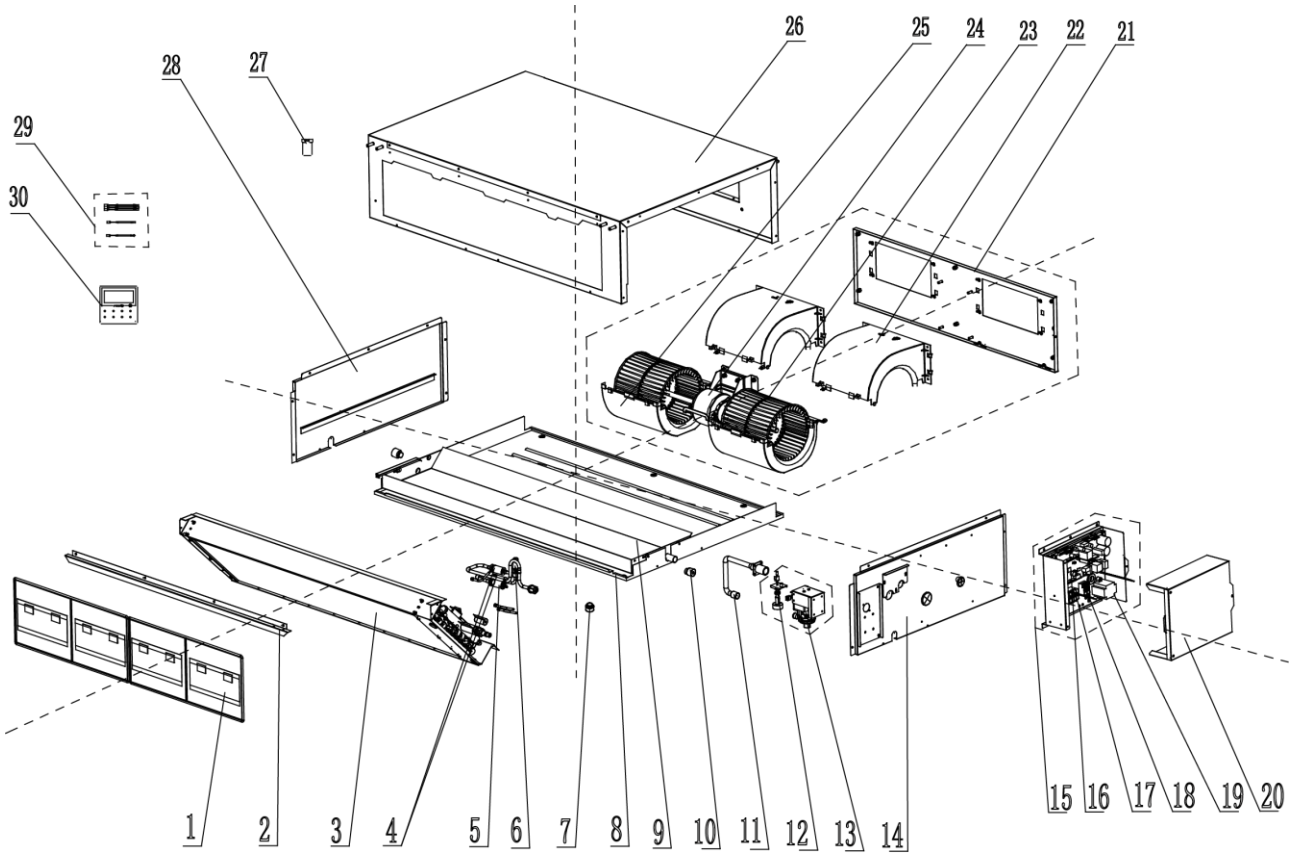

No.	Name of part	For the following unit	
		Unit	Product Code
		GMV-ND30PHS/A-T(U)	CM810N0160
		GMV-ND36PHS/A-T(U)	CM810N0170
		GMV-ND42PHS/A-T(U)	CM810N0180
		GMV-ND48PHS/A-T(U)	CM810N0190
		Part code	Quantity
1	Filter Sub-Assy	111253031	2
2	Side Plate of Air intake	01375301	1
3	Evaporator Assy	01024100077	1
4	Strainer	0741410000601	2
5	Strainer	07220005	1
6	Electronic Expansion Valve	07334468	1
7	Electric Expand Valve Fitting	4304413215	1
8	Lower Cover Plate Sub-Assy	15265301	1
9	Water Tray Assy	01285323	1
10	Choke Plug of Drain Pipe	76712455	2
11	Pump Drainpipe	05235301	1
12	Water Level Switch	45018012	1
13	Water Pump	43138220	1
14	Right Side Plate Sub-Assy	01315200100	1

No.	Name of part	For the following unit	
		Unit	Product Code
		GMV-ND30PHS/A-T(U)	CM810N0160
		GMV-ND36PHS/A-T(U)	CM810N0170
		GMV-ND42PHS/A-T(U)	CM810N0180
		GMV-ND48PHS/A-T(U)	CM810N0190
		Part code	Quantity
15	Electric Box Assy	01394100501	1
16	Main Board	30226000027	1
17	Terminal Board	4201800002601	1
18	Terminal Board	4201115402	1
19	Inductance	43128000014	1
20	Electric Box Cover	01424100132	1
21	Blower Mounting Plate Sub-Assy	01325200044	1
22	Propeller Housing(Upper)	26904100051	2
23	Centrifugal Fan	10424100001	2
24	Brushless DC Motor	15709400006	1
25	Propeller Housing(Lower)	26904100052	2
26	Top Cover Board Assy	01264100039	1
27	Hook	02112466	4
28	Left Side Plate Assy	01315306	1
29	Sensor Sub-assy	39004169G	1
30	Display Board	30296000040	1

Above data is subject to change without notice, please refer the SP in global service website.

Exploded View of GMV-ND72PH/A-T(U) / GMV-ND96PH/A-T(U):

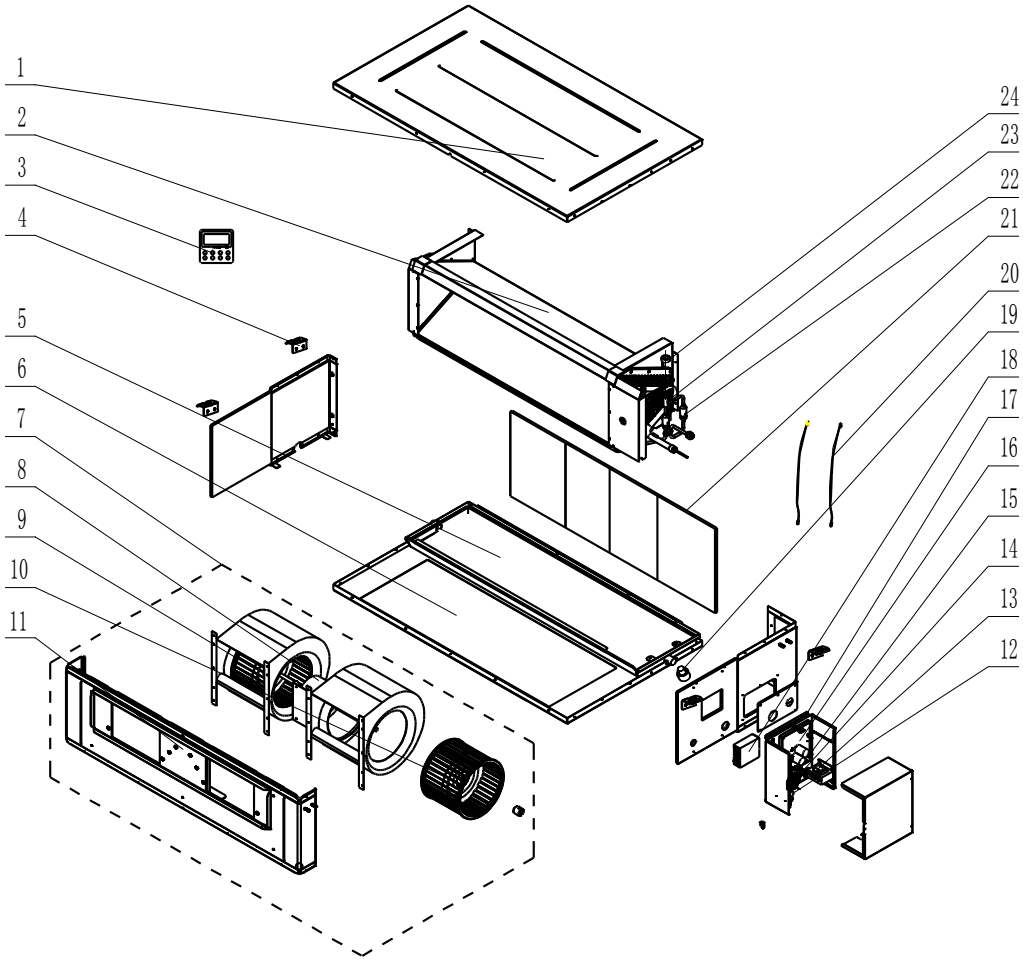

No.	Name of part	For the following unit		For the following unit	
		Unit	Product Code	Unit	Product Code
		GMV-ND72PH/A-T(U)	CM810N0280	GMV-ND96PH/A-T(U)	CM810N0290
		Part code	Quantity	Part code	Quantity
1	Top Cover Board Assy	01264100086	1	01264100090	1
2	Evaporator Assy	01024100119	1	01024100124	1
3	Display Board	30296000040	1	30296000040	1
4	Hook	02112466	4	02112466	4
5	Water Tray Assy	01284620	1	01284305	1
6	Bottom Cover Plate Assy	01264100087	1	01264100089	1
7	Centrifugal fan assy	15404100078	1	15404100079	1
8	Brushless DC Motor	15704100009	1	15704100009	1
9	Motor	15705306	1	15704118	1
10	Motor	15705307	1	1570411801	1
11	Front Side Plate assy	01315374	1	01314100128	1
12	Main Board	30226000064	1	30226000064	1
13	Reactor	43130189	1	43130189	1
14	Terminal Board	4201800002601	1	4201800002601	1

No.	Name of part	For the following unit		For the following unit	
		Unit	Product Code	Unit	Product Code
		GMV-ND72PH/A-T(U)	CM810N0280	GMV-ND96PH/A-T(U)	CM810N0290
		Part code	Quantity	Part code	Quantity
15	Terminal Board	42010259	1	42010259	1
16	Main Board	30221000023	1	30221000023	1
17	Electric Box Assy	01394100584	1	01394100584	1
18	Radiator	49018000068	1	49018000068	1
19	Choke Plug of Water Pipe	76712454	2	76712454	2
20	Sensor Sub-assy	39008000103G	1	39008000103G	1
21	Filter Sub-Assy	11725211	2	11724102	2
22	Strainer	0741410000601	1	0741410000601	1
23	Electronic Expansion Valve	07331139	1	07331139	1
24	Electric Expand Valve Fitting	4304413205	1	4304413205	1

Above data is subject to change without notice, please refer the SP in global service website.

5.5 Two-way Cassette Type Indoor Unit

Exploded View of GMV-ND09TS/A-T(U) / GMV-ND12TS/A-T(U) / GMV-ND15TS/A-T(U) / GMV-ND18TS/A-T(U) / GMV-ND24TS/A-T(U):

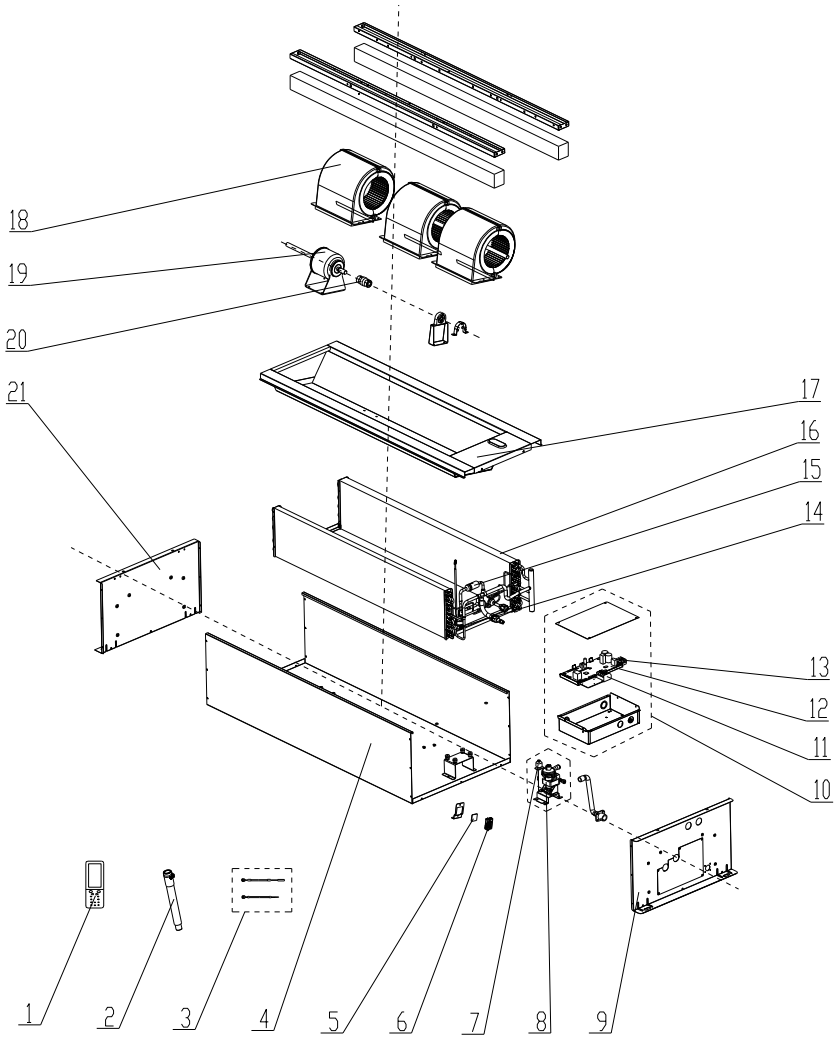

No.	Name of part	For the following unit		For the following unit	
		Unit	Product Code	Unit	Product Code
		GMV-ND09TS/A-T(U)	CM500N0890	GMV-ND24TS/A-T(U)	CM500N0930
		Part code	Quantity	Part code	Quantity
1	Remote Controller	30510589	1	30510589	1
2	Drain Hose Sub-Assy	05232050	1	05232050	1
3	Sensor Sub-assy	39008000013G	1	39008000013G	1
4	Seat Board Sub-Assy	02224100024	1	02224100024	1
5	Humidity Sensor	/	/	/	/
6	Humidity Sensor Cover	/	/	/	/
7	Water Level Switch	4501270301	1	4501270301	1
8	Water Pump	43138220	1	43138220	1
9	Right Side Plate Sub-Assy	0131410008001	1	0131410008001	1
10	Electric Box Assy	01394100582	1	01394100582	1
11	Terminal Board	4201800002601	1	4201800002601	1

No.	Name of part	For the following unit		For the following unit	
		Unit	Product Code	Unit	Product Code
		GMV-ND09TS/A-T(U)	CM500N0890	GMV-ND24TS/A-T(U)	CM500N0930
		Part code	Quantity	Part code	Quantity
12	Main Board	30226000029	1	30226000029	1
13	Terminal Board	4201115402	1	4201115402	1
14	Electronic Expansion Valve	07334494	1	07334494	1
15	Strainer	0741410000601	2	0741410000601	2
16	Evaporator Assy	0102410009401	1	01024100094	1
17	Water Tray Sub-Assy	01284100137P	1	01284100137P	1
18	Propeller Housing Sub-assy	22202030	3	22202030	3
		22202029	3	22202029	3
19	Brushless DC Motor	15704100003	1	15704100003	1
20	Joint Slack	73018731	1	73018731	1
21	Left Side Plate Sub-Assy	01314100104	1	01314100104	1

Above data is subject to change without notice, please refer the SP in global service website.

No.	Name of part	For the following unit		For the following unit	
		Unit	Product Code	Unit	Product Code
		GMV-ND18TS/A-T(U)	CM500N0920	GMV-ND24TS/A-T(U)	CM500N0930
		Part code	Quantity	Part code	Quantity
1	Remote Controller	30510589	1	30510589	1
2	Drain Hose Sub-Assy	05232050	1	05232050	1
3	Sensor Sub-assy	39008000013G	1	39008000013G	1
4	Seat Board Sub-Assy	02224100024	1	02224100024	1
5	Humidity Sensor	/	/	/	/
6	Humidity Sensor Cover	/	/	/	/
7	Water Level Switch	4501270301	1	4501270301	1
8	Water Pump	43138220	1	43138220	1
9	Right Side Plate Sub-Assy	0131410008001	1	0131410008001	1
10	Electric Box Assy	01394100582	1	01394100582	1
11	Terminal Board	4201800002601	1	4201800002601	1
12	Main Board	30226000029	1	30226000029	1
13	Terminal Board	4201115402	1	4201115402	1
14	Electronic Expansion Valve	07334494	1	07334494	1
15	Strainer	0741410000601	2	0741410000601	2
16	Evaporator Assy	0102410009402	1	01024100093	1
17	Water Tray Sub-Assy	01284100137P	1	01284100137P	1
18	Propeller Housing Sub-assy	22202030	3	22202030	3
		22202029	3	22202029	3
19	Brushless DC Motor	15704100003	1	15704100003	1
20	Joint Slack	73018731	1	73018731	1
21	Left Side Plate Sub-Assy	01314100104	1	01314100104	1

Above data is subject to change without notice, please refer the SP in global service website.

Exploded View of GMV-ND09TS/B-T(U) / GMV-ND12TS/B-T(U) / GMV-ND15TS/B-T(U) :

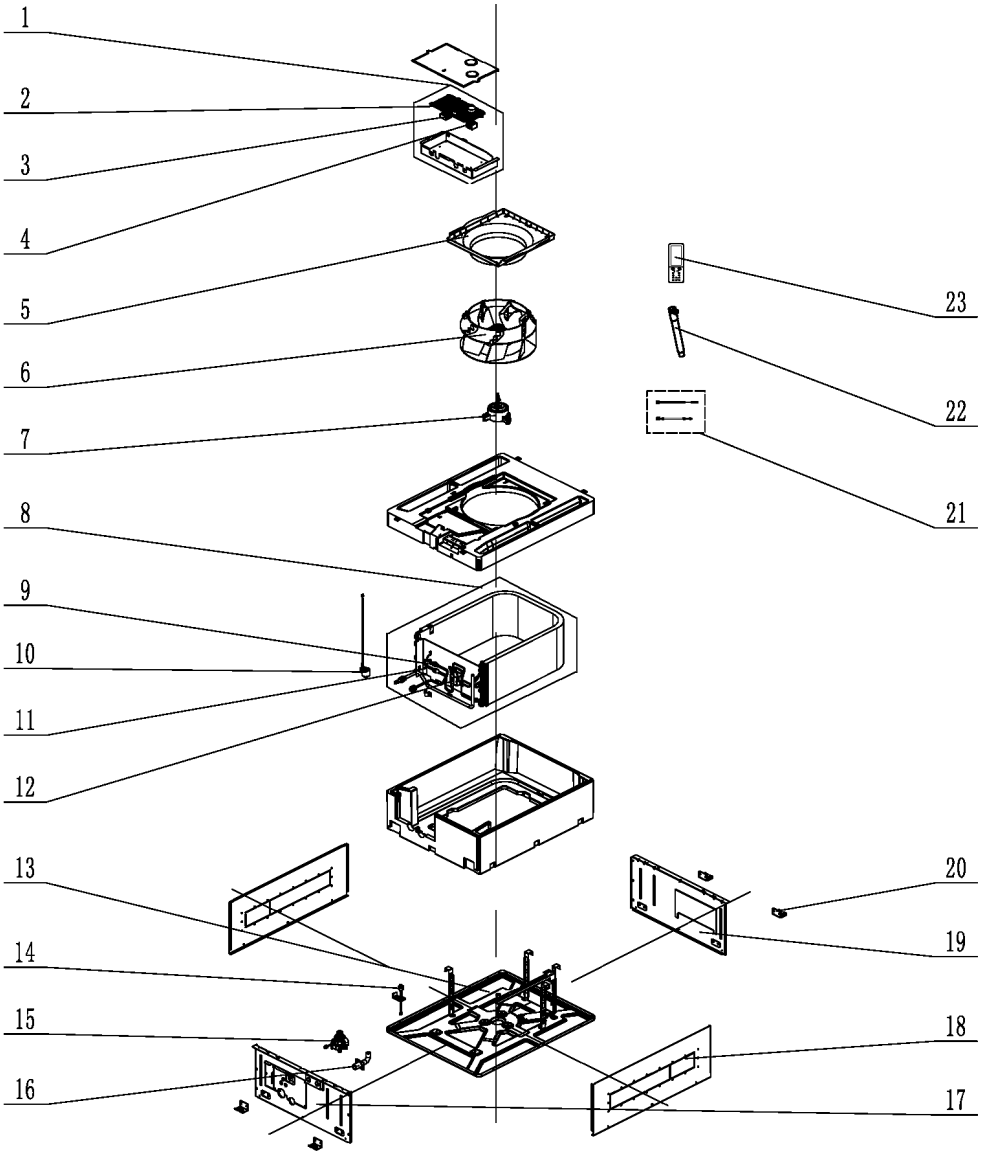

No.	Name of part	For the following unit	
		Unit	Product Code
		GMV-ND09TS/B-T(U)	CM500N1890
		GMV-ND12TS/B-T(U)	CM500N1900
		GMV-ND15TS/B-T(U)	CM500N1840
		Part code	Quantity
1	Electric Box Assy	100002074387	1
2	Main Board	300002060505	1
3	Terminal Board	42200006005404	1
4	Terminal Board	4201110602	1
5	Diversion Circle	200150060023	1
6	Centrifugal Fan	103003060022	1
7	Brushless DC Motor	15010406001201	1
8	Evaporator Assy	011001061838	1

No.	Name of part	For the following unit	
		Unit	Product Code
		GMV-ND09TS/B-T(U)	CM500N1890
		GMV-ND12TS/B-T(U)	CM500N1900
		GMV-ND15TS/B-T(U)	CM500N1840
		Part code	Quantity
9	Strainer	0721304401	2
10	Electric Expand Valve Fitting	4304413215	1
11	Electronic Expansion Valve	072009060047	1
12	Strainer	035021060019	1
13	Seat Board Sub-Assy	017080060159	1
14	Water Level Switch	45020216	1
15	Water Pump	43138000058	1
16	Drainage Pipe Assy	000406060029	1
17	Right Side Plate	012056060340	1
18	Side Plate	012010061411	2
19	Left Side Plate	012055060289	1
20	Hook	012045060010	4
21	Sensor Sub-assy	39008000012G	1
22	Drain Hose	05232046	1
23	Remote Controller	30510589	1

GMV-ND18TS/B-T(U) / GMV-ND24TS/B-T(U)

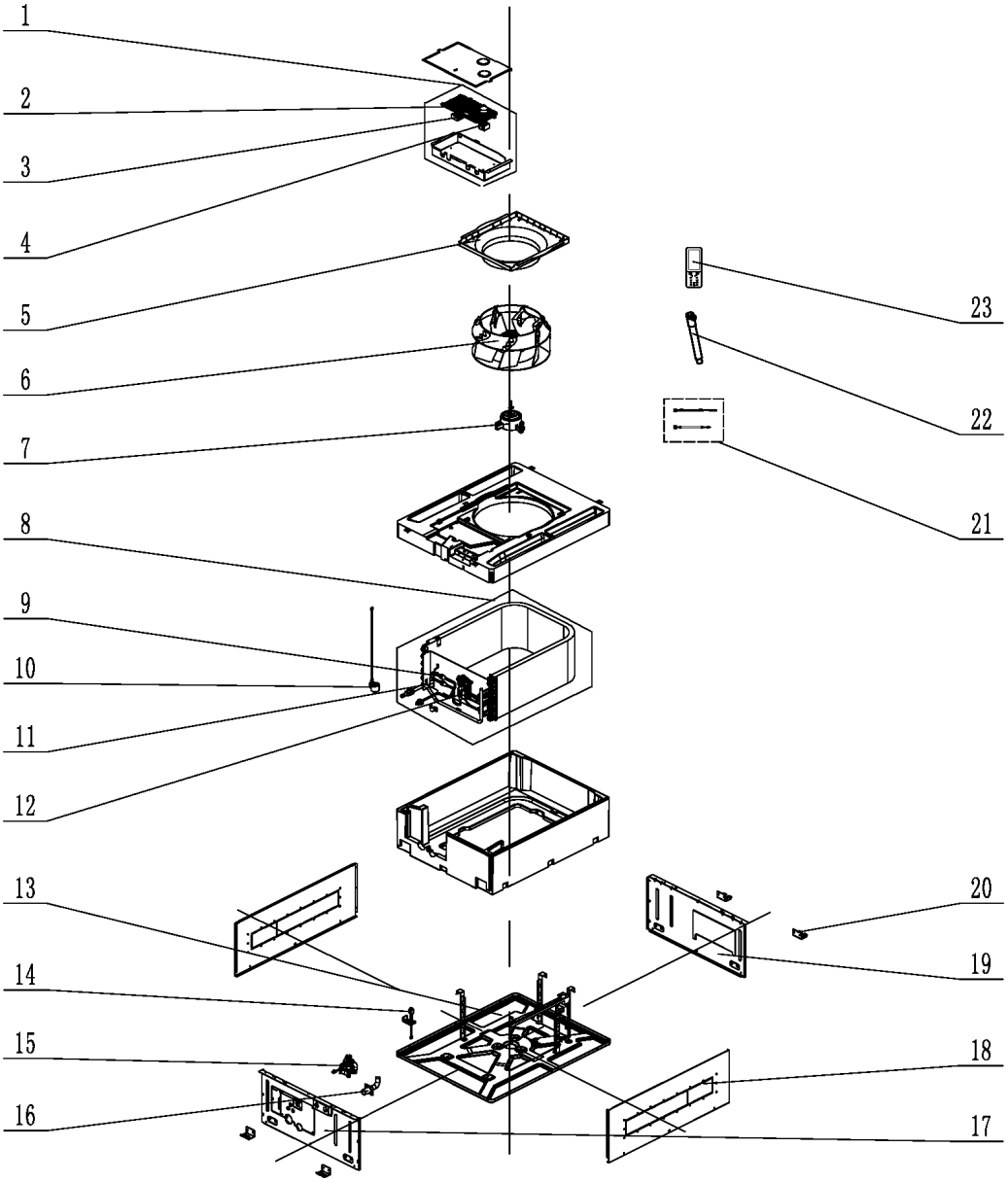

No.	Name of part	For the following unit	
		Unit	Product Code
		GMV-ND18TS/B-T(U)	CM500N1880
		GMV-ND24TS/B-T(U)	CM500N1830
		Part code	Quantity
1	Electric Box Assy	100002074387	1
2	Main Board	300002060505	1
3	Terminal Board	42200006005404	1
4	Terminal Board	4201110602	1
5	Diversion Circle	200150060023	1
6	Centrifugal Fan	103003060022	1
7	Brushless DC Motor	15010406001201	1
8	Evaporator Assy	011001061520	1

No.	Name of part	For the following unit	
		Unit	Product Code
		GMV-ND18TS/B-T(U)	CM500N1880
		GMV-ND24TS/B-T(U)	CM500N1830
		Part code	Quantity
9	Strainer	0721304401	2
10	Electric Expand Valve Fitting	4304413215	1
11	Electronic Expansion Valve	072009060046	1
12	Strainer	035021060019	1
13	Seat Board Sub-Assy	017080060159	1
14	Water Level Switch	45020216	1
15	Water Pump	43138000058	1
16	Drainage Pipe Assy	000406060029	1
17	Right Side Plate	012056060340	1
18	Side Plate	012010061411	2
19	Left Side Plate	012055060289	1
20	Hook	012045060010	4
21	Sensor Sub-assy	39008000012G	1
22	Drain Hose	05232046	1
23	Remote Controller	30510589	1

Above data is subject to change without notice, please refer the SP in global service website.

5.6 Floor Ceiling Type Indoor Unit

Exploded View of GMV-ND09ZD/A-T(U) / GMV-ND12ZD/A-T(U) / GMV-ND18ZD/A-T(U):

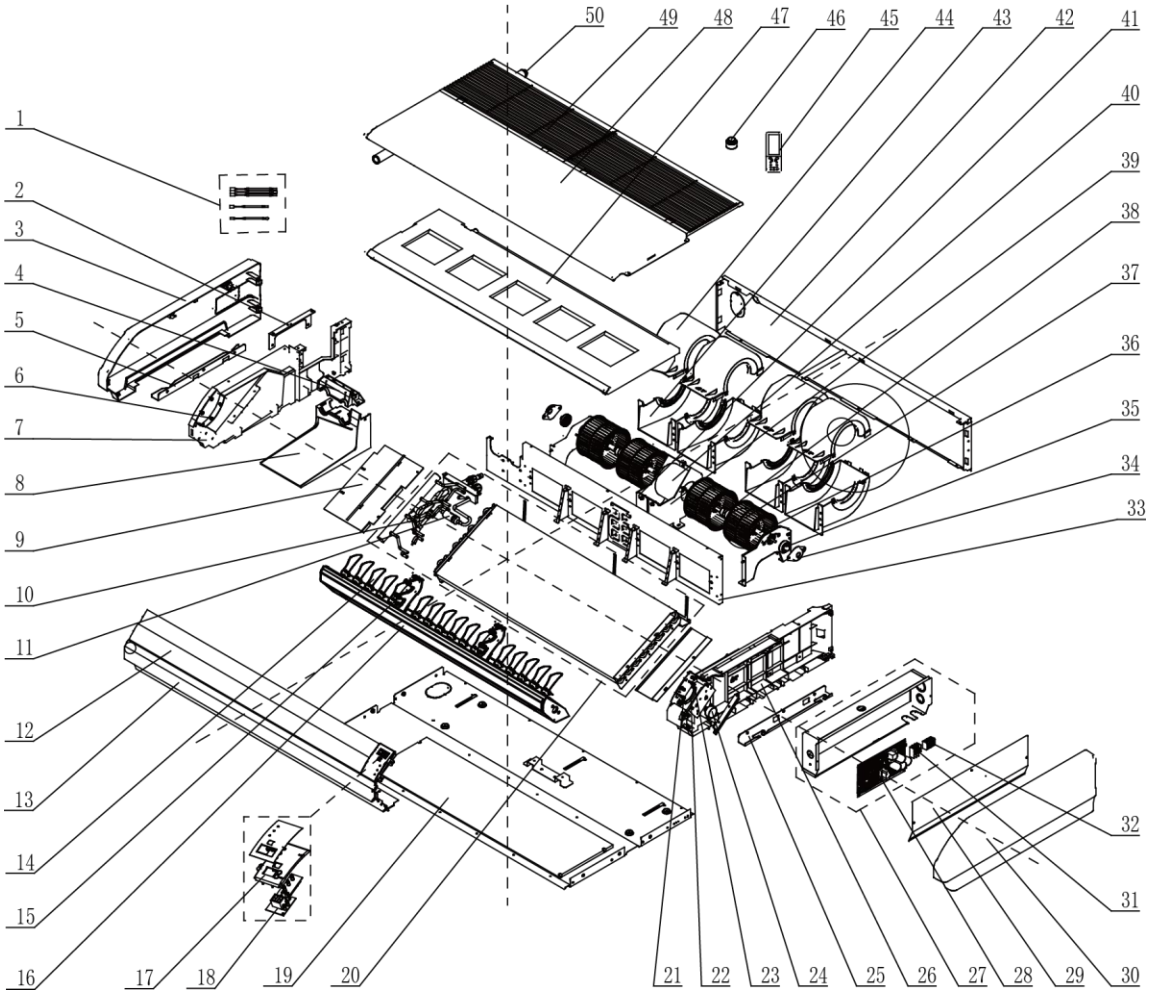

No.	Name of part	For the following unit		For the following unit	
		Unit	Product Code	Unit	Product Code
		GMV-ND09ZD/A-T(U)	CM600N0420	GMV-ND12ZD/A-T(U)	CM600N0430
		Part code	Quantity	Part code	Quantity
1	Sensor Sub-assy	39008000101G	1	39008000101G	1
2	Connection Board	02229406	1	02229406	1
3	Right Cover Plate	26909444	1	26909444	1
4	Plate Board of Water Releasing Flume	26909442	1	26909442	1
5	Installation Supporting Frame	01809402	1	01809402	1
6	Axile Bush	10542704	2	10542704	2
7	Right Side Plate Sub-Assy	01319429	1	01319429	1
8	Water Releasing Flume	02284106P	1	02284106P	1
9	Connection Board	01344115	1	01344115	1
10	Electronic Expansion Valve	07334463	1	07334463	1
11	Strainer	0741410000601	2	0741410000601	2
12	Guide Louver	10619403	2	10619403	2
13	Front Connection Board	01349414P	1	01349414P	1
14	Air Louver	10619404	16	10619404	16
15	Rotating Shaft	26909430	4	26909430	4

No.	Name of part	For the following unit		For the following unit	
		Unit	Product Code	Unit	Product Code
		GMV-ND09ZD/A-T(U)	CM600N0420	GMV-ND12ZD/A-T(U)	CM600N0430
		Part code	Quantity	Part code	Quantity
16	Guide Louver Supporter Sub-Assy	0180941601	1	0180941601	1
17	Fixed Mount	26909426R	1	26909426R	1
18	Display Board	30294000009	1	30294000009	1
19	Rear Side Plate Assy	01319400008	1	01319400008	1
20	Evaporator Assy	01024100126	1	01024100096	1
21	Rotating Shaft	26909413	1	26909413	1
22	Connecting Rod	26909411	1	26909411	1
23	Rotating Shaft	26909412	1	26909412	1
24	Stepping Motor	1521240206	1	1521240206	1
25	Installation Supporting Frame	01809401	1	01809401	1
26	Left Side Plate Sub-Assy	01319428	1	01319428	1
27	Electric Box Assy	01394100587	1	01394100587	1
28	Main Board	30226000029	1	30226000029	1
29	Electric Box Cover	01429420	1	01429420	1
30	Left Cover Plate	2690944302	1	2690944302	1
31	Terminal Board	42011106	1	42011106	1
32	Terminal Board	4201800002601	1	4201800002601	1
33	Mid-clapboard sub-assy	01249400004	1	01249400004	1
34	Support Of Motor Bearing	01792408	2	01792408	2
35	O-Gasket of Bearing	76512404	2	76512404	2
36	Rotary Axis Sub-Assy	73018000037	2	73018000037	2
37	Centrifugal Fan	10425200	4	10425200	4
38	Joint Slack	73018731	2	73018731	2
39	Supporter	01809400002	1	01809400002	1
40	Fan Motor	15704100001	1	15704100001	1
41	Supporter	01809400001	1	01809400001	1
42	Rear Connection board	01349422	1	01349422	1
43	Front Volute Casing	26905205	4	26905205	4
44	Rear Volute Casing	26905206	4	26905206	4
45	Remote Controller	30510589	1	30510589	1
46	Electric expand valve fitting	4304413203	1	4304413203	1
47	Water Tray Assy	01289404	1	01289404	1
48	Top Cover Board Sub-Assy	01269409	1	01269409	1
49	Front Grill sub-assy	01579403	2	01579403	2
50	Drainage Pipe Sub-assy	05235434	1	05235434	1

Above data is subject to change without notice, please refer the SP in global service website.

No.	Name of part	For the following unit	
		Unit	Product Code
		GMV-ND18ZD/A-T(U)	CM600N0440
		Part code	Quantity
1	Sensor Sub-assy	39008000101G	1
2	Connection Board	02229406	1
3	Right Cover Plate	26909444	1
4	Plate Board of Water Releasing Flume	26909442	1
5	Installation Supporting Frame	01809402	1
6	Axile Bush	10542704	2
7	Right Side Plate Sub-Assy	01319429	1
8	Water Releasing Flume	02284106P	1
9	Connection Board	01344115	1
10	Electronic Expansion Valve	07334463	1
11	Strainer	0741410000601	2
12	Guide Louver	10619403	2
13	Front Connection Board	01349414P	1
14	Air Louver	10619404	16
15	Rotating Shaft	26909430	4
16	Guide Louver Supporter Sub-Assy	0180941601	1
17	Fixed Mount	26909426R	1
18	Display Board	30294000009	1
19	Rear Side Plate Assy	01319400008	1
20	Evaporator Assy	01029400066	1
21	Rotating Shaft	26909413	1
22	Connecting Rod	26909411	1
23	Rotating Shaft	26909412	1
24	Stepping Motor	1521240206	1
25	Installation Supporting Frame	01809401	1
26	Left Side Plate Sub-Assy	01319428	1
27	Electric Box Assy	01394100587	1
28	Main Board	30226000029	1
29	Electric Box Cover	01429420	1
30	Left Cover Plate	2690944302	1
31	Terminal Board	42011106	1
32	Terminal Board	4201800002601	1
33	Mid-clapboard sub-assy	01249400004	1
34	Support Of Motor Bearing	01792408	2
35	O-Gasket of Bearing	76512404	2
36	Rotary Axis Sub-Assy	73018000037	2
37	Centrifugal Fan	10425200	4

No.	Name of part	For the following unit	
		Unit	Product Code
		GMV-ND18ZD/A-T(U)	CM600N0440
		Part code	Quantity
38	Joint Slack	73018731	2
39	Supporter	01809400002	1
40	Fan Motor	15704100001	1
41	Supporter	01809400001	1
42	Rear Connection board	01349422	1
43	Front Volute Casing	26905205	4
44	Rear Volute Casing	26905206	4
45	Remote Controller	30510589	1
46	Electric expand valve fitting	4304413203	1
47	Water Tray Assy	01289404	1
48	Top Cover Board Sub-Assy	01269409	1
49	Front Grill sub-assy	01579403	2
50	Drainage Pipe Sub-assy	05235434	1

Above data is subject to change without notice, please refer the SP in global service website.

Exploded View of GMV-ND24ZD/A-T(U) / GMV-ND30ZD/A-T(U):

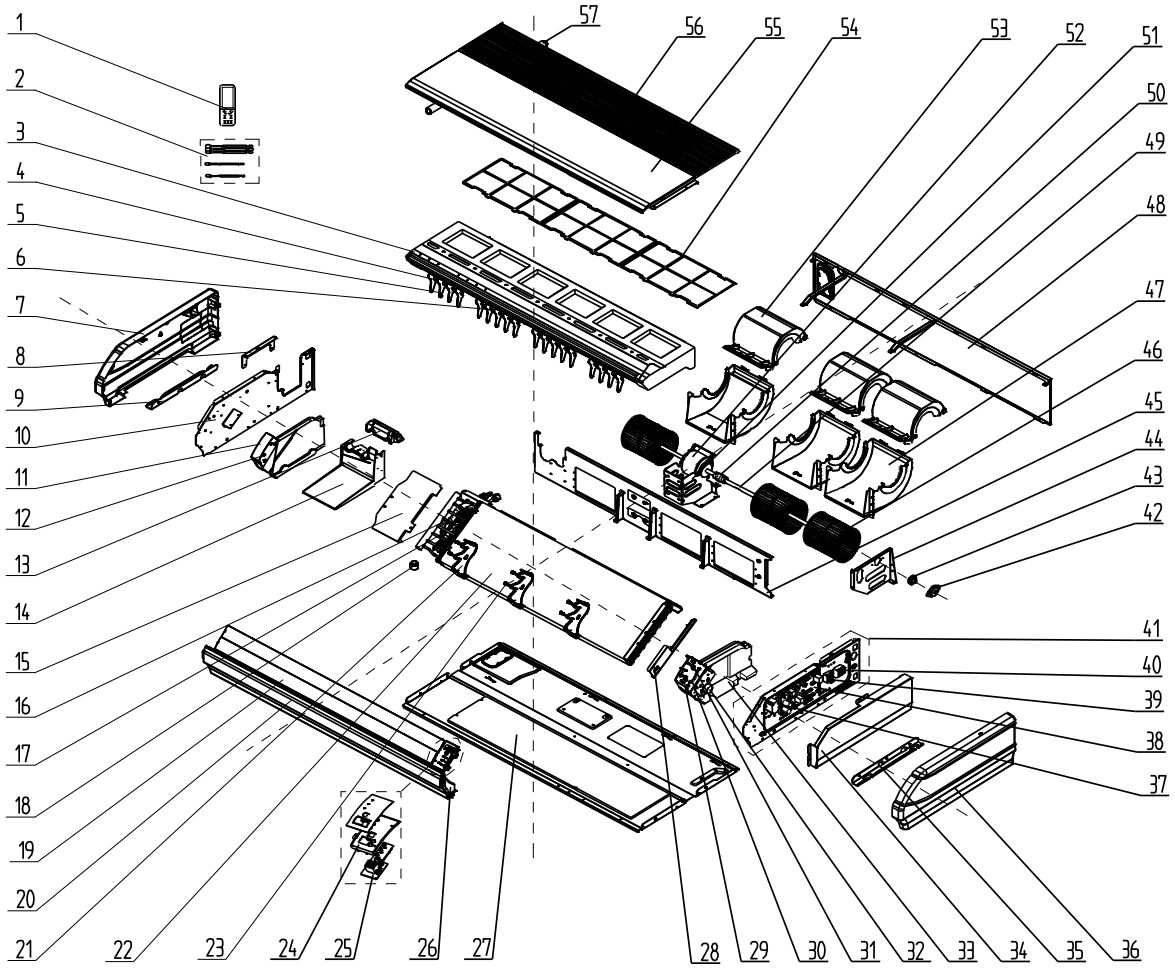

No.	Name of part	For the following unit	
		Unit	Product Code
		GMV-ND24ZD/A-T(U)	CM600N0450
		GMV-ND30ZD/A-T(U)	CM600N0460
		Part code	Quantity
1	Remote Controller	30510589	1
2	Sensor Sub-assy	39008000100G	1
3	Water Tray Assy	01289405	1
4	Swing Lever	10582008	2
5	Air Louver	26909418	18
6	Swing Lever	10582009	2
7	Right Cover Plate	2690942201	1
8	Connection Board	02229406	1
9	Installation Supporting Frame	01809402	1
10	Right Side Plate Sub-Assy	01319408	1
11	Right Foam Assy	12509425	1
12	Axile Bush	10542704	2

No.	Name of part	For the following unit	
		Unit	Product Code
		GMV-ND24ZD/A-T(U)	CM600N0450
		GMV-ND30ZD/A-T(U)	CM600N0460
		Part code	Quantity
13	Plate Board of Water Releasing Flume	26909442	1
14	Water Releasing Flume	26909441	1
15	connected board (evaporator)	01344108	1
16	Strainer	0741410000601	2
17	Electronic Expansion Valve	07334466	1
18	Electric expand valve fitting	4304413203	1
19	Guide Louver	26909432	2
20	Front Connection Board	01349408P	1
21	Supporter	26909409	3
22	Evaporator Assy	01024100104	1
23	Rotating Shaft	26909430	6
24	Fixed Mount	26909426R	1
25	Display Board	30294000009	1
26	Front Connection Board Foam Assy	12509424	1
27	Rear Side Plate Assy	01319400005	1
28	Water Releasing Flume	02289402P	1
29	Rotating Shaft	26909413	1
30	Connecting Rod	26909411	1
31	Rotating Shaft	26909412	1
32	Stepping Motor	1521240206	1
33	Left Foam Assy	12509408	1
34	Electric Box Cover	01429410P	1
35	Installation Supporting Frame	01809401	1
36	Left Cover Plate	26909416	1
37	Inductance	43128000014	1
38	Main Board	30226000027	1
39	Terminal Board	42011106	1
40	Terminal Board	4201800002601	1
41	Electric Box Assy	01394100586	1
42	Support Of Motor Bearing	01792408	1
43	O-Gasket of Bearing	76512404	1
44	Bracket 1	01809404	1
45	Clapboard Sub-Assy	01249400002	1
46	Centrifugal fan	1041410101	3

No.	Name of part	For the following unit	
		Unit	Product Code
		GMV-ND24ZD/A-T(U)	CM600N0450
		GMV-ND30ZD/A-T(U)	CM600N0460
		Part code	Quantity
47	Front volute casing	26905208	3
48	Rear Connection board	01349418	1
49	Rotary Axis Sub-Assy	73018052	1
50	Joint Slack	73018731	1
51	Motor Support Sub-Assy	01809400029	1
52	Brushless DC Motor	15705200005	1
53	Rear volute casing	26909419	3
54	Filter	11126002	1
55	Top Cover Board Sub-Assy	01269405	1
56	Front Grill sub-assy	01579402	3
57	Drainage Pipe Sub-assy	05235434	1

Above data is subject to change without notice, please refer the SP in global service website.

Exploded View of GMV-ND36ZD/A-T(U) / GMV-ND42ZD/A-T(U) / GMV-ND48ZD/A-T(U):

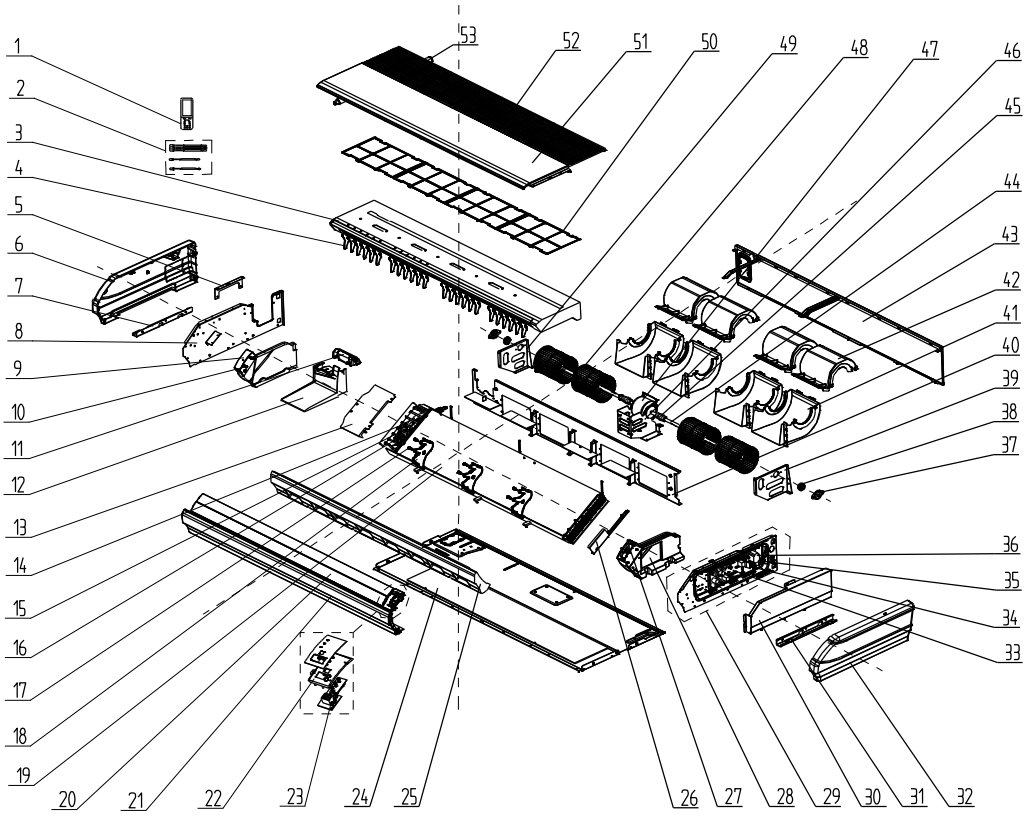

No.	Name of part	For the following unit	
		Unit	Product Code
		GMV-ND36ZD/A-T(U)	CM600N0470
		GMV-ND42ZD/A-T(U)	CM600N0480
		GMV-ND48ZD/A-T(U)	CM600N0490
		Part code	Quantity
1	Remote Controller	30510589	1
2	Sensor Sub-assy	39008000100G	1
3	Water Tray Assy	01289401	1
4	Air Louver	26909418	24
5	Connection Board	02229406	1
6	Right Cover Plate	26909422	1
7	Installation Supporting Frame	01809402	1
8	Right Side Plate Sub-Assy	01319408	1
9	Right Foam Assy	12509425	1
10	Axile Bush	10542704	2
11	Plate Board of Water Releasing Flume	26909442	1
12	Water Releasing Flume	26909441	1
13	connected board (evaporator)	01344108	1
14	Strainer	0741410000601	2
15	Electronic Expansion Valve	07334468	1

No.	Name of part	For the following unit	
		Unit	Product Code
		GMV-ND36ZD/A-T(U)	CM600N0470
		GMV-ND42ZD/A-T(U)	CM600N0480
		GMV-ND48ZD/A-T(U)	CM600N0490
		Part code	Quantity
16	Electric expand valve fitting	4304413203	1
17	Rotating Shaft	26909430	6
18	Supporter	26909409	3
19	Evaporator Assy	01024100105	1
20	Guide Louver	10619405	2
21	Front Connection Board	01349404P	1
22	Fixed Mount	26909426R	1
23	Display Board	30294000009	1
24	Rear Side Plate Sub-Assy	01319442	1
25	Front Connection Board Foam Assy	12509434	1
26	Water Releasing Flume	02289402P	1
27	Stepping Motor	1521240206	2
28	Left Foam Assy	12509437	1
29	Electric Box Assy	01394100586	1
30	Electric Box Cover	01429410P	1
31	Installation Supporting Frame	01809421	1
32	Left Cover Plate	2690941601	1
33	Main Board	30226000027	1
34	Terminal Board	42011106	1
35	Terminal Board	4201800002601	1
36	Inductance	43128000014	1
37	Support Of Motor Bearing	01792408	2
38	O-Gasket of Bearing	76512404	2
39	Bracket 1	01809404	1
40	Clapboard Sub-Assy	01249400006	1
41	Front volute casing	26905208	4
42	Rear volute casing	26909419	4
43	Rear Connection board	01349419	1
44	Rotary Axis Sub-Assy	73018052	2
45	Joint Slack	73018731	2
46	Motor Support Sub-Assy	0180940002901	1
47	Brushless DC Motor	15709400005	1
48	Centrifugal fan	1041410101	4
49	Supporter	01809403	1
50	Filter	11126002	1

No.	Name of part	For the following unit	
		Unit	Product Code
		GMV-ND36ZD/A-T(U)	CM600N0470
		GMV-ND42ZD/A-T(U)	CM600N0480
		GMV-ND48ZD/A-T(U)	CM600N0490
		Part code	Quantity
51	Top Cover Board Sub-Assy	01269400002	1
52	Front Grill sub-assy	01579401	4
53	Drainage Pipe Sub-assy	05235434	1

Above data is subject to change without notice, please refer the SP in global service website.

5.7 Fresh Air Processing Type Indoor Unit

Exploded View of GMV-NDX42P/A-T(U) / GMV-NDX48P/A-T(U)

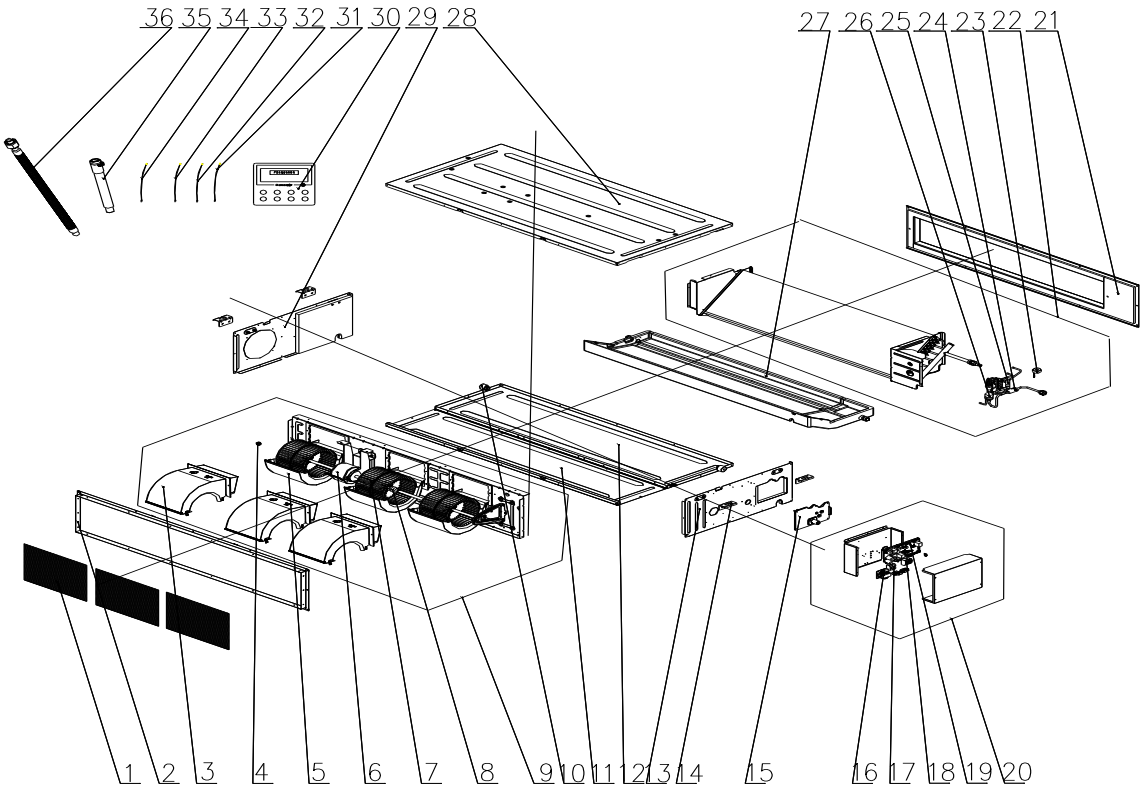

No.	Name of part	For the following unit		For the following unit	
		Unit	Product Code	Unit	Product Code
		GMV-NDX42P/A-T(U)	CM810N1250	GMV-NDX48P/A-T(U)	CM810N1030
		Part code	Quantity	Part code	Quantity
1	Filter Sub-Assy	111001000052	3	111001000052	3
2	Return Air Frame Sub-Assy	017026000003	1	017026000003	1
3	Propeller Housing(Upper)	26905200078	3	26905200078	3
4	Fan Bearing	76512210	1	76512210	1
5	Propeller Housing(Lower)	26905200079	3	26905200079	3
6	Brushless DC Motor	1570940000601	1	1570940000601	1
7	Centrifugal Fan	10455200003	3	10455200003	3
8	Joint Slack	73018731	1	73018731	1
9	Centrifugal Fan Assy	000052000028	1	000052000028	1
10	Choke plug of Drain pipe	76815214	2	76815214	2
11	Cover plate (Air Ruturn)	01265200123	1	01265200123	1
12	Bottom Cover Plate	01265200125	1	01265200125	1
13	Left Side Plate Assy	01315200147	1	01315200147	1
14	Hook	02112466	4	02112466	4
15	Seal Plate	01495200043	1	01495200043	1
16	Reactor	43138000047	1	43138000047	1
17	Terminal Board	4201115404	1	4201115404	1
18	Terminal Board	4201800002601	1	4201800002601	1
19	Main Board	300002000686	2	300002000686	2

No.	Name of part	For the following unit		For the following unit	
		Unit	Product Code	Unit	Product Code
		GMV-NDX42P/A-T(U)	CM810N1250	GMV-NDX48P/A-T(U)	CM810N1030
		Part code	Quantity	Part code	Quantity
20	Electric Box Assy	100002003006	1	100002003006	1
21	Air Outlet Frame Assy	01375200023	1	01375200023	1
22	Evaporator Assy	011001000471	1	011001000471	1
23	Electic Expand Valve Fitting	4304413215	1	4304413215	1
24	Strainer	0741410000601	1	0741410000601	1
25	Electronic Expansion Valve	07334468	1	07334468	1
26	Strainer	7415210	1	7415210	1
27	Foam Sub-Assy(Water Tray)	12505200021	1	12505200021	1
28	Top Cover Board Assy	01264100105	1	01264100105	1
29	Right Side Plate Assy	01315200148	1	01315200148	1
30	Display Board	30296000040	1	30296000040	1
31	Temperature Sensor	3900005910	1	3900005910	1
32	Temperature Sensor	390000592	1	390000592	1
33	Temperature Sensor	390000454	1	390000454	1
34	Temperature Sensor	390002072	1	390002072	1
35	Drain Hose Sub-Assy	05232050	1	05232050	1
36	Corrugated Pipe	05015408	1	05015408	1

Above data is subject to change without notice, please refer the SP in global service website.

Exploded View of GMV-NDX54P/A-T(U) / GMV-NDX72P/A-T(U) / GMV-NDX96P/A-T(U):

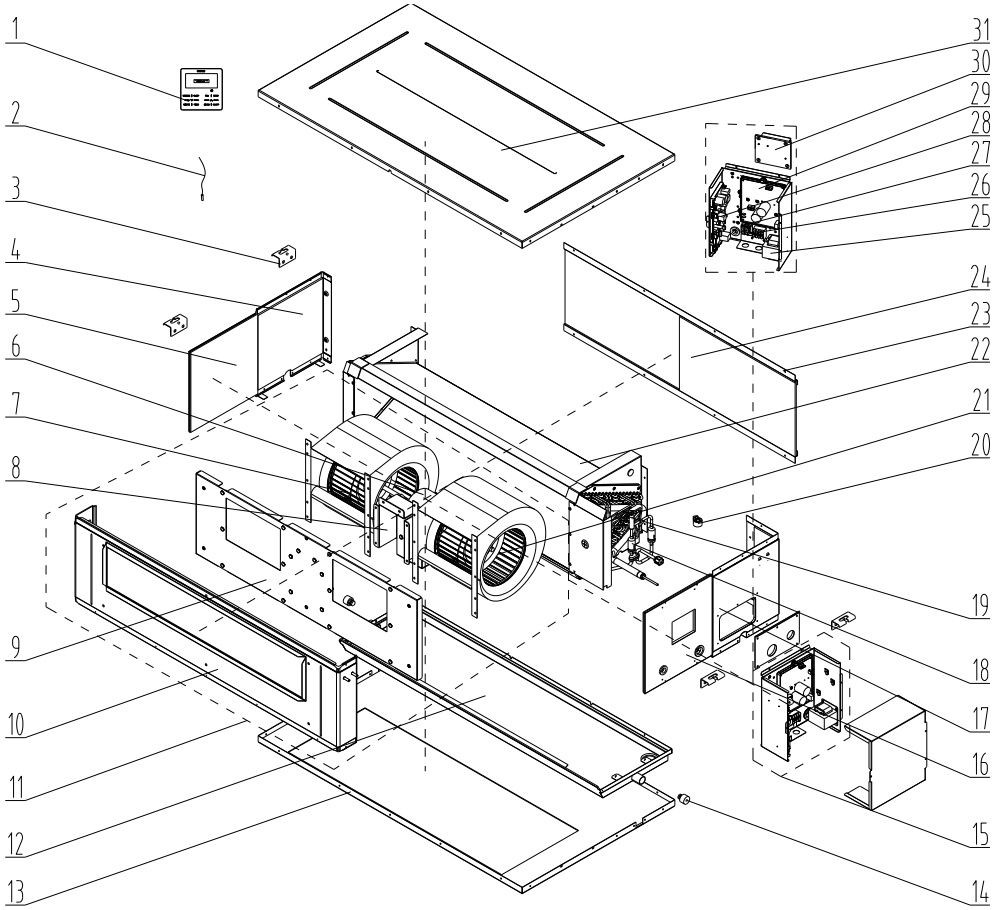

No.	Name of part	For the following unit		For the following unit		For the following unit	
		Unit	Product Code	Unit	Product Code	Unit	Product Code
		GMV-NDX 54P/A-T(U)	CM810N 1240	GMV-ND X72P/A-T(U)	CM810N 0480	GMV-ND X96P/A-T(U)	CM810N 0470
		Part Code	Quantity	Part Code	Quantity	Part Code	Quantity
1	Display Board	30296000040	1	30296000040	1	30296000040	1
2	Sensor Sub-Assy	39004165G	1	39004165G	1	39004165G	1
3	Hook	02112466	4	02112466	4	02112466	4
4	Left Side Plate Assy	01315367	1	01315367	1	01315367	1
5	Left Side Plate Sub-Assy 1	01314100127	1	01314100127	1	01314100127	1
6	Brushless DC Motor	15704100009	1	15704100009	1	15704100009	1
7	Motor for Centrifugal Fan	1570530601	1	1570530601	1	1570530601	1
8	Motor Support	01805200228	1	01805200228	1	01805200228	1
9	Blower Mounting Plate Sub-Assy	01324100064	1	01324100064	1	01324100064	1
10	Front Side Plate Sub-Assy	01315374	1	01315374	1	01315374	1
11	Centrifugal Fan Assy	15404100088	1	15404100088	1	15404100088	1
12	Water Tray Assy	01284620	1	01284620	1	01284620	1
13	Bottom Cover Plate Assy	01264100087	1	01264100087	1	01264100087	1
14	Choke Plug of Water Pipe	76712454	2	76712454	2	76712454	2
15	Electric Box Assy	01394100619	1	01394100619	1	01394100619	1
16	Right Side Plate Sub-Assy 1	01314100125	1	01314100125	1	01314100125	1
17	Right Side Plate Assy	01314100124	1	01314100124	1	01314100124	1
18	Strainer	0741410000601	2	0741410000601	2	0741410000601	2
19	Electronic Expansion Valve	07331139	1	07331139	1	07331139	1
20	Electric Expand Valve Fitting	4304413205	1	4304413205	1	4304413205	1
21	Evaporator Assy	01024100120	1	01024100120	1	01024100120	1
22	Filter Guide Groove	02284107	2	02284107	2	02284107	2
23	Filter Sub-Assy	11725211	2	11725211	2	11725211	2
24	Blower(Right)	15705307	1	15705307	1	15705307	1
25	Reactor	43130189	1	43130189	1	43130189	1
26	Terminal Board	4201800002601	1	4201800002601	1	4201800002601	1
27	Terminal Board	42010259	1	42010259	1	42010259	1
28	Main Board	30226000090	1	30226000090	1	30226000090	1
29	Main Board	30221000023	1	30221000023	1	30221000023	1
30	Radiator	49018000068	1	49018000068	1	49018000068	1
31	Top Cover Board Assy	01264100086	1	01264100086	1	01264100086	1

Above data is subject to change without notice, please refer the SP in global service website.

5.8 Console Type Indoor Unit

Exploded View of GMV-ND07C/A-T(U) / GMV-ND09C/A-T(U) / GMV-ND12C/A-T(U) / GMV-ND18C/A-T(U)

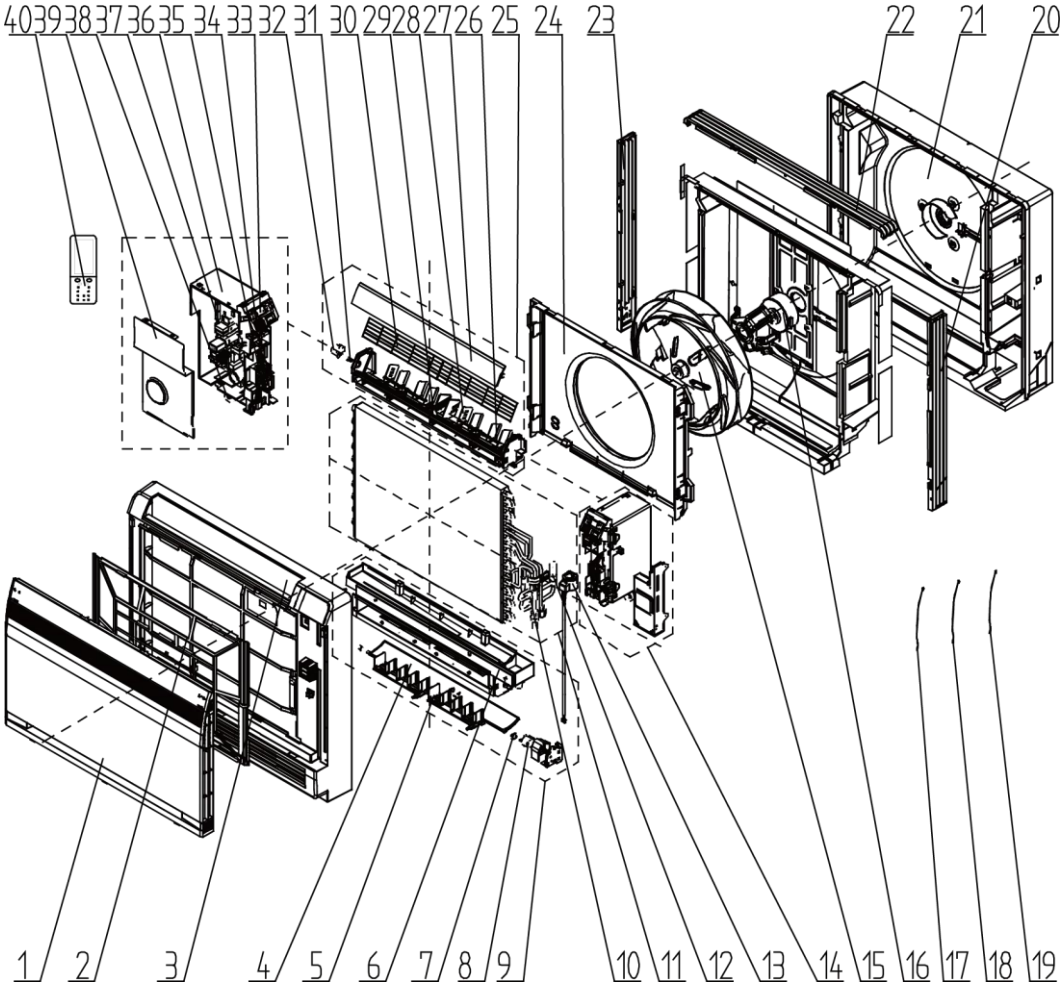

No.	Name of part	For the following unit	
		Unit	Product Code
		GMV-ND07C/A-T(U)	CM400N0110
		GMV-ND09C/A-T(U)	CM400N0120
		GMV-ND12C/A-T(U)	CM400N0100
		GMV-ND18C/A-T(U)	CM400N0130
		Part code	Quantity
1	Front Panel Assy	20012756	1
2	Filter Sub-Assy	11122139	1
3	Front Case Assy	20012601	1
4	Air Louver(lower)	10512146	1
5	Air Louver(lower)	10512144	2
6	Water Tray	20182140	1
7	Axis(lower step motor)	10542034	1
8	Stepping Motor	1521210101	1
9	Water Tray Assy	20182141	1
10	Strainer	07213029	1
11	Evaporator Assy	01024100143	1
12	Electronic Expansion Valve	07334282	1

No.	Name of part	For the following unit	
		Unit	Product Code
		GMV-ND07C/A-T(U)	CM400N0110
		GMV-ND09C/A-T(U)	CM400N0120
		GMV-ND12C/A-T(U)	CM400N0100
		GMV-ND18C/A-T(U)	CM400N0130
		Part code	Quantity
13	Electric Expand Valve Fitting	4304000102	1
14	Electric Box Assy	01394100489	1
15	Centrifugal Fan	01394100489	1
16	Brushless DC Motor	15704100012	1
17	Temperature Sensor	3900005910	1
18	Temperature Sensor	390000597	1
19	Temperature Sensor	3900019824	1
20	Let Side Plate	20052011	1
21	Rear Case	22202461	1
22	Top Side Plate	20052013	1
23	Right Side Plate	20052012	1
24	Diversion Circle	10371212	1
25	Louver Motor Sub-assy	00021100001	1
26	Swing Lever	10582096	2
27	Guide Louver (upper)	10512145	1
28	Air Louver(upper)	10512143	2
29	Shaft of Guide Louver	10542020	2
30	Rear Grill	01472024	1
31	Crank	73012005	1
32	Stepping Motor	1521210101	1
33	Display Board	30568131	1
34	Pinboard	30278000001	1
35	Terminal Board	42010268	1
36	Electric Board	20112116	1
37	Main Board	30226000080	1
38	Magnetic Ring	49010104	1
39	Shield Cover of Electric Box Sub-Assy	01592169	1
40	Remote Controller	30510589	1

Above data is subject to change without notice, please refer the SP in global service website.

5.9 Wall Mounted type Indoor Unit

Exploded View of G GMV-N07G/A3A-D(U) / GMV-N09G/A3A-D(U)

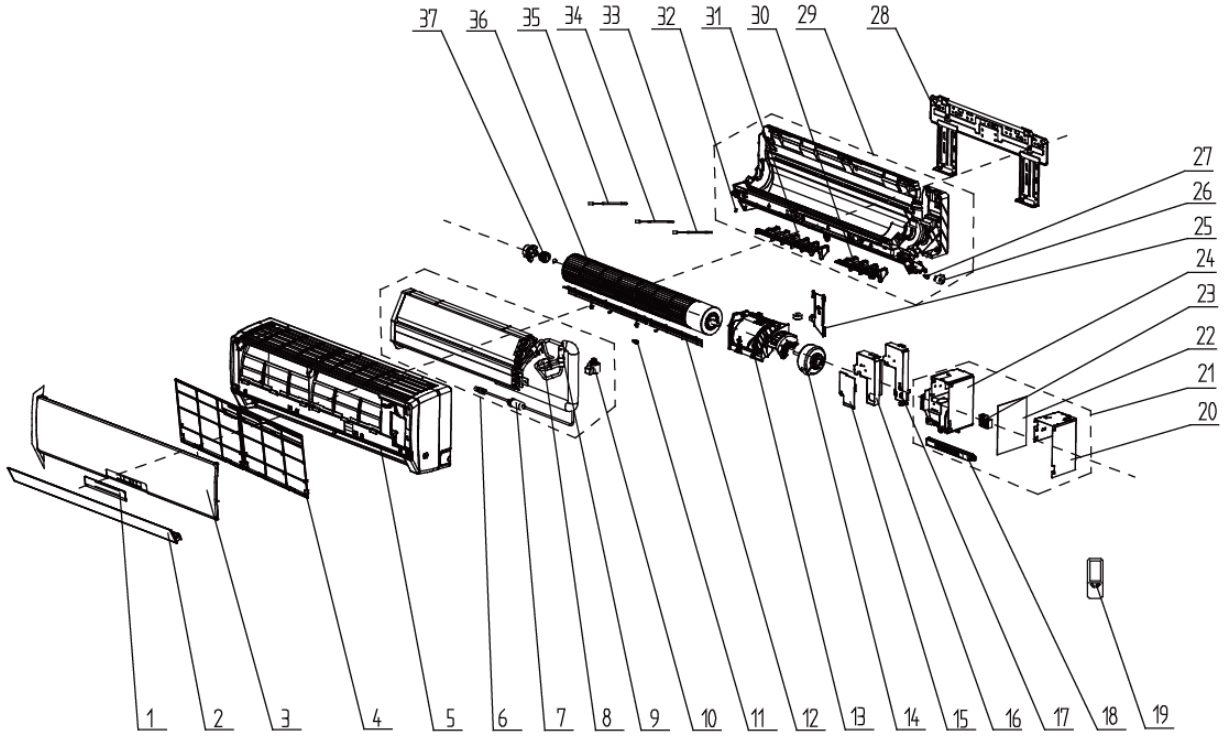

No.	Name of part	For the following unit	
		Unit	Product Code
		GMV-N07G/A3A-D(U)	CM100N1480
		GMV-N09G/A3A-D(U)	CM100N1490
		Part code	Quantity
1	Receiver Window	22432230	1
2	Guide Louver	10512157	1
3	Front Panel B1	20012122S	1
4	Filter Sub-Assy	1112220403	1
5	Front Case Sub-assy	2001213931	1
6	Evaporator Assy	01024100102	1
7	Strainer	07414100006	4
8	Strainer	07213050	4
9	Electronic Expansion Valve	07334463	4
10	Electric Expand Valve Fitting	4304413217	1
11	Axile Bush	10542036	1
12	Rear Grill	01472013	1
13	Motor Press Plate	26904100117	1
14	Fan Motor	1501208905	1
15	Electric Box Cover2	2012207504	1
16	Shield Cover of Electric Box Sub-Assy	01592073	1
17	Electric Box Cover1	2224213502	1
18	Display Board	30565007	1
19	Remote Controller	30510589	1
20	Lower Shield Sub-Assy of Electric Box	01592072	1

No.	Name of part	For the following unit	
		Unit	Product Code
		GMV-N07G/A3A-D(U)	CM100N1480
		GMV-N09G/A3A-D(U)	CM100N1490
		Part code	Quantity
21	Electric Box Assy	01394100451	1
22	Main Board	30226000061	1
23	Terminal Board	42010268	1
24	Electric Box	2011216702	1
25	Connecting pipe clamp	26112164	1
26	Stepping Motor	1521212901	1
27	Crank	10582070	1
28	Wall Mounting Frame	01252021	1
29	Rear Case Sub-Assy	2220294712	1
30	Air Louver 1	10512164	1
31	Air Louver 2	10512165	1
32	Left Axile Bush	10512037	1
33	Temperature Sensor	390000454	1
34	Temperature Sensor	39000076G	1
35	Temperature Sensor	390002072G	1
36	Cross Flow Fan	10454101	1
37	O-Gasket of Cross Fan Bearing	76512203	3

Above data is subject to change without notice, please refer the SP in global service website.

GMV-N12G/A3A-D(U) / GMV-N18G/A3A-D(U)

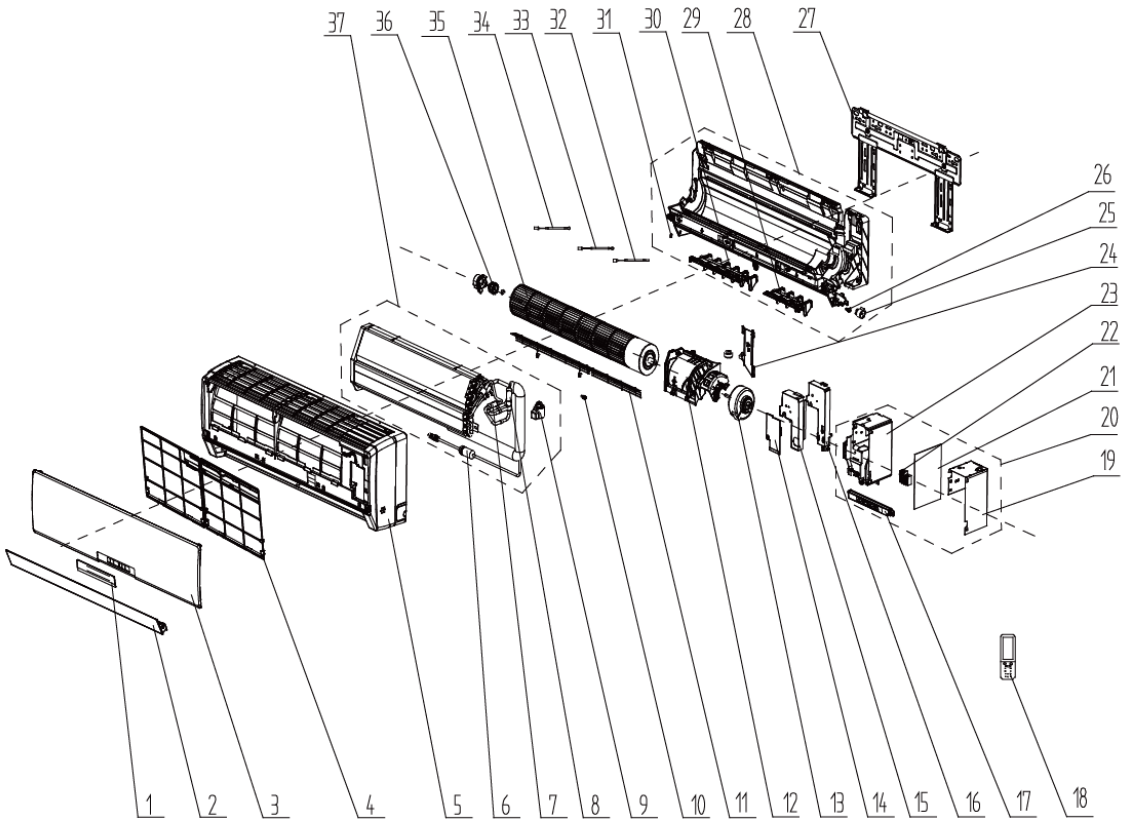

No.	Name of part	For the following unit	
		Unit	Product Code
		GMV-N12G/A3A-D(U)	CM100N1500
		GMV-N18G/A3A-D(U)	CM100N1510
		Part code	Quantity
1	Receiver Window	22432173	1
2	Guide Louver	10512115	1
3	Front Panel Assy	20012260	1
4	Filter Sub-Assy	1112208901	2
5	Front Case Sub-assy	20022172	1
6	Strainer	07414100006	1
7	Strainer	07213050	1
8	Electronic Expansion Valve	07334466	1
9	Electric Expand Valve Fitting	4304413217	1
10	Axile Bush	10542036	1
11	Mesh Enclosure(Air Outlet)	01472015	1
12	Motor Press Plate	26904264	1
13	Fan Motor	1501214601	1
14	Electric Box Cover	2011208112	1
15	Shield Cover of Electric Box	01592092	1
16	Electric Box Cover1	2012215401	1
17	Display Board	30565038	1
18	Remote Controller	30510589	1
19	Lower Shield of Electric Box	01592091	1

No.	Name of part	For the following unit	
		Unit	Product Code
		GMV-N12G/A3A-D(U)	CM100N1500
		GMV-N18G/A3A-D(U)	CM100N1510
		Part code	Quantity
20	Electric Box Assy	01394100453	1
21	Main Board	30226000062	1
22	Terminal Board	42010268	1
23	Electric Box	2011210802	1
24	Connecting pipe clamp	26112164	1
25	SteppingMotor	15012086	1
26	Crank	10582070	1
27	Wall Mounting Frame	01252218	1
28	Rear Case Sub-Assy	2220294108	1
29	Air Louver 1	10512708	1
30	Air Louver 2	10512709	1
31	Left Axile Bush	10512037	1
32	Temperature Sensor	39000076G	1
33	Temperature Sensor	390000456	1
34	Temperature Sensor	390002072G	1
35	Cross Flow Fan	10454102	1
36	O-Gasket of Cross Fan Bearing	76512203	1
37	Evaporator Assy	01024100101	1

Above data is subject to change without notice, please refer the SP in global service website.

GMV-N24G/A3A-D(U)

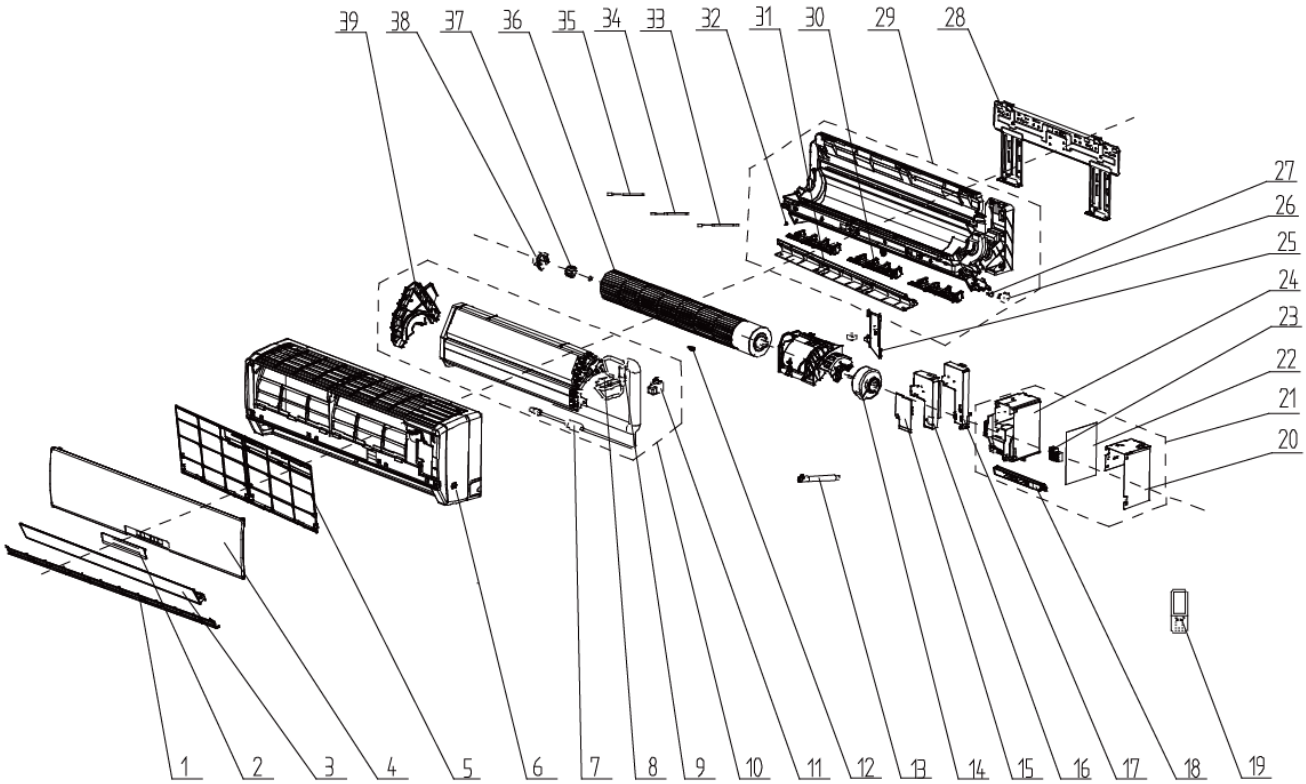

No.	Name of part	For the following unit	
		Unit	Product Code
		GMV-N24G/A3A-D(U)	CM100N1520
		Part code	Quantity
1	Receiver Window	22432230	1
2	Guide Louver	10512157	1
3	Front Panel B1	20012122S	1
4	Filter Sub-Assy	1112220403	1
5	Front Case Sub-assy	2001213931	1
6	Evaporator Assy	01024100097	2
7	Strainer	07414100006	4
8	Strainer	07213050	4
9	Electronic Expansion Valve	07334463	4
10	Electric Expand Valve Fitting	4304413217	2
11	Axile Bush	10542036	1
12	Rear Grill	01472013	1
13	Motor Press Plate	26904100117	1
14	Fan Motor	1501208905	1
15	Electric Box Cover2	2012207504	1
16	Shield Cover of Electric Box Sub-Assy	01592073	1
17	Electric Box Cover1	2224213502	1
18	Display Board	30565007	2

No.	Name of part	For the following unit	
		Unit	Product Code
		GMV-N24G/A3A-D(U)	CM100N1520
		Part code	Quantity
19	Remote Controller	30510589	1
20	Lower Shield Sub-Assy of Electric Box	01592072	2
21	Electric Box Assy	01394100451	1
22	Main Board	30226000061	2
23	Terminal Board	42010268	2
24	Electric Box	2011216702	2
25	Connecting pipe clamp	26112164	1
26	Stepping Motor	1521212901	2
27	Crank	10582070	2
28	Wall Mounting Frame	01252021	1
29	Rear Case Sub-Assy	2220294712	2
30	Air Louver 1	10512164	2
31	Air Louver 2	10512165	2
32	Left Axile Bush	10512037	2
33	Temperature Sensor	390000454	1
34	Temperature Sensor	39000076G	1
35	Temperature Sensor	390002072G	1
36	Cross Flow Fan	10454101	1
37	O-Gasket of Cross Fan Bearing	76512203	3
38	Ring of Bearing	26152025	1
39	Evaporator Support	24212103	1

Above data is subject to change without notice, please refer the SP in global service website.

GMV-ND06G/B4B-T(U), GMV-ND07G/B4B-T(U), GMV-ND09G/B4B-T(U), GMV-ND12G/B4B-T(U), GMV-ND14G/B4B-T(U), GMV-ND18G/B4B-T(U), GMV-ND24G/B4B-T

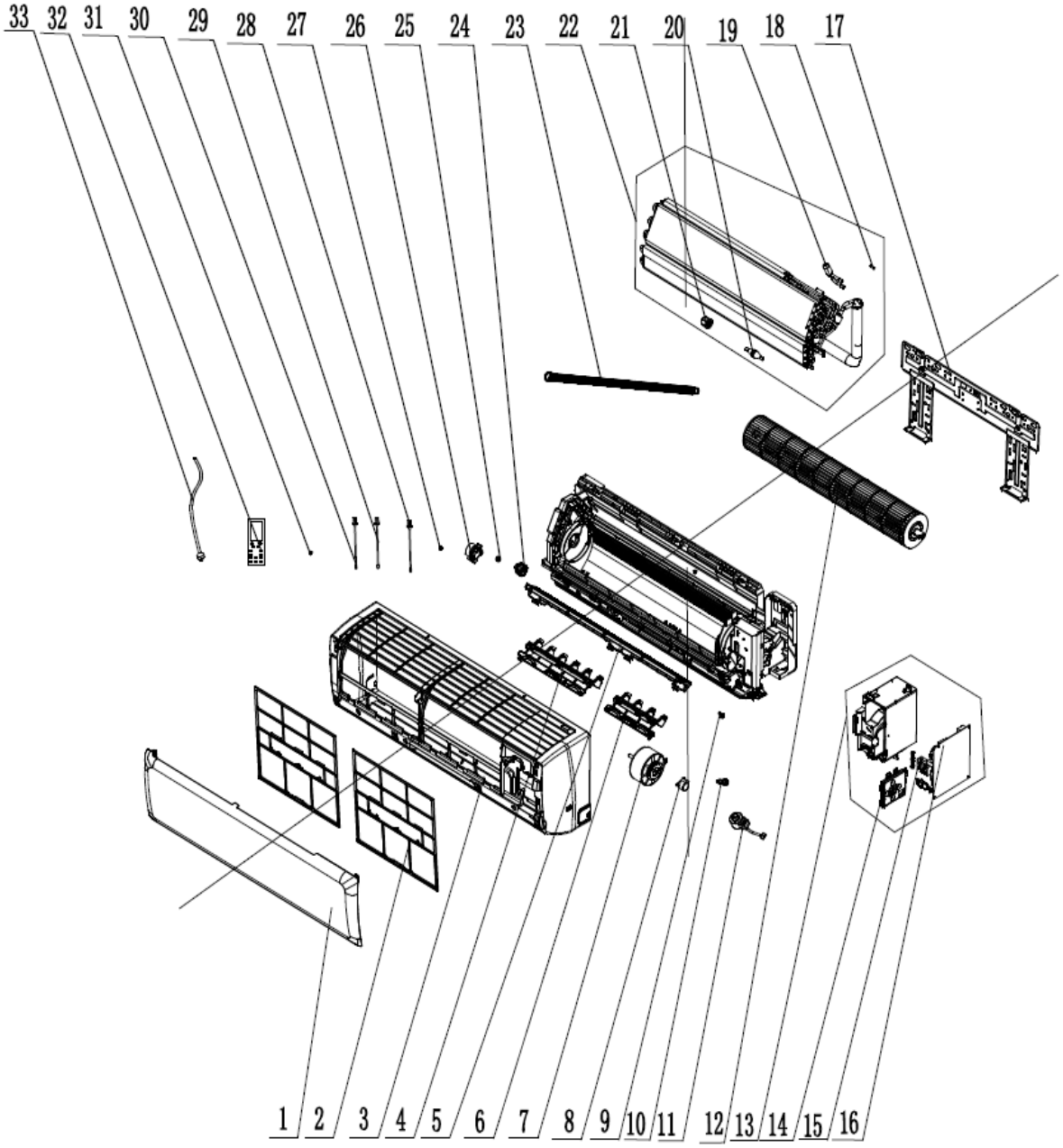

No.	Name of part	For the following unit	
		Unit	Product Code
		GMV-ND06G/B4B-T(U)	CM100N2950
		GMV-ND07G/B4B-T(U)	CM100N2960
		GMV-ND09G/B4B-T(U)	CM100N2970
		GMV-ND12G/B4B-T(U)	CM100N2980
		Part code	Quantity
1	Front Panel	20000300027T	1
2	Filter Sub-Assy	11122468	2
3	Front CaseAssy	00000200045	1
4	Air Louver1	10512723	1
5	Helicoid Tongue	26112436	1
6	Air Louver2	10512724	1
7	Fan Motor	1501246601	1

No.	Name of part	For the following unit	
		Unit	Product Code
		GMV-ND06G/B4B-T(U)	CM100N2950
		GMV-ND07G/B4B-T(U)	CM100N2960
		GMV-ND09G/B4B-T(U)	CM100N2970
		GMV-ND12G/B4B-T(U)	CM100N2980
		Part code	Quantity
8	Stepping Motor	1521210710	1
9	Crank	73012005	1
10	Rubber Plug(WaterTray)	76712012	1
11	Electric Expand Valve Fitting	4304413216	1
12	Cross Flow Fan	10352056	1
13	Electric Box Assy	100002063998	1
14	Display Board	30565260	1
15	Termina lBoard	4201026805	1
16	Main Board	300002060244	1
17	Wall Mounting Frame	01252484	1
18	Filter Sub-Assy	11120011	1
19	Electronic Expansion Valve	07334463	1
20	Strainer A	0721002201	1
21	Sealing Cap(PressureWarning)	2611219201	1
22	Evaporator Assy	011001060163	1
23	Drainage Hose	05230014	1
24	O-Gasket of Cross Fan Bearing	76512203	1
25	Fan Bearing	7651221001	1
26	Ring of Bearing	26152022	1
27	Left Axile Bush	10512037	1
28	Temperature Sensor	390000454	1
29	Temperature Sensor	39000076G	1
30	Temperature Sensor	390002072	1
31	Axile Bush	10542036	1
32	Remote Controller	30510589	1
33	Power Cord	4002046417	1

Above data is subject to change without notice, please reference the SP in global service website.

No.	Name of part	For the following unit	
		Unit	Product Code
		GMV-ND14G/B4B-T(U)	CM100N2990
		Part code	Quantity
1	Front Panel	20000300028T	1
2	Filter Sub-Assy	1112208906	2
3	Front CaseAssy	200042	1
4	Air Louver1	10512732	1
5	Helicoid Tongue	26112512	1
6	Air Louver2	10512724	0
7	Fan Motor	15012136	1
8	Stepping Motor	1521240212	1
9	Crank	73012005	1
10	Rubber Plug(WaterTray)	76712012	1
11	Electric Expand ValveFitting	4304413216	1
12	Cross Flow Fan	10352060	1
13	Electric Box Assy	100002061356	1
14	Display Board	30565260	1
15	Termina lBoard	4201026805	1
16	Main Board	300002060244	1
17	Wall Mounting Frame	1362026	1
18	Filter Sub-Assy	30209060001	1
19	Electronic Expansion Valve	7334466	1
20	Strainer A	721002201	1
21	Sealing Cap(PressureWarning)	2611219202	1
22	Evaporator Assy	11001060216	1
23	Drainage Hose	05230014	1
24	O-Gasket of Cross Fan Bearing	76512203	1
25	Fan Bearing	7651221001	1
26	Ring of Bearing	26152025	1
27	Left Axile Bush	10512037	1
28	Temperature Sensor	390000454	1
29	Temperature Sensor	39000076G	1
30	Temperature Sensor	390002072	1
31	Axile Bush	10542036	1
32	Remote Controller	30510589	1
33	Power Cord	4002046417	1

Above data is subject to change without notice, please reference the SP in global service website.

No.	Name of part	For the following unit	
		Unit	Product Code
		GMV-ND18G/B4B-T(U)	CM100N3000
		GMV-ND24G/B4B-T(U)	CM100N3010
		Part code	Quantity
1	Front Panel	20000300029T	1
2	Filter Sub-Assy	1101200703	2
3	Front CaseAssy	200043	1
4	Air Louver 1	10512737	3
5	Helicoid Tongue	26112513	1
6	Air Louver 2	10512724	0
7	Fan Motor	15012136	1
8	Stepping Motor	1521240212	1
9	Crank	73012005	1
10	Rubber Plug(WaterTray)	76712012	1
11	Electric Expand ValveFitting	4304413216	1
12	Cross Flow Fan	10352057	1
13	Electric Box Assy	100002061356	1
14	Display Board	30565260	1
15	Termina lBoard	4201026805	1
16	Main Board	300002060244	1
17	Wall Mounting Frame	1252229	1
18	Filter Sub-Assy	30209060001	1
19	Electronic Expansion Valve	7334466	1
20	Strainer A	721002201	1
21	Sealing Cap(PressureWarning)	2611219202	1
22	Evaporator Assy	11001060225	1
23	Drainage Hose	05230014	1
24	O-Gasket of Cross Fan Bearing	76512203	1
25	Fan Bearing	7651221001	1
26	Ring of Bearing	26152025	1
27	Left Axile Bush	10512037	1
28	Temperature Sensor	390000454	1
29	Temperature Sensor	39000076G	1
30	Temperature Sensor	390002072	1
31	Axile Bush	10542036	1
32	Remote Controller	30510589	1
33	Power Cord	4002046417	1

Above data is subject to change without notice, please reference the SP in global service website.

GMV-ND30G/B4B-T(U)、GMV-ND36G/B4B-T(U)

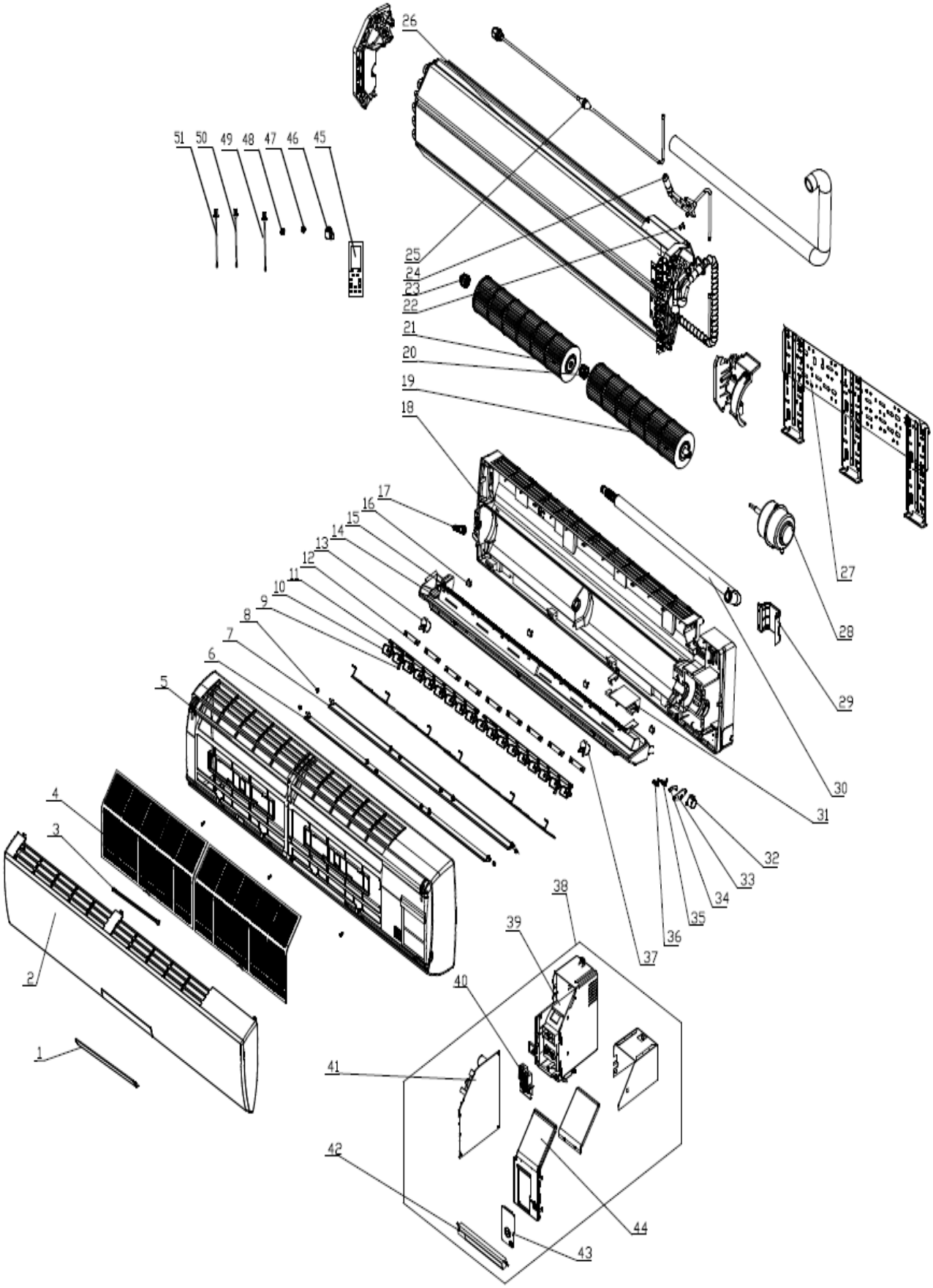

No.	Name of part	For the following unit	
		Unit	Product Code
		GMV-ND30G/B4B-T(U)	CM100N3020
		GMV-ND36G/B4B-T(U)	CM100N3030
		Part code	Quantity
1	Receiver Window	22432164	0
2	Front Panel	209007060019	1
3	Stand Bar	2421212001	1
4	Filter Sub-Assy	1112210601	2
5	Front Case Sub-assy	209007060019	1
6	Upper Guide Louver	10512166	1
7	Lower Guide Louver	10512167	1
8	Axile Bush	10542704	6
9	Air Louver 2	10512169	2
10	Air Louver 1	10512168	16
11	Connecting Rod	10582086	2
12	Louver Clamp	26112127	9
13	SteppingMotor	1521210701	1
14	Water Tray	20182138	1
15	Air Guider System in Water Tray Assy	10102040	1
16	Screw Cover	242520053	4
17	Rubber Plug (Water Tray)	76712012	1
18	Rear Case Sub-Assy	22202703	1
19	Cross Flow Fan 1	10352039	1
20	Bearing Holder Sub-assy	26152028	1
21	Cross Flow Fan 2	10352040	1
22	Filter Sub-Assy	11120012	1
23	O-Gasket sub-Assy of Bearing	76512051	1
24	Strainer A	0721002201	1
25	Electronic Expansion Valve	07334468	1
26	Evaporator Assy	011001000608	1
27	Wall Mounting Frame	01252398	1
28	Fan Motor	1501213401	1
29	Pipe Clamp	26112071	1
30	Drainage Hose	0523001404	1
31	Cover Plate	2012212402	1
32	SteppingMotor	1501207902	1
33	Press Plate(Crank)	26112070	1
34	Crank-guide	10582041	1
35	Upper Crank	10562004	1
36	Lower crank	10562005	1
37	SteppingMotor	15012122	1
38	Electric Box Assy	100002063782	1
39	Electric Box	201022502	1
40	Terminal Board	42010268	1
41	Main Board	300002000701	1
42	Display Board	30565260	1
43	Electric Box Cover	201022523	1
44	Electric Box Cover	2011204404S	1

No.	Name of part	For the following unit	
		Unit	Product Code
		GMV-ND30G/B4B-T(U)	CM100N3020
		GMV-ND36G/B4B-T(U)	CM100N3030
		Part code	Quantity
45	Remote Controller	30510589	1
46	Electric Expand Valve Fitting	4304413217	1
47	Fan Bearing	7651221001	1
48	Fan Bearing	76512210	1
49	Temperature Sensor	390002072	1
50	Temperature Sensor	39000076G	1
51	Temperature Sensor	390000454	1

Above data is subject to change without notice, please reference the SP in global service website.

5.10 Compact Four-way Cassette Type Indoor Unit

Exploded View of GMV-ND07T/B-T(U) / GMV-ND09T/B-T(U) / GMV-ND12T/B-T(U) / GMV-ND15T/B-T(U) / GMV-ND18T/B-T(U)

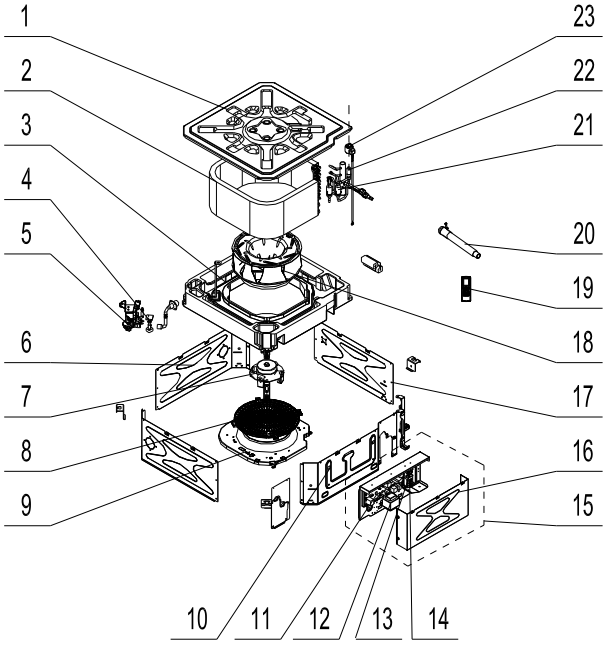

No.	Name of part	For the following unit		For the following unit	
		Unit	Product Code	Unit	Product Code
		GMV-ND07T/B-T(U)	CM500N0940	GMV-ND12T/B-T(U)	CM500N0960
		GMV-ND09T/B-T(U)	CM500N0950	GMV-ND15T/B-T(U)	CM500N0970
		Part code	Quantity	Part code	Quantity
1	Base Plate Assy	02229400007	1	02229400007	1
2	Evaporator Assy	01024100149	1	01024100137	1
3	Water Tray Assy	01289400004	1	01289400004	1
4	Liquid Level Switch	450102013	1	450102013	1
5	Water Pump	43138000024	1	43138000024	1
6	Right Side Plate Sub-Assy	01319400013	2	01319400013	2

No.	Name of part	For the following unit		For the following unit	
		Unit	Product Code	Unit	Product Code
		GMV-ND07T/B-T(U)	CM500N0940	GMV-ND12T/B-T(U)	CM500N0960
		GMV-ND09T/B-T(U)	CM500N0950	GMV-ND15T/B-T(U)	CM500N0970
		Part code	Quantity	Part code	Quantity
7	Brushless DC Motor	15709400004	1	15709400004	1
8	Rear Grill	26909400007	1	26909400007	1
9	Diversion Circle	10479400001	1	10479400001	1
10	Front Side Plate Sub-Assy	01319400014	1	01319400014	1
11	Main Board	30226000029	1	30226000029	1
12	Transformer	43118000015	1	43118000015	1
13	Terminal Board	42011106	1	42011106	1
14	Terminal Board	4201800002601	1	4201800002601	1
15	Electric Box Assy	100002001831	1	100002001831	1
16	Electric Box Cover	01429400002	1	01429400002	1
17	Left Side Plate Sub-Assy	01319400012	1	01319400012	1
18	Centrifugal Fan	10429400001	1	10429400001	1
19	Remote Controller	30510589	1	30510589	1
20	Drain Hose Sub-Assy	05232050	1	05232050	1
21	Strainer	0741410000601	2	0741410000601	2
22	Electronic Expansion Valve	07334463	1	07334463	1
23	Electric Expand Valve Fitting	4304413215	1	4304413215	1

Above data is subject to change without notice, please refer the SP in global service website.

No.	Name of part	For the following unit	
		Unit	Product Code
		GMV-ND18T/B-T(U)	CM500N0980
		Part code	Quantity
1	Base Plate Assy	02229400007	1
2	Evaporator Assy	01024100152	1
3	Water Tray Assy	01289400004	1
4	Liquid Level Switch	450102013	1
5	Water Pump	43138000024	1
6	Right Side Plate Sub-Assy	01319400013	2
7	Brushless DC Motor	15709400004	1
8	Rear Grill	26909400007	1
9	Diversion Circle	10479400001	1
10	Front Side Plate Sub-Assy	01319400014	1
11	Main Board	30226000029	1
12	Transformer	43118000015	1
13	Terminal Board	42011106	1
14	Terminal Board	4201800002601	1

No.	Name of part	For the following unit	
		Unit	Product Code
		GMV-ND18T/B-T(U)	CM500N0980
		Part code	Quantity
15	Electric Box Assy	100002001831	1
16	Electric Box Cover	01429400002	1
17	Left Side Plate Sub-Assy	01319400012	1
18	Centrifugal Fan	10429400001	1
19	Remote Controller	30510589	1
20	Drain Hose Sub-Assy	05232050	1
21	Strainer	0741410000601	2
22	Electronic Expansion Valve	07334463	1
23	Electric Expand Valve Fitting	4304413215	1

Above data is subject to change without notice, please refer the SP in global service website.

5.11 Super High Static Pressure Duct Type Indoor Unit

Exploded View of GMV-ND07PHS/B-T(U) / GMV-ND09PHS/B-T(U):

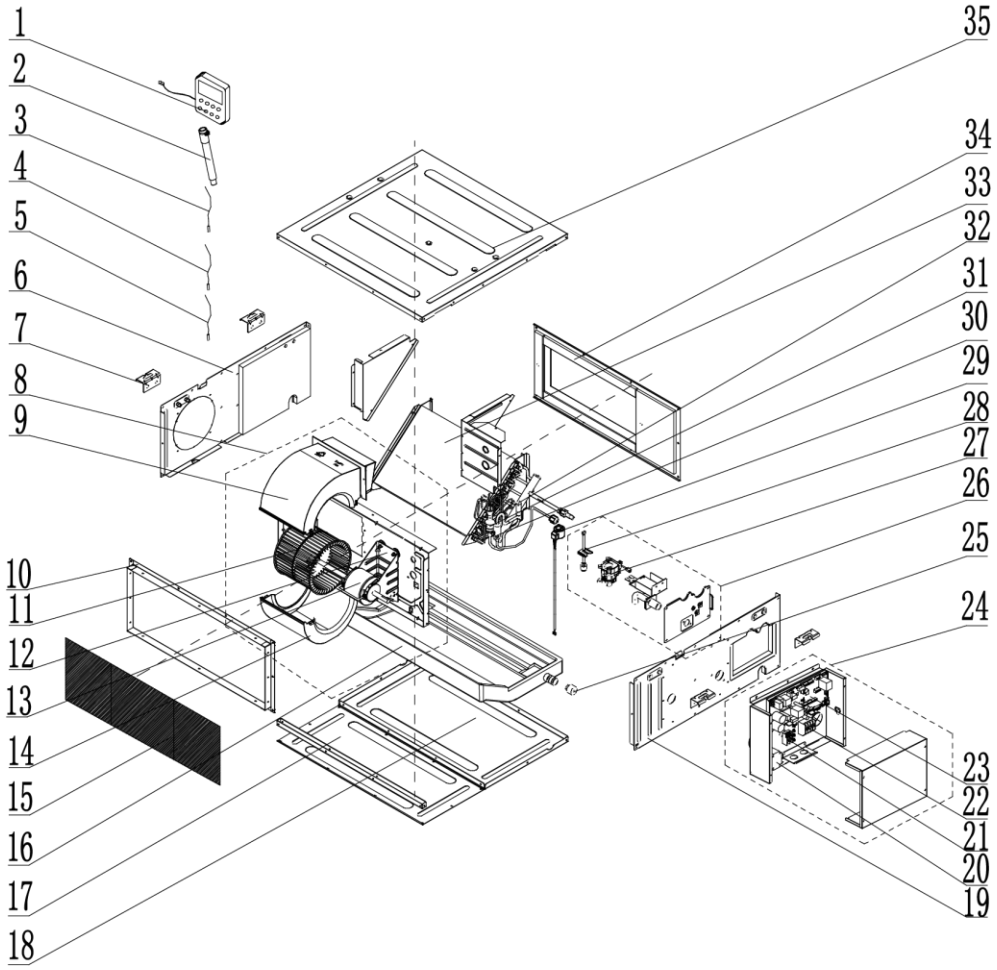

No.	Name of part	For the following unit		For the following unit	
		Unit	Product Code	Unit	Product Code
		GMV-ND07PHS/B-T(U)	CM810N0830	GMV-ND09PHS/B-T(U)	CM810N0790
		Part code	Quantity	Part code	Quantity
1	Display Board	30296000040	1	30296000040	1
2	Drain Hose Sub-Assy	05232050	1	05232050	1
3	Temperature Sensor	390000454	1	390000454	1
4	Temperature Sensor	390000592	1	390000592	1
5	Temperature Sensor	3900005910	1	3900005910	1
6	Right Side Plate Assy	01315200148	1	01315200148	1
7	Hook	02112466	4	02112466	4
8	Centrifugal Fan Assy	15404100074	1	15404100074	1
9	Propeller Housing(Upper)	26905200078	1	26905200078	1
10	Return Air Frame Sub-Assy	017026000004	1	017026000004	1
11	Centrifugal Fan	10455200003	1	10455200003	1
12	Supporter(Fan motor)	0180520027201	1	0180520027201	1
13	Brushless DC Motor	1570520000501	1	1570520000501	1
14	Propeller Housing(Lower)	26905200079	1	26905200079	1
15	Filter Sub-Assy	111001000055	1	111001000055	1
16	Foam Sub-assy	12505200038	1	12505200038	1
17	Cover Of Air-In	01265200182	1	01265200182	1
18	Bottom Cover Plate	01265200181	1	01265200181	1
19	Left Side Plate Assy	01315200147	1	01315200147	1
20	Inductance	43128000014	1	43128000014	1
21	Terminal Board	4201115402	1	4201115402	1
22	Terminal Board	4201800002601	1	4201800002601	1
23	Main Board	30226000089	1	30226000089	1
24	Electric Box Assy	100002000985	1	100002000985	1
25	Choke Plug Of Drain Pipe	76815214	2	76815214	2
26	Seal Plate Assy	01495200079	1	01495200079	1
27	Water Pump	43138000058	1	43138000058	1
28	Water Level Switch	45020216	1	45020216	1
29	Electric Expand Valve Fitting	4304413215	1	4304413215	1
30	Strainer	07415210	1	07415210	1
31	Strainer	0741410000601	1	0741410000601	1
32	Electronic Expansion Valve	07334466	1	07334466	1
33	Evaporator Assy	011001000293	1	011001000293	1
34	Air Outlet Frame Assy	01374100070	1	01374100070	1
35	Top Cover Board Assy	01264100081	1	01264100081	1

Above data is subject to change without notice, please refer the SP in global service website.

Exploded View of GMV-ND12PHS/B-T(U) / GMV-ND15PHS/B-T(U) / GMV-ND18PHS/B-T(U) / GMV-ND22PHS/B-T(U) / GMV-ND24PHS/B-T(U):

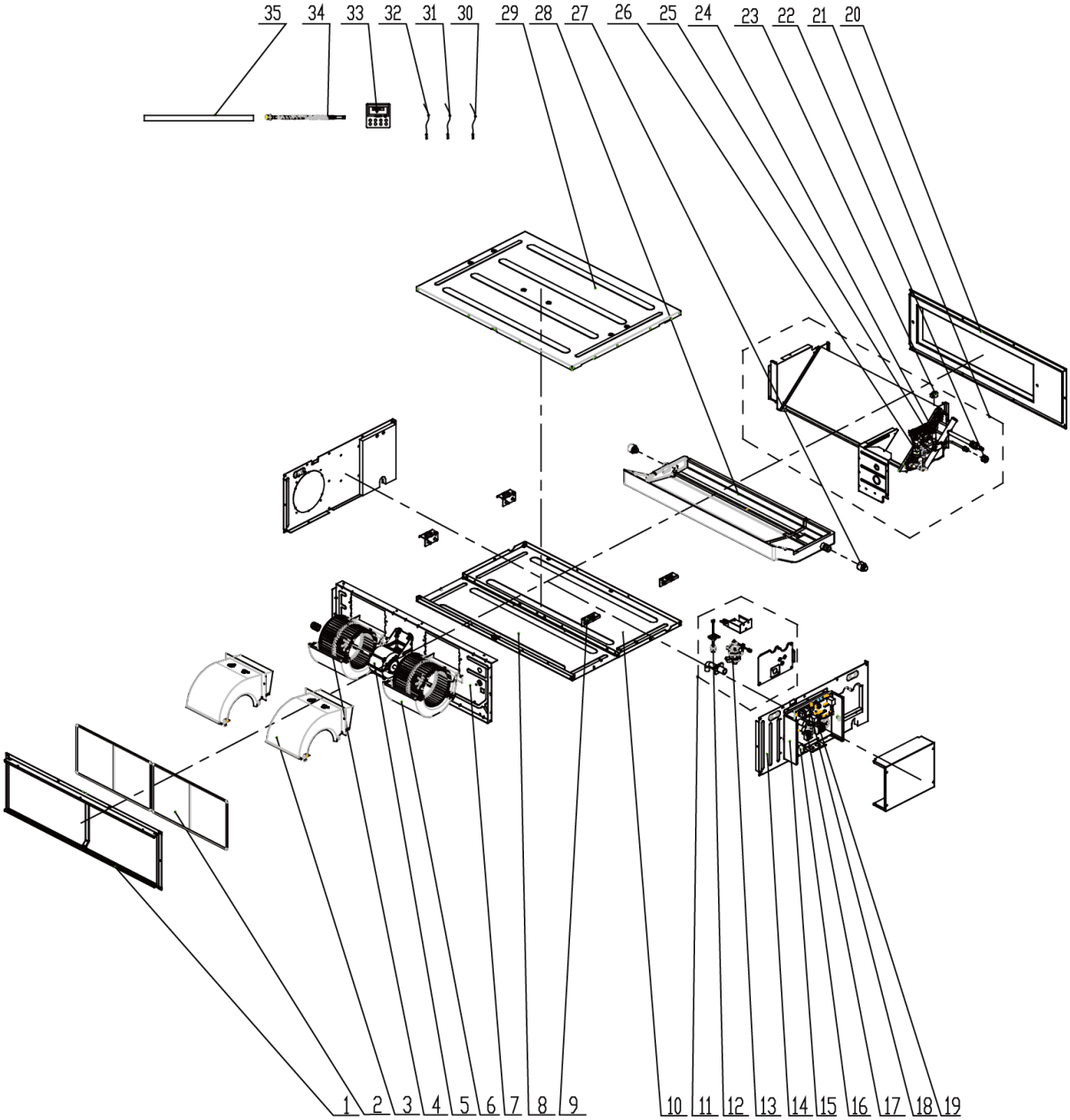

No.	Model	GMV-ND12PHS/B-T(U) / GMV-ND15PHS/B-T(U) / GMV-ND18PHS/B-T(U) / GMV-ND22PHS/B-T(U) / GMV-ND24PHS/B-T(U)	Qty.
	Product Code	CM810N0800/CM810N0770/CM810N0810/CM810N0720/CM810N0730	
	Part Name	Part Code	
1	Centrifugal Fan Assy	017026000002	1
2	Filter Sub-Assy	111001000045	2
3	Propeller Housing(Upper)	26905200078	2
4	Centrifugal Fan	10455200003	2
5	Brushless DC Motor	15705200016	1
6	Propeller Housing(Lower)	26905200079	2
7	Blower Mounting Plate Sub-Assy	01325200079	1
8	Cover Of Air-In	01265200132	1
9	Hook	02112466	4

No.	Model	GMV-ND12PHS/B-T(U) / GMV-ND15PHS/B-T(U) / GMV-ND18PHS/B-T(U) / GMV-ND22PHS/B-T(U) / GMV-ND24PHS/B-T(U)	Qty.
	Product Code	CM810N0800/CM810N0770/CM810N0810/CM810N0720/CM810N0730	
	Part Name	Part Code	
10	Bottom Cover Plate	01265200131	1
11	Seal plate Assy	01495200079	1
12	Water Level Switch	45020216	1
13	Water Pump	43138000058	1
14	Left Side Plate Assy	01315200147	1
15	Electric Box Assy	100002000985	1
16	Inductance	43128000014	1
17	Terminal Board	4201115402	1
18	Main Board	30226000089	1
19	Terminal Board	4201800002601	1
20	Air Outlet Frame Assy	01375200026	1
21	Evaporator Assy	01024100173 0102410017301	1
22	Sealing Cap(Pressure Warning)	2611219201	1
23	Electric Expand Valve Fitting	4304413215	1
24	Electronic Expansion Valve	07334466	1
25	Strainer	0741410000601	1
26	Strainer	07415210	1
27	Choke Plug of Drain Pipe	76815214	2
28	Foam Sub-assy	12505200025	1
29	Top Cover Board Assy	01265200130	1
30	Temperature Sensor	3900005910	1
31	Temperature Sensor	390000592	1
32	Temperature Sensor	390000454	1
33	Display Board	30296000040	1
34	Corrugated Pipe	05015408	1
35	Drain Hose Sub-Assy	05232050	1

Above data is subject to change without notice, please refer the SP in global service website.

Exploded View of GMV-ND30PHS/B-T(U) / GMV-ND36PHS/B-T(U) / GMV-ND42PHS/B-T(U):

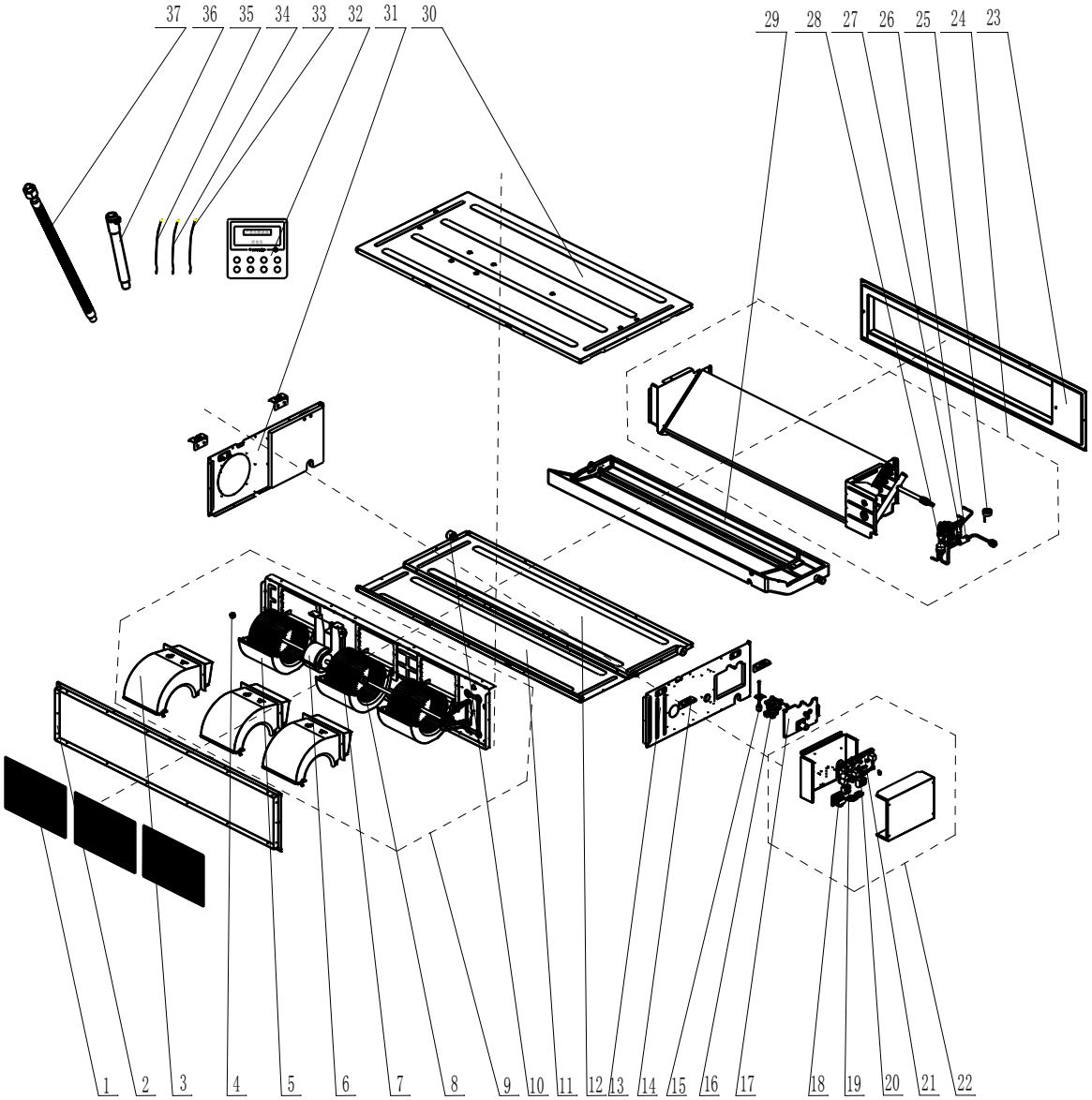

No.	Model	GMV-ND30PHS/B-T(U) / GMV-ND36PHS/B-T(U) / GMV-N42PHS/B-T(U)	Qty.
	Product Code	CM810N0780/CM810N0740/CM810N0750	
	Part Name	Part Code	
1	Filter Sub-Assy	111001000052	3
2	Return Air Frame Sub-Assy	017026000003	1
3	Propeller Housing(Upper)	26905200078	3
4	Fan Bearing	76512210	1
5	Propeller Housing(Lower)	26905200079	3
6	Brushless DC Motor	1570940000601	1
7	Centrifugal Fan	10455200003	3
8	Joint Slack	73018731	1
9	Centrifugal Fan Assy	000052000028	1
10	Choke Plug Of Drain Pipe	76815214	2
11	Cover Plate(Air Return)	01265200123	1
12	Bottom Cover Plate	01265200125	1
13	Left Side Plate Assy	01315200147	1

No.	Model	GMV-ND30PHS/B-T(U) / GMV-ND36PHS/B-T(U) / GMV-N42PHS/B-T(U)	Qty.
	Product Code	CM810N0780/CM810N0740/CM810N0750	
	Part Name	Part Code	
14	Hook	02112466	4
15	Water Level Switch	45020216	1
16	Water Pump	43138000058	1
17	Seal Plate	01495200078	1
18	Reactor	43138000047	1
19	Terminal board	4201115402	1
20	Terminal Board	4201800002601	1
21	Main Board	300002000009	1
22	Electric Box Assy	100002000984	1
23	Air Outlet Frame Assy	01375200023	1
24	Evaporator Assy	011001000070	1
25	Electric Expand Valve Fitting	4304413215	1
26	Strainer	0741410000601	1
27	Electronic Expansion Valve	07334468	1
28	Strainer	07415210	1
29	Foam Sub-Assy	12505200021	1
30	Top Cover Board Assy	01264100105	1
31	Right Side Plate Assy	01315200148	1
32	Display Board	30296000040	1
33	Temperature Sensor	3900005910	1
34	Temperature Sensor	390000592	1
35	Temperature Sensor	390000454	1
36	Drain Hose Sub-Assy	05232050	1
37	Corrugated Pipe	05015408	1

Above data is subject to change without notice, please refer the SP in global service website.

Exploded View of GMV-ND48PHS/B-T(U) / GMV-ND54PHS/B-T(U):

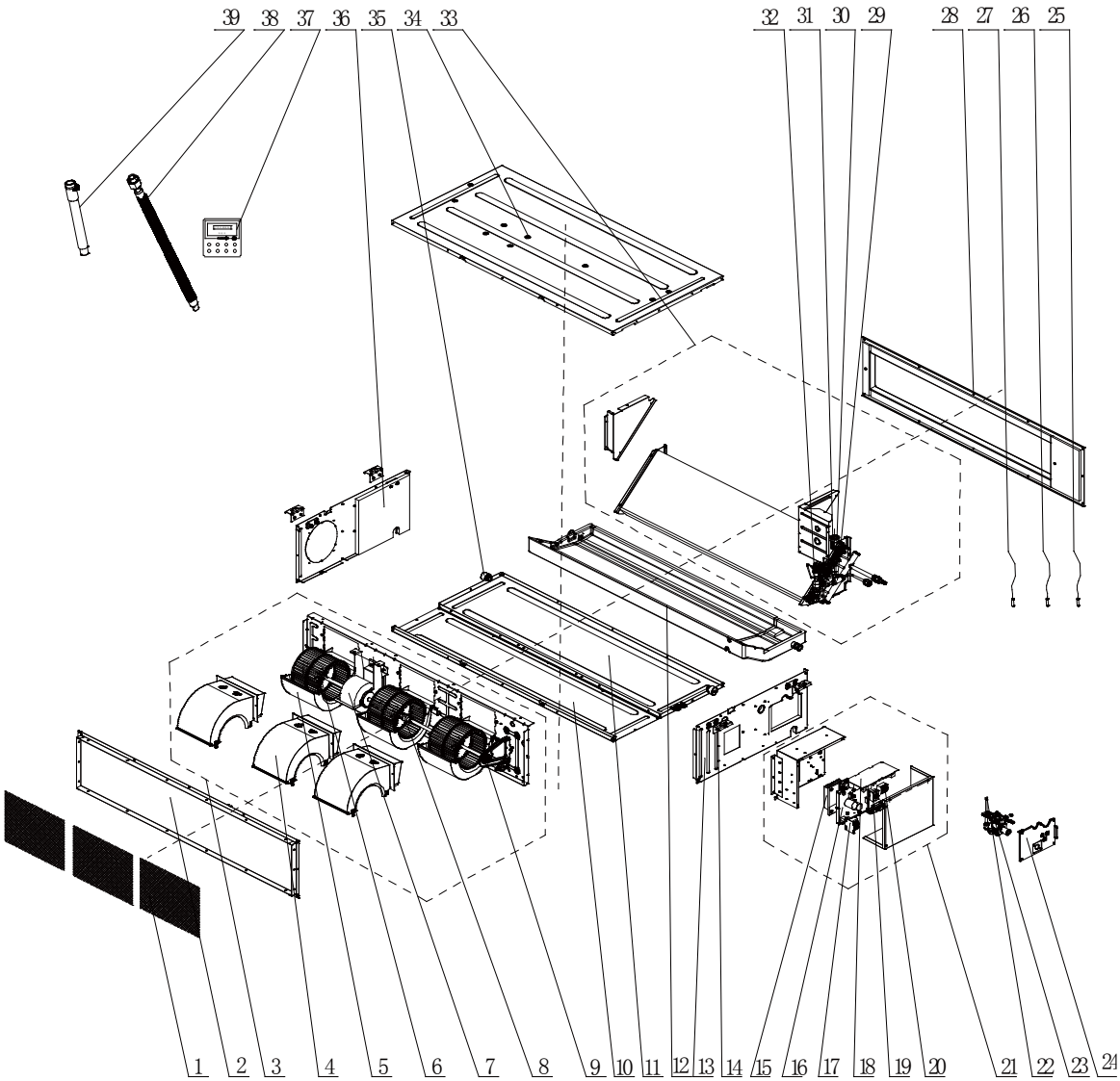

No.	Model	GMV-ND48PHS/B-T(U) / GMV-ND54PHS/B-T(U)	Qty.
	Product Code	CM810N0820/CM810N0760	
	Part Name	Part Code	
1	Filter Sub-Assy	111001000052	3
2	Return Air Frame Sub-Assy	017026000003	1
3	Centrifugal Fan Assy	000052000029	1
4	Propeller Housing(Upper)	26905200078	3
5	Propeller Housing(Lower)	26905200079	3
6	Centrifugal Fan	10455200003	3
7	Brushless DC Motor	1570940000801	1
8	Joint Slack	73018731	1
9	Fan Bearing	76512210	1
10	Cover Plate(Air return)	01265200123	1
11	Bottom Cover Plate	01265200125	1
12	Foam Sub-Assy(Water Tray)	12505200021	1
13	Left Side Plate Assy	01314100118	1
14	Hook	02112466	4
15	Radiator	49018000068	1
16	Main Board	30221000033	1

No.	Model	GMV-ND48PHS/B-T(U) / GMV-ND54PHS/B-T(U)	Qty.
	Product Code	CM810N0820/CM810N0760	
	Part Name	Part Code	
17	Reactor	43138000047	1
18	Main Board	30226000092	1
19	Terminal board	4201115402	1
20	Terminal Board	4201800002601	1
21	Electric Box Assy	100002001512	1
22	Water Level Switch	45020216	1
23	Water Pump	43138000058	1
24	Seal Plate	01495200078	1
25	Temperature Sensor	3900005910	1
26	Temperature Sensor	390000592	1
27	Temperature Sensor	390000454	1
28	Air Outlet Frame Assy	01375200023	1
29	Strainer	0741410000601	1
30	Electric Expand Valve Fitting	4304413215	1
31	Electronic Expansion Valve	07334468	1
32	Strainer	07415210	1
33	Evaporator Assy	011001000070 011001000238	1
34	Top Cover Board Assy	01264100105	1
35	Choke Plug Of Drain Pipe	76815214	2
36	Right Side Plate Assy	01315200148	1
37	Display Board	30296000040	1
38	Corrugated Pipe	05015408	1
39	Drain Hose Sub-Assy	05232050	1

Above data is subject to change without notice, please refer the SP in global service website.

Exploded View of GMV-ND72PH/B-T(U) / GMV-ND96PH/B-T(U):

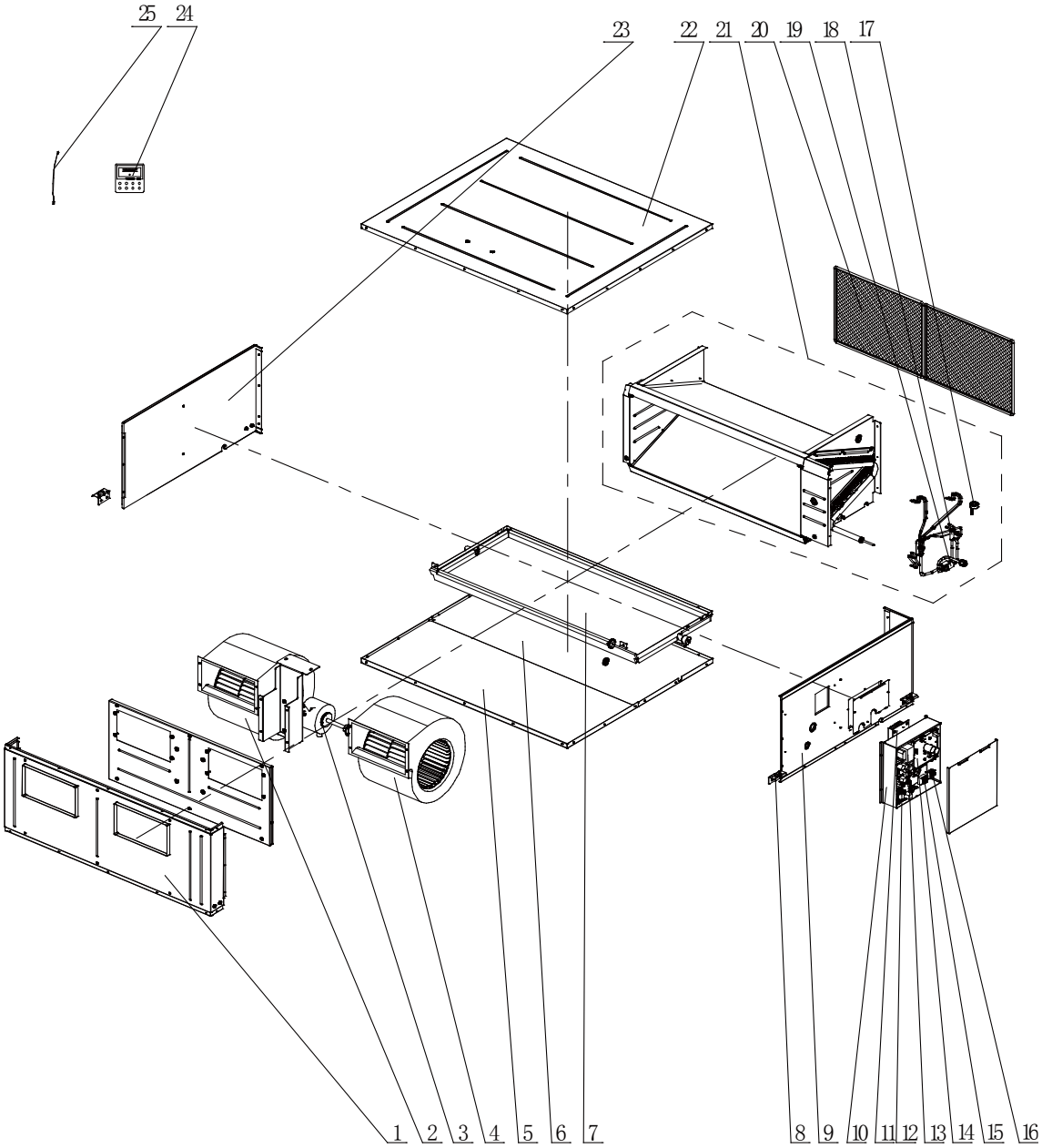

No.	Model	GMV-ND72PH/B-T(U)	Qty.
	Product Code	CM810N1600	
	Part Name	Part Code	
1	Front Side Plate Sub-Assy	017101060001	1
2	Motor for Centrifugal Fan	103004000106	1
3	Brushless DC Motor	15704100009	1
4	Motor for Centrifugal Fan	103004000105	1
5	Bottom Cover Plate	012147060003	2
6	Bottom Cover Plate	012147060002	1
7	Water Tray Assy	000069060003	1
8	Hook	02112466	4
9	Right Side Plate	012056060002	1
10	Electric Box Assy	100002060073	1
11	Radiator	49018000068	1
12	Main Board	30226000092	1

No.	Model	GMV-ND72PH/B-T(U)	Qty.
	Product Code	CM810N1600	
	Part Name	Part Code	
13	Reactor	43130189	1
14	Main Board	30221000023	1
15	Terminal Board	4201800002601	1
16	Terminal Board	420001000002	1
17	Electric Expand Valve Fitting	4304413205	1
18	Electronic Expansion Valve	43044100190	2
19	Strainer	0741410000601	2
20	Filter Sub-Assy	111001060005	1
21	Evaporator Assy	011001060038	1
22	Top Cover	012148060002	1
23	Left Side Plate	012055060002	1
24	Display Board	30296000040	1
25	Sensor Sub-assy	39008000103G	1

Above data is subject to change without notice, please refer the SP in global service website.

No.	Model	GMV-ND96PH/B-T(U)	Qty.
	Product Code	CM810N1590	
	Part Name	Part Code	
1	Front Side Plate Sub-Assy	017101060001	1
2	Motor for Centrifugal Fan	103004000106	1
3	Brushless DC Motor	15704100009	1
4	Motor for Centrifugal Fan	103004000105	1
5	Bottom Cover Plate	012147060003	2
6	Bottom Cover Plate	012147060002	1
7	Water Tray Assy	000069060003	1
8	Hook	02112466	4
9	Right Side Plate	012056060002	1
10	Electric Box Assy	100002060073	1
11	Radiator	49018000068	1
12	Main Board	30226000092	1
13	Reactor	43130189	1
14	Main Board	30221000023	1
15	Terminal Board	4201800002601	1
16	Terminal Board	420001000002	1
17	Electric Expand Valve Fitting	4304413205	1
18	Electronic Expansion Valve	43044100190	2
19	Strainer	0741410000601	2
20	Filter Sub-Assy	111001060005	1
21	Evaporator Assy	011001060013	1
22	Top Cover	012148060002	1
23	Left Side Plate	012055060002	1
24	Display Board	30296000040	1
25	Sensor Sub-assy	39008000103G	1

Above data is subject to change without notice, please refer the SP in global service website.

5.12 Air Handler type Indoor Unit

GMV-ND**A/A-T(U):

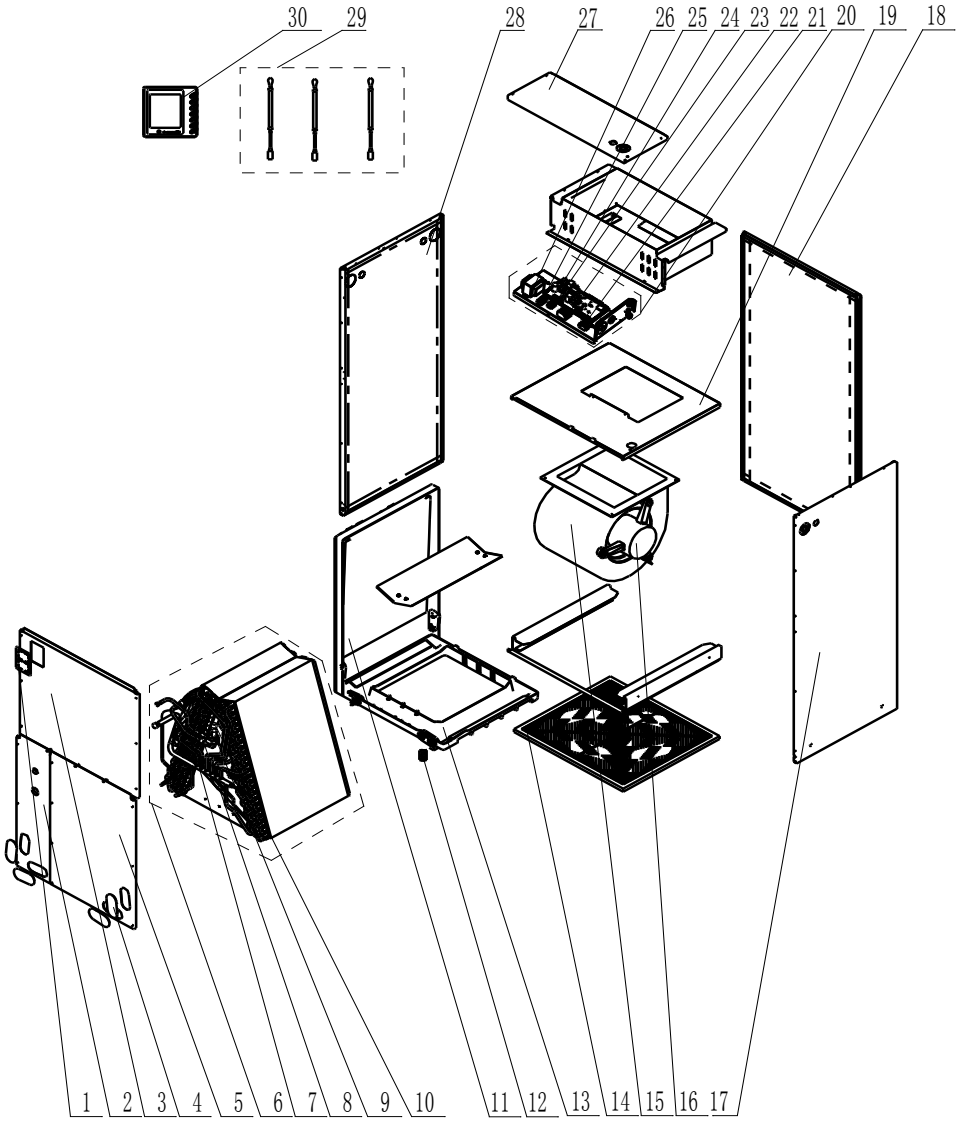

Exploded View of GMV-ND09A/A-T(U) / GMV-ND12A/A-T(U)

No.	Model	GMV-ND09A/A-T(U) GMV-ND12A/A-T(U)	Qty.
	Product Code	CM810N1900 CM810N1910	
	Part Name	Part Code	
1	insulating board	75142201	1
2	Lower cover plate 1	01264100070	1
3	Top Cover Board Sub-assy	01262200007	1
4	Plastic Cover	26902209	4
5	Lower cover plate sub-assy 2	01262200009	1
6	Evaporator Assy	011001060571	1
7	Current Divider	035032060003	1
8	Strainer	0721304401 0721200102	1 1
9	Electronic Expansion Valve	07334463	1
10	Electric Expand Valve Fitting	4304413219	1

No.	Model	GMV-ND09A/A-T(U) GMV-ND12A/A-T(U)	Qty.
	Product Code	CM810N1900 CM810N1910	
	Part Name	Part Code	
11	Subsidiary water tray	2690220000201	1
12	Choke Plug	76718209	8
13	Main water Tray	2690220000101	1
14	Filter Sub-Assy	1172220202	1
15	Motor for Centrifugal Fan	1570220101	1
16	Fan Motor	150104000014	1
17	Right Side Plate Sub-Assy	01312200007	1
18	Rear Side Plate Sub-Assy	01312200009	1
19	Blower Mounting Plate	012046060016	1
20	Electric cabinet board	100003060687	1
21	Terminal Board	42000100000102	1
22	Terminal Board	42200006000401	1
23	Terminal Board	42011147	1
24	Main Board	300002000321	1
25	Terminal Board	42011103	1
26	Transformer	43110286	1
27	Top Cover Plate Sub-Assy	01262200010	1
28	Left Side Plate Sub-Assy	01312200005	1
29	Sensor Sub-Assy	39008000103G	1
30	Display Board	30296000040	1

Above data is subject to change without notice, please refer the SP in global service website.

Exploded View of GMV-ND18A/A-T(U) / GMV-ND24A/A-T(U) / GMV-ND30A/A-T(U)

No.	Model	GMV-ND18A/A-T(U) GMV-ND24A/A-T(U) GMV-ND30A/A-T(U)	Qty.
	Product Code	CM810N1890 CM810N0660 CM810N0670	
	Part Name	Part Code	
1	insulating board	75142201	1
2	Lower cover plate 1	01264100070	1
3	Top Cover Board Sub-Assy	01262200007	1
4	Plastic Cover	26902209	4
5	Lower cover plate sub-assy 2	01262200009	1
6	Evaporator Assy	01024100162	1
7	Current Divider	072241303	1
8	Strainer	0721200101	2
9	Electronic Expansion Valve	07334466	1
10	Electric Expand Valve Fitting	4304413205	1
11	Secondary Water Tray	2690220000201	1
12	Choke Plug	76718209	8
13	Main water Tray	2690220000101	1
14	Filter Sub-Assy	1172220202	1

No.	Model	GMV-ND18A/A-T(U) GMV-ND24A/A-T(U) GMV-ND30A/A-T(U)	Qty.
	Product Code	CM810N1890 CM810N0660 CM810N0670	
	Part Name	Part Code	
15	Motor for Centrifugal Fan	1570220101	1
16	Fan Motor	150104000014	1
17	Right Side Plate Sub-Assy	01312200007	1
18	Rear Side Plate Sub-Assy	01312200009	1
19	Blower Mounting Plate	0132220000801	1
20	Electric cabinet board	100003000225	1
21	Terminal Board	42000100000102	1
22	Terminal Board	4201800002601	1
23	Terminal Board	42011147	1
24	Main Board	300002000321	1
25	Terminal Board	42011103	1
26	Transformer	43110286	1
27	Top Cover Plate Sub-assy	01262200010	1
28	Left Side Plate Sub-assy	01312200005	1
29	Sensor Sub-assy	39008000103G	1
30	Display Board	30296000040	1

Above data is subject to change without notice, please refer the SP in global service website.

Exploded View of GMV-ND36A/A-T(U) / GMV-ND42A/A-T(U)

No.	Model	GMV-ND36A/A-T(U) GMV-ND42A/A-T(U)	Qty.
	Product Code	CM810N0700 CM810N0690	
	Part Name	Part Code	
1	insulating board	75142201	1
2	Lower cover plate 1	01264100069	1
3	Top Cover Board Sub-assy	01262200019	1
4	Plastic Cover	26902209	4
5	Lower cover plate sub-assy 2	01262200017	1
6	Evaporator Assy	01024100166	1
7	Current Divider	0722443501	1
8	Strainer	0721200101	2
9	Electronic Expansion Valve	07334468	1
10	Electric Expand Valve Fitting	4304413205	1
11	Secondary Water Tray	26902205	1
12	Choke Plug	76718209	8
13	Main water Tray	26902204	1
14	Filter Sub-Assy	1172220201	1
15	Motor for Centrifugal Fan	1570220201	1
16	Fan Motor	150104000014	1
17	Right Side Plate Sub-Assy	01312200017	1
18	Rear Side Plate Sub-Assy	01312200019	1

No.	Model	GMV-ND36A/A-T(U) GMV-ND42A/A-T(U)	Qty.
	Product Code	CM810N0700 CM810N0690	
	Part Name	Part Code	
19	Blower Mounting Plate	0132220000601	1
20	Electric cabinet board	100003000225	1
21	Terminal Board	4201115402	1
22	Terminal Board	4201800002601	1
23	Terminal Board	42011147	1
24	Main Board	300002000321	1
25	Terminal Board	42011103	1
26	Transformer	43110286	1
27	Top Cover Plate Sub-assy	01262200013	1
28	Left Side Plate Sub-assy	01312200015	1
29	Sensor Sub-assy	39008000103G	1
30	Display Board	30296000040	1

Above data is subject to change without notice, please refer the SP in global service website.

Exploded View of GMV-ND48A/A-T(U) / GMV-ND54A/A-T(U)

No.	Model	GMV-ND48A/A-T(U) GMV-ND54A/A-T(U)	Qty.
	Product Code	CM810N0680 CM810N0710	
	Part Name	Part Code	
1	insulating board	75142201	1
2	Lower cover plate 1	01264100065	1
3	Top Cover Board Sub-assy	01262200024	1
4	Plastic Cover	26902209	4
5	Lower cover plate sub-assy 2	01262200026	1
6	Evaporator Assy	01024100159	1
7	Current Divider	0722443501	1
8	Strainer	0721200101	2
9	Electronic Expansion Valve	07334468	1
10	Electric Expand Valve Fitting	4304413205	1
11	Secondary Water Tray	26902205	1
12	Choke Plug	76718209	8
13	Main water Tray	26902206	1
14	Filter Sub-Assy	11722202	1
15	Motor for Centrifugal Fan	1570220301	1
16	Fan Motor	150104000013	1
17	Right Side Plate Sub-Assy	01312200026	1
18	Rear Side Plate Sub-Assy	01312200028	1
19	Blower Mounting Plate	0132220001401	1
20	Electric cabinet board	100003000224	1
21	Terminal Board	4201115402	1
22	Terminal Board	4201800002601	1
23	Terminal Board	42011147	1
24	Main Board	300002000321	1

No.	Model	GMV-ND48A/A-T(U) GMV-ND54A/A-T(U)	Qty.
	Product Code	CM810N0680 CM810N0710	
	Part Name	Part Code	
25	Terminal Board	42011103	1
26	Transformer	43110286	1
27	Top Cover Plate Sub-assy	01262200028	1
28	Left Side Plate Sub-assy	01312200030	1
29	Sensor Sub-assy	39008000103G	1
30	Display Board	30296000040	1

Above data is subject to change without notice, please refer the SP in global service website.

GMV-ND**A/B-T(U):

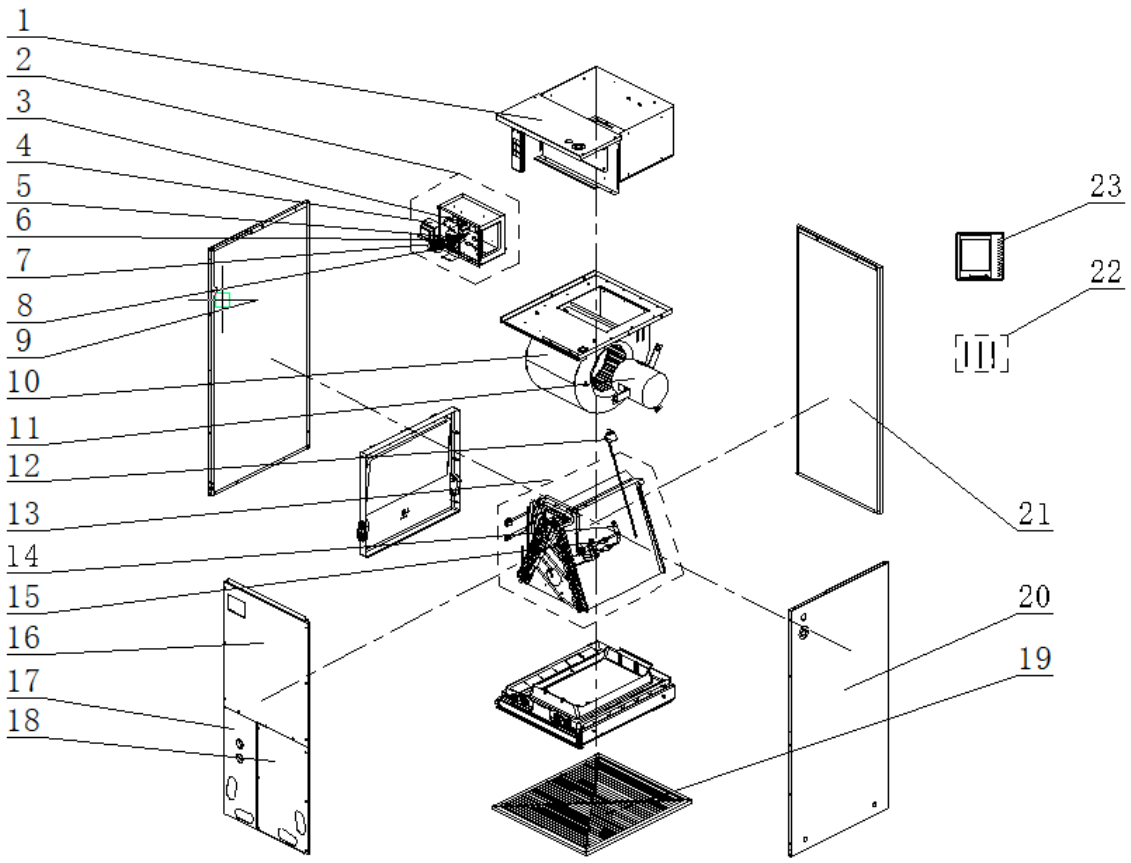

Exploded View of GMV-ND09A/B-T(U) / GMV-ND12A/B-T(U) /GMV-ND18A/B-T(U)/ GMV-ND24A/B-T(U) / GMV-ND30A/B-T(U)：

No.	Model	GMV-ND09A/B-T(U) GMV-ND12A/B-T(U) GMV-ND18A/B-T(U) GMV-ND24A/B-T(U) GMV-ND30A/B-T(U)	Qty.
	Product Code	CM810N2340 CM810N2280 CM810N2300 CM810N2350 CM810N2290	
	Part Name	Part Code	
1	Top Cover Plate	000051060162	1
2	Electric Box Assy	100002072139	1
3	Main Board	300002062240	1
4	Transformer	43110286	1
5	Terminal Board	42200006005404	1
6	Terminal Board	42011147	1
7	Terminal Board	42011103 42000100000102	1 1
8	Terminal Board	017214060007	1
9	Left Side Plate	017037060269	1
10	Motor for Centrifugal Fan	1570220101	1
11	Brushless DC Motor	15010400001401	1
12	Electric Expand Valve Fitting	4304413271	1
13	Evaporator Assy	011001061809	1
14	Electronic Expansion Valve	072009060047	1
15	Strainer	0721304401	2
16	Top Cover	01262200007	1
17	Bottom Cover Plate 1	01264100070	1
18	Bottom Cover Plate 2	01262200009	1
19	Filter Sub-Assy	111001060269	1
20	Right Side Plate	000130060129	1
21	Rear Side Plate	01312200009	1
22	Sensor Sub-assy	39008000103G	1
23	Display Board	300001060299	1

Above data is subject to change without notice, please refer the SP in global service website.

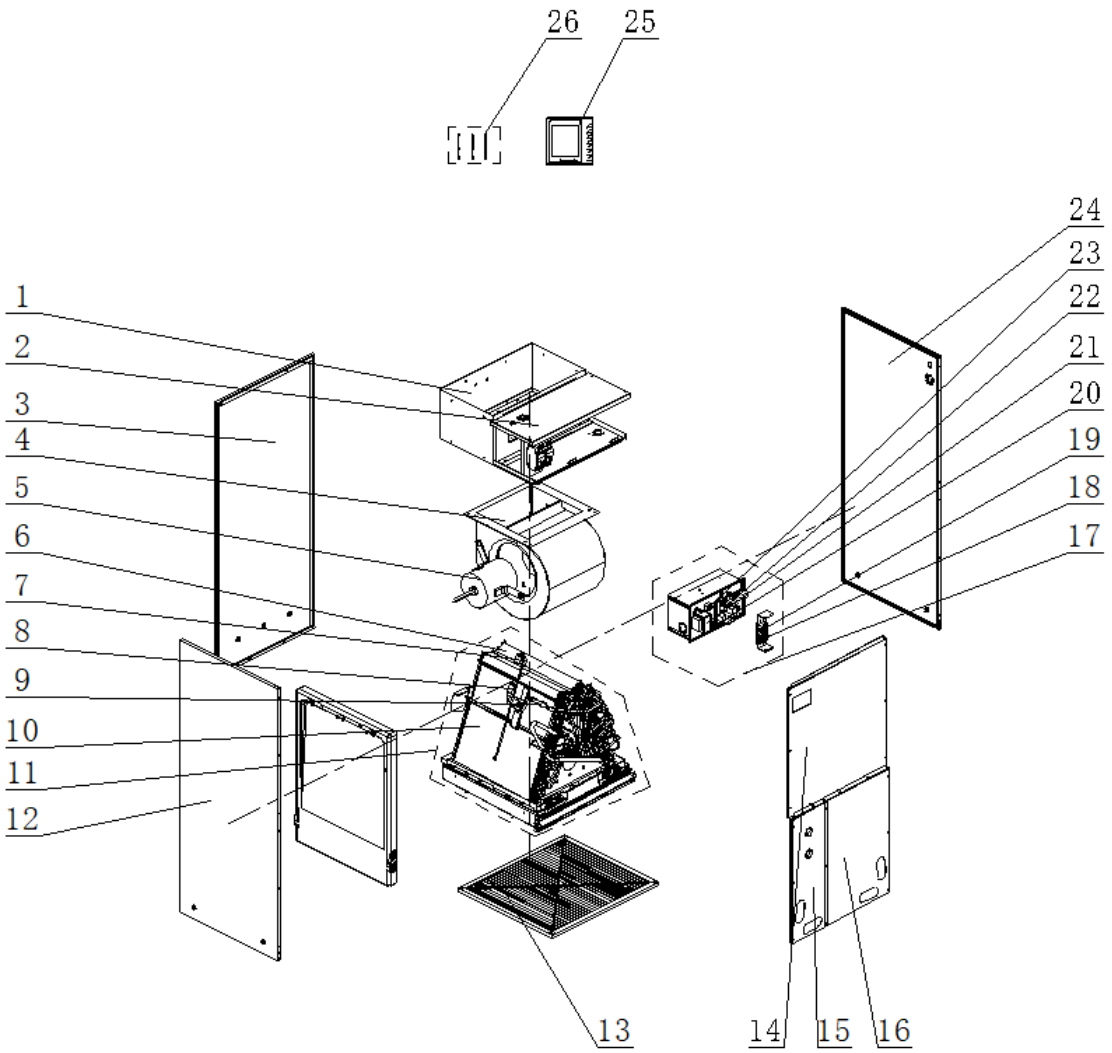

Exploded View of GMV-ND36A/B-T(U) / GMV-ND42A/B-T(U)：

No.	Model	GMV-ND36A/B-T(U) GMV-ND42A/B-T(U)	Qty.
	Product Code	CM810N2330 CM810N2260	
	Part Name	Part Code	
1	Side Plate	012010060972	1
2	Top Cover Sub-Assy	000051060106	1
3	Rear Side Plate	01312200019	1
4	Motor for Centrifugal Fan	1570220201	1
5	Brushless DC Motor	15010400001401	1
6	Evaporator Assy	010001060292	1
7	Electric Expand Valve Fitting	4304413205	1
8	Electronic Expansion Valve	072009060045	1
9	Strainer	0721200102	2
10	Evaporator Assy	010001060291	1
11	Evaporator Assy	011001061638	1
12	Left Side Plate	01312200015	1
13	Filter Sub-Assy	111001060160	1
14	Top Cover	01262200019	2
15	Bottom Cover Plate 1	01264100067	1

No.	Model	GMV-ND36A/B-T(U) GMV-ND42A/B-T(U)	Qty.
	Product Code	CM810N2330 CM810N2260	
	Part Name	Part Code	
16	Bottom Cover Plate 2	01262200018	1
17	Electric Box Assy	100002071303	1
18	Terminal Board	42000100000102	1
19	Terminal Board	42200006005404	1
20	Terminal Board	42011103	1
21	Transformer	43110286	1
22	Main Board	300002062240	1
23	Terminal Board	42011147	1
24	Right Side Plate	012056060205	1
25	Display Board	300001060299	1
26	Sensor Sub-Assy	39008000103G	1

Above data is subject to change without notice, please refer the SP in global service website.

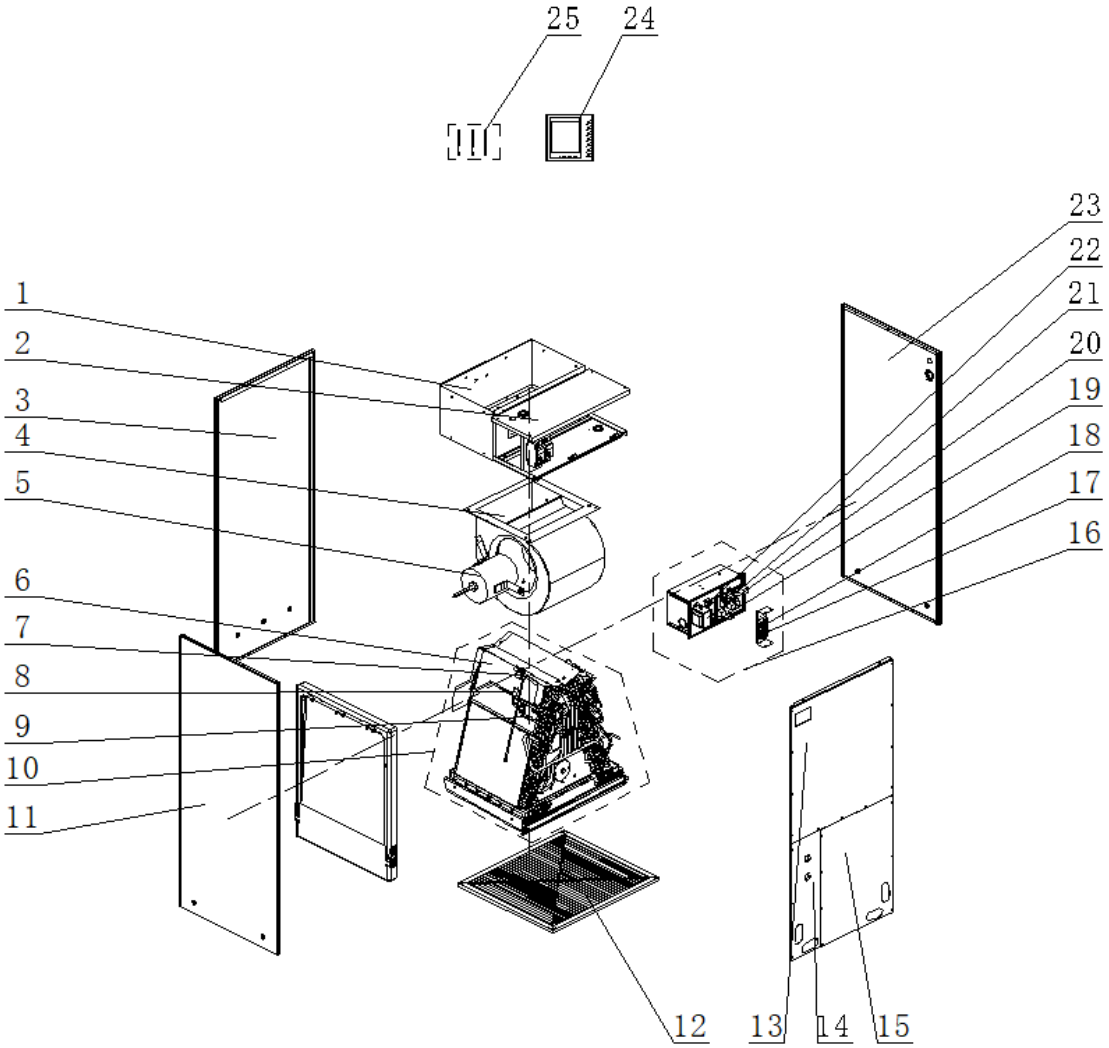

Exploded View of GMV-ND48A/B-T(U) / GMV-ND54A/B-T(U) / GMV-ND60A/B-T(U):

No.	Model	GMV-ND48A/B-T(U) GMV-ND54A/B-T(U) GMV-ND60A/B-T(U)	Qty.
	Product Code	CM810N2310 CM810N2320 CM810N2270	
	Part Name	Part Code	
1	Air Scroll	012277060111	1
2	Cover Plate	017011060115	1
3	Rear Side Plate	017051060118	1
4	Motor for Centrifugal Fan	1570220301	1
5	Brushless DC Motor	15010400001301	1
6	Evaporator Sub-Assy	010001060326	2
7	Electric Expand Valve Fitting	4304413219	1
8	Electronic Expansion Valve	072009060045	1
9	Strainer	0721200102	2
10	Evaporator Assy	011001061626	1
11	Left Side Plate	017037060170	1
12	Filter Sub-Assy	111001060188	1
13	Top Cover	017011060115	1
14	Bottom Cover Plate 1	01264100065	2

No.	Model	GMV-ND48A/B-T(U) GMV-ND54A/B-T(U) GMV-ND60A/B-T(U)	Qty.
	Product Code	CM810N2310 CM810N2320 CM810N2270	
	Part Name	Part Code	
15	Bottom cover plate 2	01262200026	1
16	Electric Box Assy	100002071303	1
17	Terminal Board	42000100000102	1
18	Terminal Board	42200006005404	1
19	Terminal Board	42011103	1
20	Transformer	43110286	1
21	Main Board	300002062240	1
22	Terminal Board	42011147	1
23	Right Side Plate	000130060099	1
24	Display Board	300001060299	1
25	Sensor Sub-assy	39008000103G	1

Above data is subject to change without notice, please refer the SP in global service website.

5.13 AHU-KIT

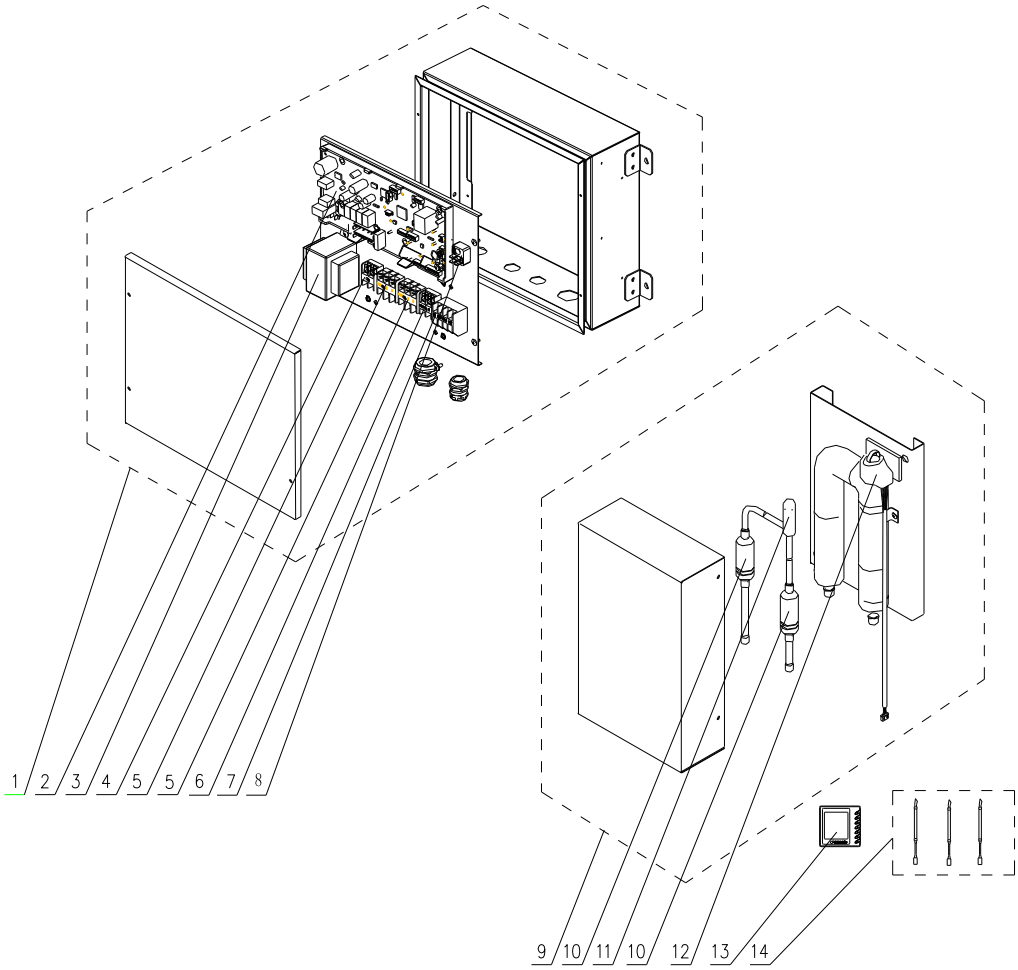

Exploded View of GMV-N12U/A-T(U)

No.	Model	GMV-N12U/A-T(U)	Qty.
	Product Code	CN750N0101	
	Part Name	Part Code	
1	Electric Box Assy	100002002825	1
2	Main Board	30226000081	1
3	Transformer	43110286	1
4	Terminal Board	4201115402	1
5	Terminal Board	4201025901	1
6	Terminal Board	42011154	1
7	Terminal Board	4201800002601	1
8	Terminal Board	42011147	1
9	Electronic Expansion Valve assy	030174000026	1
10	Strainer	0741410000601	2
11	Electronic Expansion Valve	07334463	1
12	Electric Expand Valve Fitting	4304413239	1
13	Display Board	30296000040	1
14	Sensor Sub-assy	39008000130G	1

Above data is subject to change without notice, please refer the SP in global service website.

Exploded View of GMV-N24U/A-T(U)

No.	Model	GMV-N24U/A-T(U)	Qty.
	Product Code	CN750N0061	
	Part Name	Part Code	
1	Electric Box Assy	100002002825	1
2	Main Board	30226000081	1
3	Transformer	43110286	1
4	Terminal Board	4201115402	1
5	Terminal Board	4201025901	1
6	Terminal Board	42011154	1
7	Terminal Board	4201800002601	1
8	Terminal Board	42011147	1
9	Electronic Expansion Valve assy	030174000027	1
10	Strainer	0741410000601	2
11	Electronic Expansion Valve	07334466	1
12	Electric Expand Valve Fitting	4304413239	1
13	Display Board	30296000040	1
14	Sensor Sub-assy	39008000130G	1

Above data is subject to change without notice, please refer the SP in global service website.

Exploded View of GMV-N48U/A-T(U)

No.	Model	GMV-N48U/A-T(U)	Qty.
	Product Code	CN750N0071	
	Part Name	Part Code	
1	Electric Box Assy	100002002825	1
2	Main Board	30226000081	1
3	Transformer	43110286	1
4	Terminal Board	4201115402	1
5	Terminal Board	4201025901	1
6	Terminal Board	42011154	1
7	Terminal Board	4201800002601	1
8	Terminal Board	42011147	1
9	Electronic Expansion Valve assy	43044100226	1
10	Strainer	0741410000601	2
11	Electronic Expansion Valve	07334412	1
12	Electric Expand Valve Fitting	4304413239	1
13	Display Board	30296000040	1
14	Sensor Sub-assy	39008000130G	1

Above data is subject to change without notice, please refer the SP in global service website.

Exploded View of GMV-N96U/A-T(U)

No.	Model	GMV-N96U/A-T(U)	Qty.
	Product Code	CN750N0081	
	Part Name	Part Code	
1	Electric Box Assy	100002002825	1
2	Main Board	30226000081	1
3	Transformer	43110286	1
4	Terminal Board	4201115402	1
5	Terminal Board	4201025901	1
6	Terminal Board	42011154	1
7	Terminal Board	4201800002601	1
8	Terminal Board	42011147	1
9	Electronic Expansion Valve assy	43044100215	1
10	Strainer	0741410000601	2
11	Electronic Expansion Valve	07331139	1
12	Electric Expand Valve Fitting	4304413239	1
13	Display Board	30296000040	1
14	Sensor Sub-assy	39008000130G	1

Above data is subject to change without notice, please refer the SP in global service website.

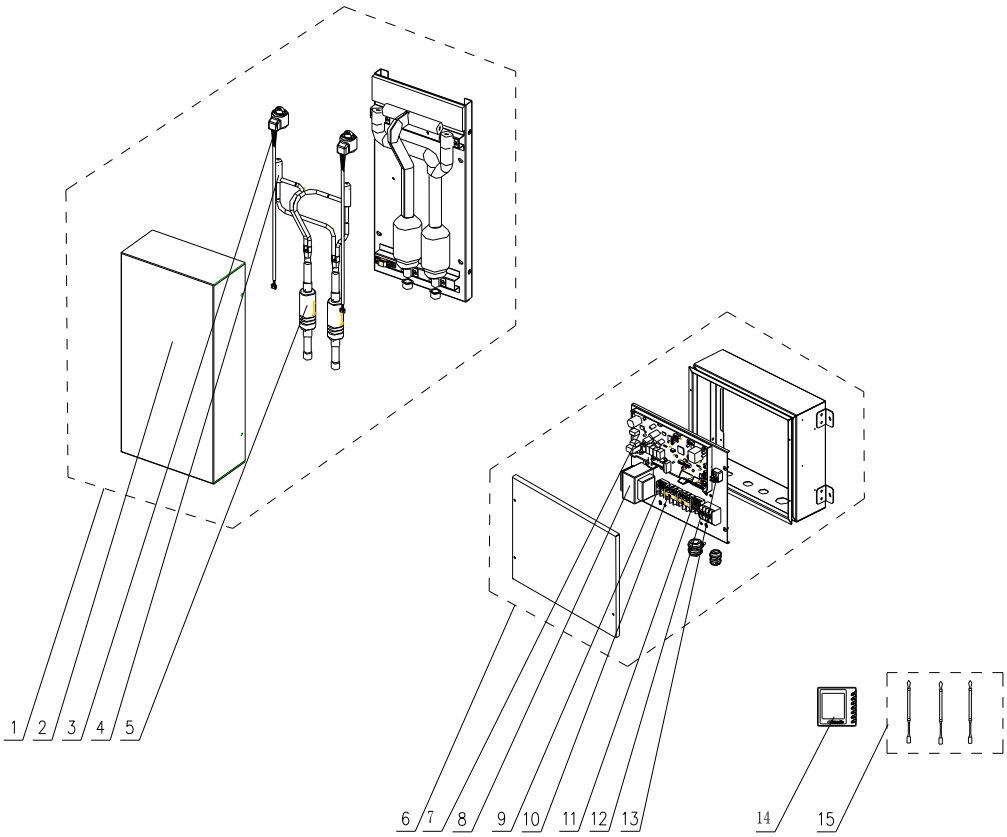

Exploded View of GMV-N192U/A-T(U)

No.	Model	GMV-N192U/A-T(U)	Qty.
	Product Code	CN750N0091	
	Part Name	Part Code	
1	Electronic Expansion Valve assy	43044100220	1
2	Cover Plate	01264100063P	1
3	Electric Expand Valve Fitting	4304413239	2
4	Electronic Expansion Valve	07331139	2
5	Bidirection Strainer	0721004401	2
6	Electric Box Assy	100002002825	1
7	Main Board	30226000081	1
8	Transformer	43110286	1
9	Terminal Board	4201115402	1
10	Terminal Board	4201025901	2
11	Terminal Board	42011154	1
12	Terminal Board	4201800002601	1
13	Terminal Board	42011147	1
14	Display Board	30296000040	1
15	Sensor Sub-assy	39008000130G	1

Above data is subject to change without notice, please refer the SP in global service website.

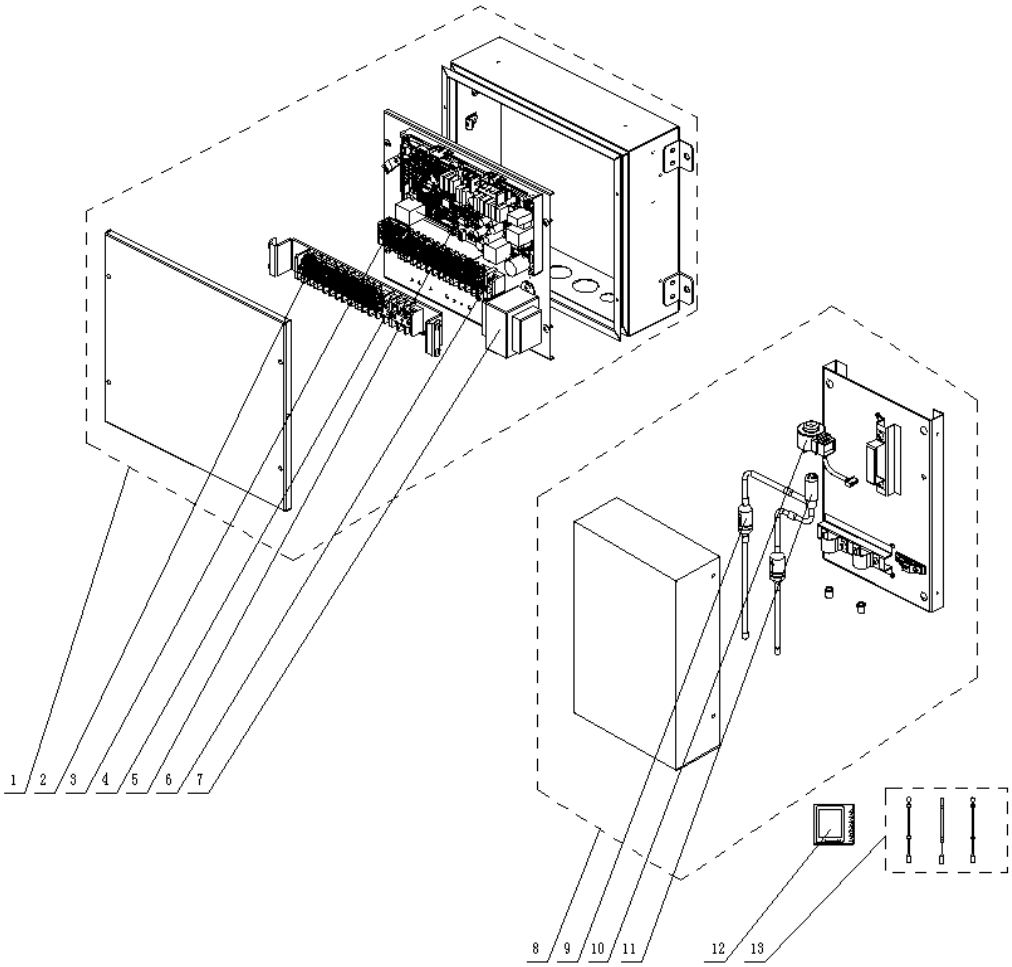

Exploded View of GMV-N12U/C-T(U)

No.	Model	GMV-N12U/C-T(U)	Qty.
	Product Code	CN750N0250	
	Part Name	Part Code	
1	Electric Box Assy	100002070138	1
2	Terminal Board	422000000009	2
3	Terminal Board	42200006000401	1
4	Terminal Board	42200006000901	1
5	Main Board	300002060941	1
6	Terminal Board	42000100000102	1
7	Transformer	450002060013	1
8	Electronic Expansion Valve assy	030174060015	1
9	Strainer	07415200002	2
10	Electric Expand Valve Fitting	4304000112	1
11	Electronic Expansion Valve	072009000006	1
12	Display Board	30296000040	1
13	Sensor Sub-assy	390002060021	1

Above data is subject to change without notice, please refer the SP in global service website.

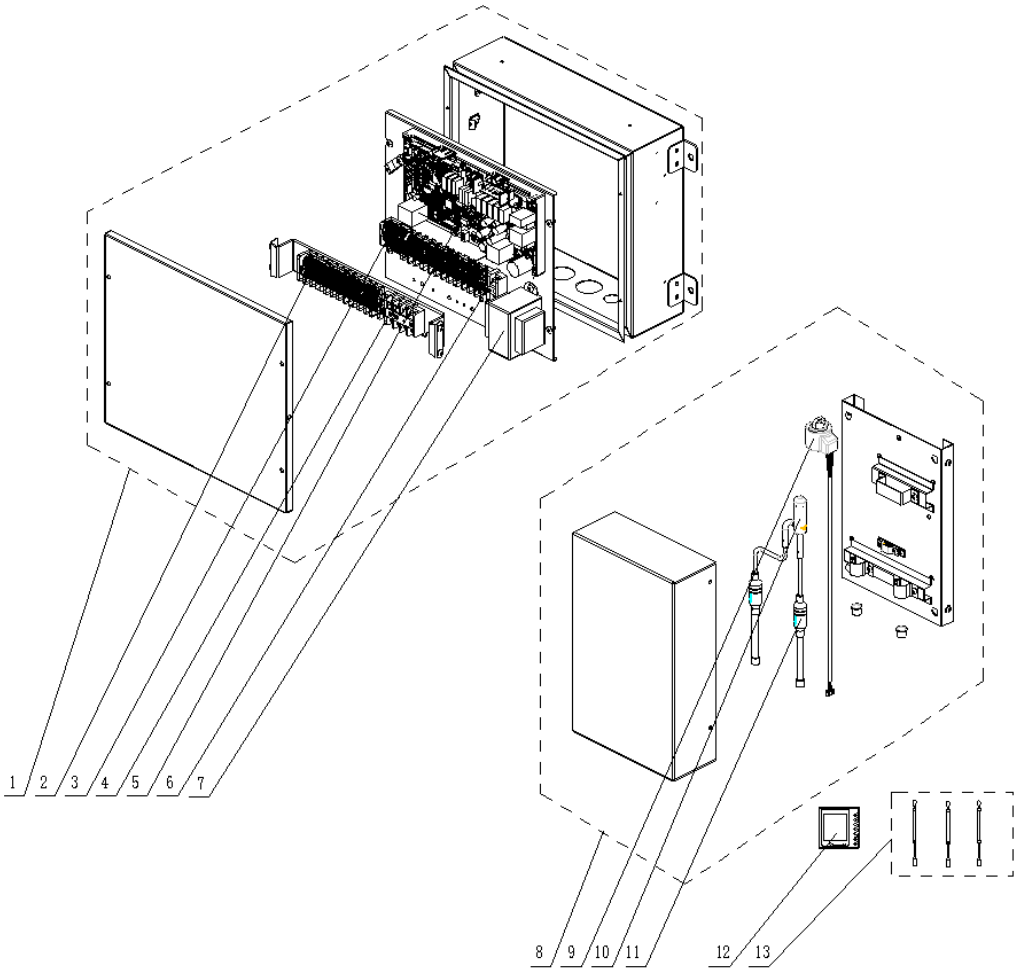

Exploded View of GMV-N24U/C-T(U)

No.	Model	GMV-N24U/C-T(U)	Qty.
	Product Code	CN750N0230	
	Part Name	Part Code	
1	Electric Box Assy	100002070138	1
2	Terminal Board	422000000009	2
3	Terminal Board	42200006000401	1
4	Terminal Board	42200006000901	1
5	Main Board	300002060941	1
6	Terminal Board	42000100000102	1
7	Transformer	450002060013	1
8	Electronic Expansion Valve assy	030174060014	1
9	Electric Expand Valve Fitting	4304413239	1
10	Electronic Expansion Valve	072009000001	1
11	Strainer	0741520000201	2
12	Display Board	30296000040	1
13	Sensor Sub-assy	390002060021	1

Above data is subject to change without notice, please refer the SP in global service website.

Exploded View of GMV-N48U/C-T(U)

No.	Model	GMV-N48U/C-T(U)	Qty.
	Product Code	CN750N0240	
	Part Name	Part Code	
1	Electric Box Assy	100002070138	1
2	Terminal Board	422000000009	2
3	Terminal Board	42200006000401	1
4	Terminal Board	42200006000901	1
5	Main Board	300002060941	1
6	Terminal Board	42000100000102	1
7	Transformer	450002060013	1
8	Electronic Expansion Valve assy	030174060012	1
9	Electric Expand Valve Fitting	4304413239	1
10	Electronic Expansion Valve	43044100172	1
11	Strainer	0741520000201	2
12	Display Board	30296000040	1
13	Sensor Sub-assy	390002060021	1

Above data is subject to change without notice, please refer the SP in global service website.

Exploded View of GMV-N96U/C-T(U)

No.	Model	GMV-N96U/C-T(U)	Qty.
	Product Code	CN750N0210	
	Part Name	Part Code	
1	Electric Box Assy	100002070138	1
2	Terminal Board	422000000009	2
3	Terminal Board	42200006000401	1
4	Terminal Board	42200006000901	1
5	Main Board	300002060941	1
6	Terminal Board	42000100000102	1
7	Transformer	450002060013	1
8	Electronic Expansion Valve assy	030174060013	1
9	Electric Expand Valve Fitting	4304413239	1
10	Electronic Expansion Valve	43044100190	1
11	Strainer	0741520000201	2
12	Display Board	30296000040	1
13	Sensor Sub-assy	390002060021	1

Above data is subject to change without notice, please refer the SP in global service website.

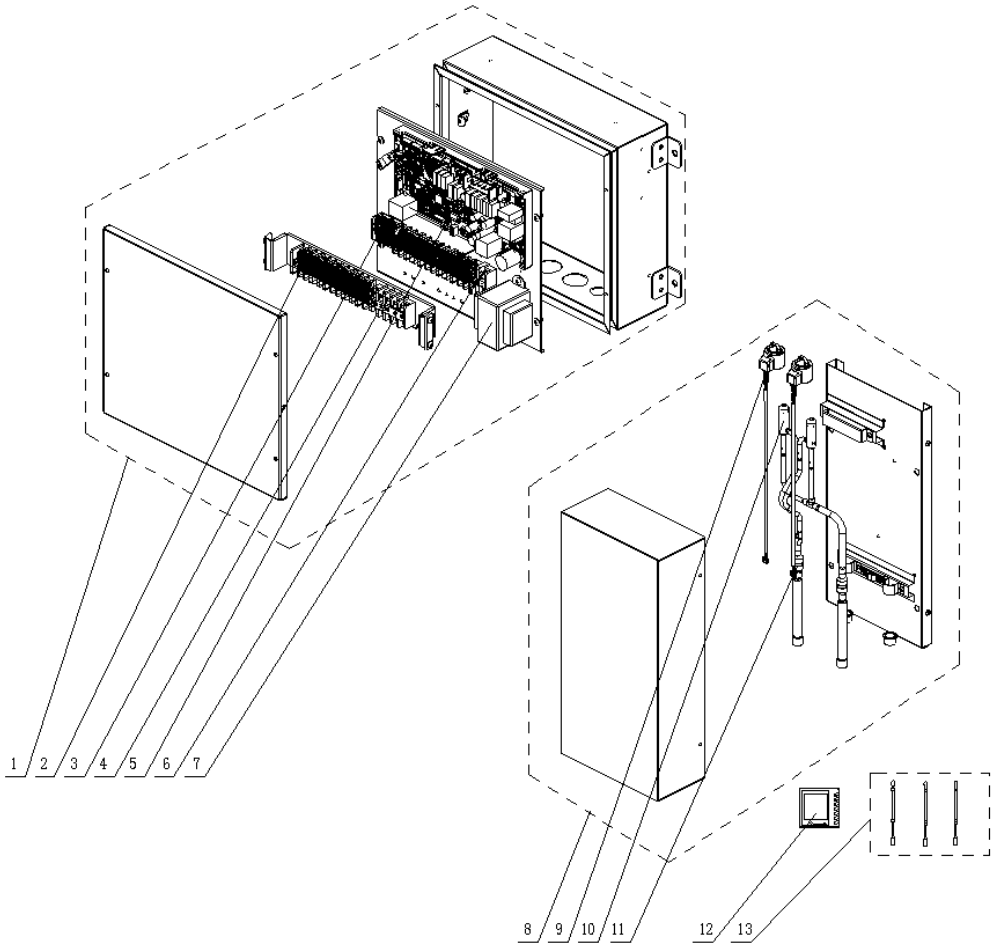

Exploded View of GMV-N192U/C-T(U)

No.	Model	GMV-N192U/C-T(U)	Qty.
	Product Code	CN750N0220	
	Part Name	Part Code	
1	Electric Box Assy	100002070138	1
2	Terminal Board	422000000009	2
3	Terminal Board	42200006000401	1
4	Terminal Board	42200006000901	1
5	Main Board	300002060941	1
6	Terminal Board	42000100000102	1
7	Transformer	450002060013	1
8	Electronic Expansion Valve assy	030174060011	1
9	Electric Expand Valve Fitting	4304413239	2
10	Electronic Expansion Valve	43044100190	2
11	Strainer	0721212101	2
12	Display Board	30296000040	1
13	Sensor Sub-assy	390002060021	1

Above data is subject to change without notice, please refer the SP in global service website.

5.14 1-way Cassette Type Indoor Unit

Exploded View of GMV-ND07TD/A-T(U) / GMV-ND09TD/A-T(U) / GMV-ND12TD/A-T(U)

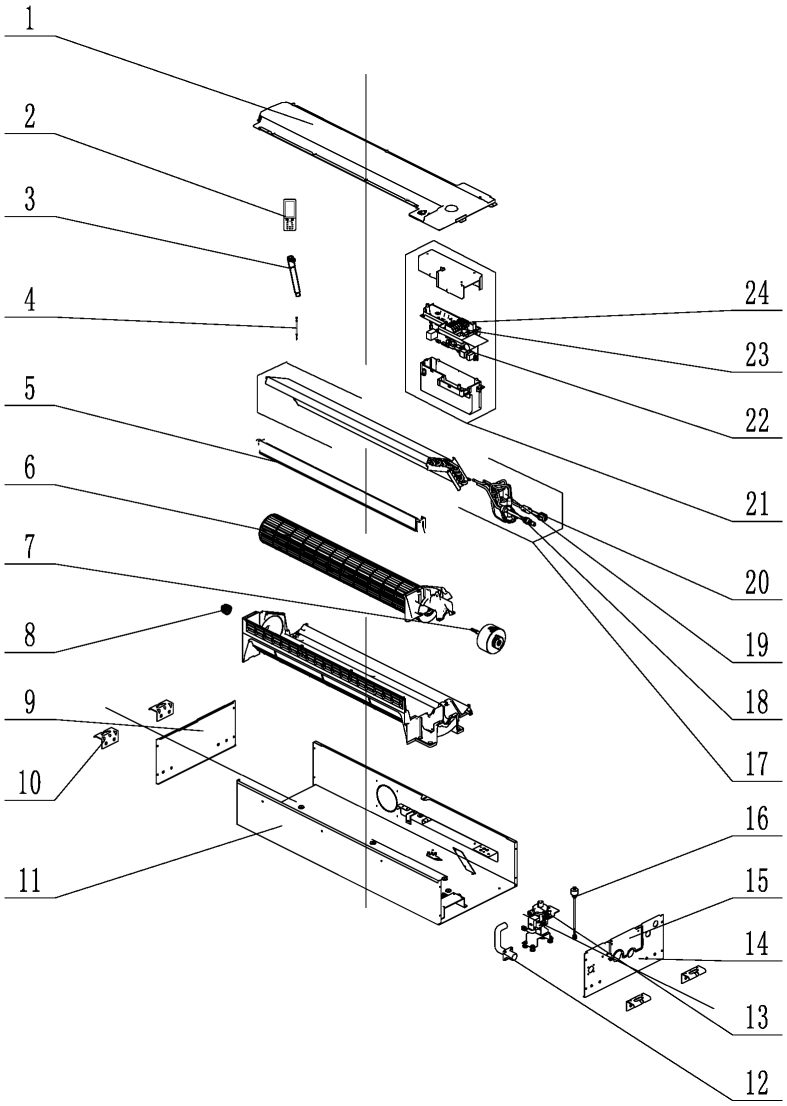

No.	Name of part	For the following unit		For the following unit	
		Unit	Product Code	Unit	Product Code
		GMV-ND07TD/A-T(U)	CM502N0152	GMV-ND09TD/A-T(U)	CM502N0162
		Part code	Quantity	Part code	Quantity
1	Water Tray Sub-Assy	42000100000102	1	42000100000102	1
2	Remote Controller	42200006000401	1	42200006000401	1
3	Drain Hose	30226000029	1	30226000029	1
4	Temperature Sensor	100002074892	1	100002074892	1
5	Helicoid Tongue sub-assy	07213050	1	07213050	1
6	Cross Flow Fan	072009000006	1	072009000006	1
7	Brushless DC Motor	0721200102	1	0721200102	1
8	O-Gasket of Cross Fan Bearing	011001060955	1	011001060955	1
9	Left Side Plate	43002400000501	1	43002400000501	1
10	Hook	01344100020	1	01344100020	1
11	Chassis Assy	0131410001801	1	0131410001801	1
12	Pump Drainpipe	81200706001601	1	81200706001601	1

No.	Name of part	For the following unit		For the following unit	
		Unit	Product Code	Unit	Product Code
		GMV-ND07TD/A-T(U)	CM502N0152	GMV-ND09TD/A-T(U)	CM502N0162
		Part code	Quantity	Part code	Quantity
13	Water Pump	26905288	1	26905288	1
14	Right Side Plate	01194100007	1	01194100007	1
15	Tube Exit Plate Assy	02112466	4	02112466	4
16	Liquid Level Switch	01314100019	1	01314100019	1
17	Evaporator Assy	76512203	1	76512203	1
18	Strainer	1501214301	1	1501214301	1
19	Electronic Expansion Valve	10454100001	1	10454100001	1
20	Strainer	02224100007	1	02224100007	1
21	Electric Box Assy	39008000079G	1	39008000079G	1
22	Main Board	05232046	1	05232046	1
23	Terminal Board	30510589	1	30510589	1
24	Terminal Board	01284100011	1	01284100011	1

Above data is subject to change without notice, please reference the SP in global service website.

No.	Name of part	For the following unit	
		Unit	Product Code
		GMV-ND12TD/A-T(U)	CM502N0182
		Part code	Quantity
1	Water Tray Sub-Assy	42000100000102	1
2	Remote Controller	42200006000401	1
3	Drain Hose	30226000029	1
4	Temperature Sensor	100002074892	1
5	Helicoid Tongue sub-assy	07213050	1
6	Cross Flow Fan	072009000006	1
7	Brushless DC Motor	0721200102	1
8	O-Gasket of Cross Fan Bearing	011001060955	1
9	Left Side Plate	43002400000501	1
10	Hook	01344100020	1
11	Chassis Assy	0131410001801	1
12	Pump Drainpipe	81200706001601	1
13	Water Pump	26905288	1
14	Right Side Plate	01194100007	1
15	Tube Exit Plate Assy	02112466	4
16	Liquid Level Switch	01314100019	1
17	Evaporator Assy	76512203	1
18	Strainer	1501214301	1
19	Electronic Expansion Valve	10454100001	1
20	Strainer	02224100007	1
21	Electric Box Assy	39008000079G	1
22	Main Board	05232046	1
23	Terminal Board	30510589	1
24	Terminal Board	01284100011	1

Above data is subject to change without notice, please reference the SP in global service website.

5.15 General Static Pressure Duct Type Indoor Unit

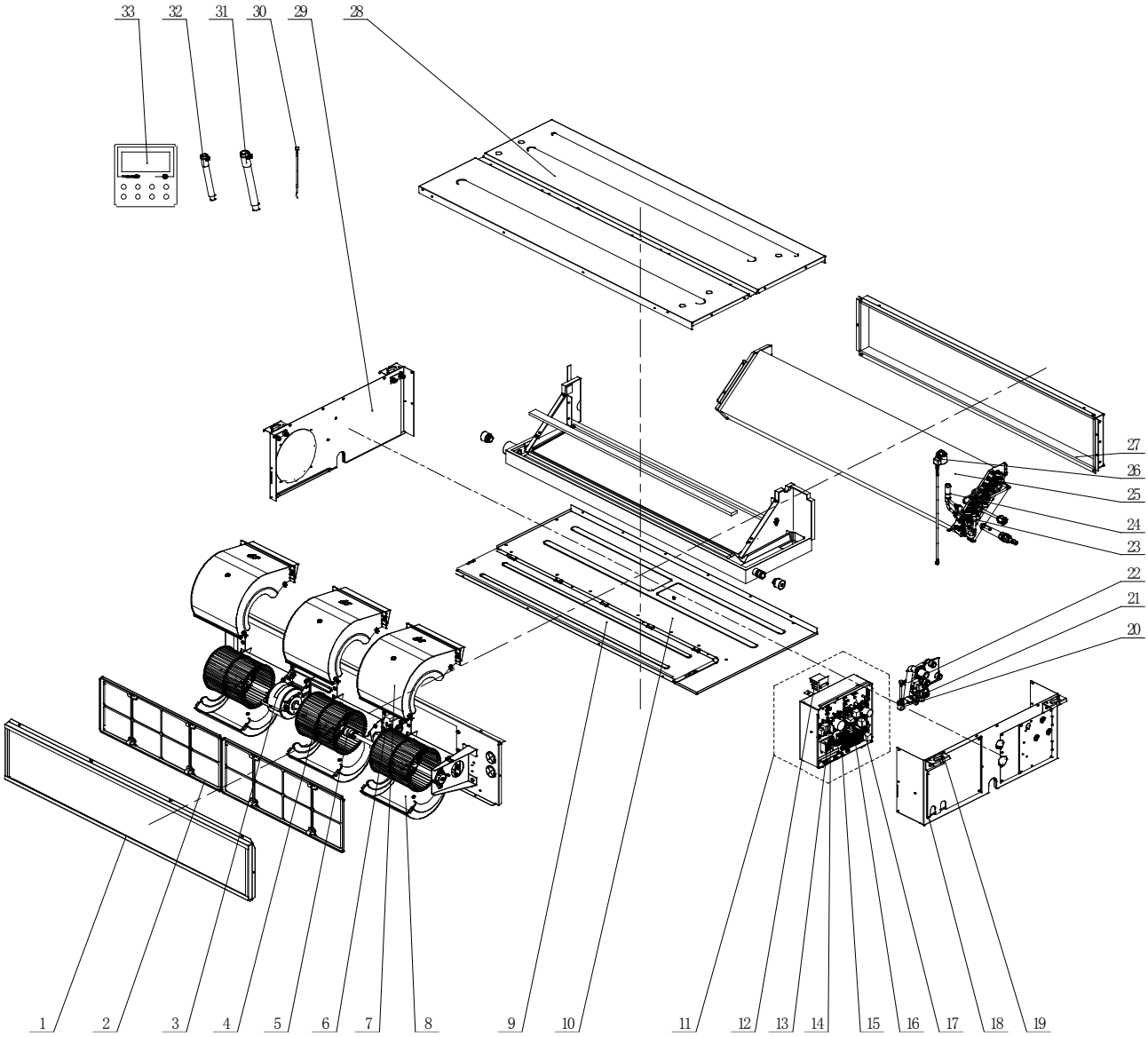

No.	Name of part	For the following unit		For the following unit	
		Unit	Product Code	Unit	Product Code
		GMV-ND30PLS/C-T(U)	CM810N2020	GMV-ND42PLS/C-T(U)	CM810N2000
		GMV-ND36PLS/C-T(U)	CM810N2010	GMV-ND48PLS/C-T(U)	CM810N1990
		Part code	Quantity	Part code	Quantity
1	Filter Sub-Assy	11725206	2	11725206	2
2	Air Intake Side Board Sub-Assy	02225261	1	02225261	1
3	Brushless DC Motor	150104060015	1	150104060015	1
4	Centrifugal Fan	103003060003	3	103003060003	3
5	Joint Slack	73018731	1	73018731	1
6	Inductance	4312800001403	1	4312800001403	1
7	Volute Casing	200230060004	3	200230060004	3
8	Volute Casing	200230060003	3	200230060003	3
9	Cover Of Air-In	01265344	1	01265344	1
10	Bottom Cover Plate	01265343	1	01265343	1

No.	Name of part	For the following unit		For the following unit	
		Unit	Product Code	Unit	Product Code
		GMV-ND30PLS/C-T(U)	CM810N2020	GMV-ND42PLS/C-T(U)	CM810N2000
		GMV-ND36PLS/C-T(U)	CM810N2010	GMV-ND48PLS/C-T(U)	CM810N1990
		Part code	Quantity	Part code	Quantity
11	Electric Box Assy	100002068420	1	100002068420	1
12	Radiator	430034060043	1	430034060043	1
13	Filter Board	300020060016	1	300020060016	1
14	Terminal Board	4201110602	1	4201110602	1
15	Terminal Board	42200006000401	1	42200006000401	1
16	Main Board	300002060459	1	300002060459	1
17	Main Board	300002060399	1	300002060399	1
18	Right Side Plate Assy	01315298	1	01315298	1
19	Hook	02112466	4	02112466	4
20	Water Pump	81200706001601	1	81200706001601	1
21	Water Level Switch	43002400000502	1	43002400000502	1
22	Pump Drainpipe	04615487	1	04615487	1
23	Strainer	0721304401	2	0721304401	2
24	Electronic Expansion Valve	07334468	1	07334468	1
25	Evaporator Assy	011001060443	1	011001060443	1
26	Electric Expand Valve Fitting	4304413215	1	4304413215	1
27	Air Outlet Side Board Assy	02225270	1	02225270	1
28	Top Cover Board Assy	0126534901	1	0126534901	1
29	Left Side Plate Assy	01315299	1	01315299	1
30	Sensor Sub-Assy	39004169G	1	39004169G	1
31	Drain Hose Sub-Assy	05232050	1	05232050	1
32	Corrugated Pipe	05015408	1	05015408	1
33	Display Board	30296000040	1	30296000040	1

Above data is subject to change without notice, please reference the SP in global service website.

5.16 360°Air Discharge Compact Casssette Type Indoor Unit

Exploded View of GMV-ND05T/E-T(U) / GMV-ND07T/E-T(U) / GMV-ND09T/E-T(U) / GMV-ND12T/E-T(U) / GMV-ND15T/E-T(U) / GMV-ND18T/E-T(U)

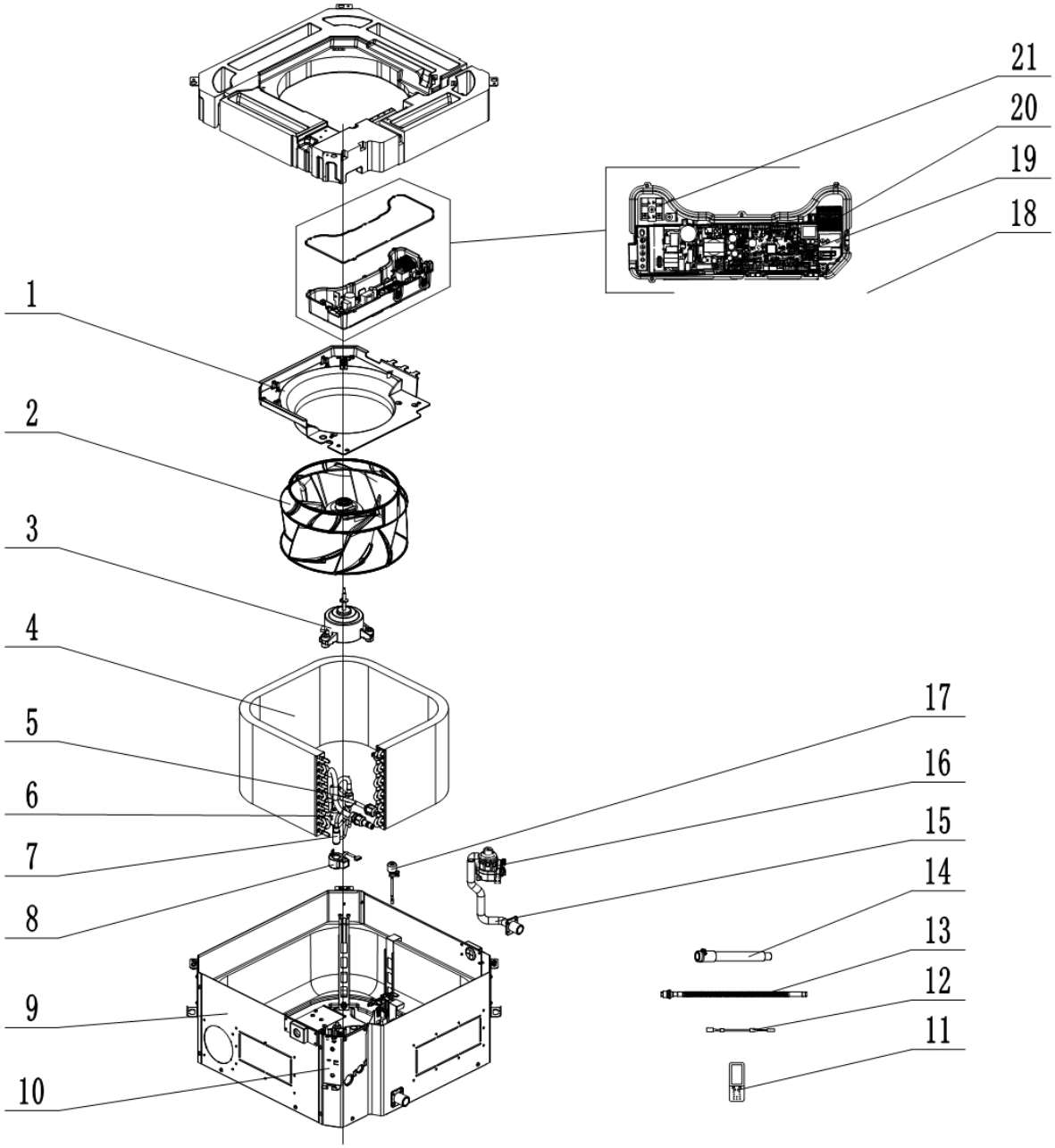

No.	Name of part	For the following unit	
		Unit	Product Code
		GMV-ND05T/E-T(U)	CM500N1600
		GMV-ND07T/E-T(U)	CM500N1590
		GMV-ND09T/E-T(U)	CM500N1620
		GMV-ND12T/E-T(U)	CM500N1580
		GMV-ND15T/E-T(U)	CM500N1610
		GMV-ND18T/E-T(U)	CM500N1570
		Part code	Quantity
1	Flow Guide Loop	200150060003	1
2	Centifugal Fan	103003060008	1
3	Brushless DC Motor	150104060012	1
4	Evaporator Assy	011001060373	1
5	Strainer	07213032	1
6	Strainer	07216221	1
7	Electronic Expansion Valve	072009000006	1
8	Electric Expand Valve Fitting	43040001	1
9	Shell Assy	011633060005	1
10	Mounting Rack Sub-Assy	017044060011	4
11	Remote Controller	30510589	1
12	Sensor Sub-Assy	39008000115G	1
13	Corrugated Pipe	05015408	1
14	Drain Hose Sub-Assy	007008000001	1
15	Drain Pipe	200070060005	1
16	Water Pump	430024000005	1
17	Liquid Level Switch	4313800005802	1
18	Electric Box Assy	100002068378	1
19	Main Board	300002000782	1
20	Terminal Board	42200006000401	1
21	Terminal Board	4201110602	1

Above data is subject to change without notice, please reference the SP in global service website.

5.17 360°Air Discharge Casssette Type Indoor Unit

Exploded View of GMV-ND07T/C-T(U) / GMV-ND09T/C-T(U) / GMV-ND12T/C-T(U) / GMV-ND15T/C-T(U) / GMV-ND18T/C-T(U) / GMV-ND22T/C-T(U) / GMV-ND24T/C-T(U) / GMV-ND30T/C-T(U) GMV-ND36T/C-T(U) / GMV-ND42T/C-T(U) / GMV-ND48T/C-T(U)

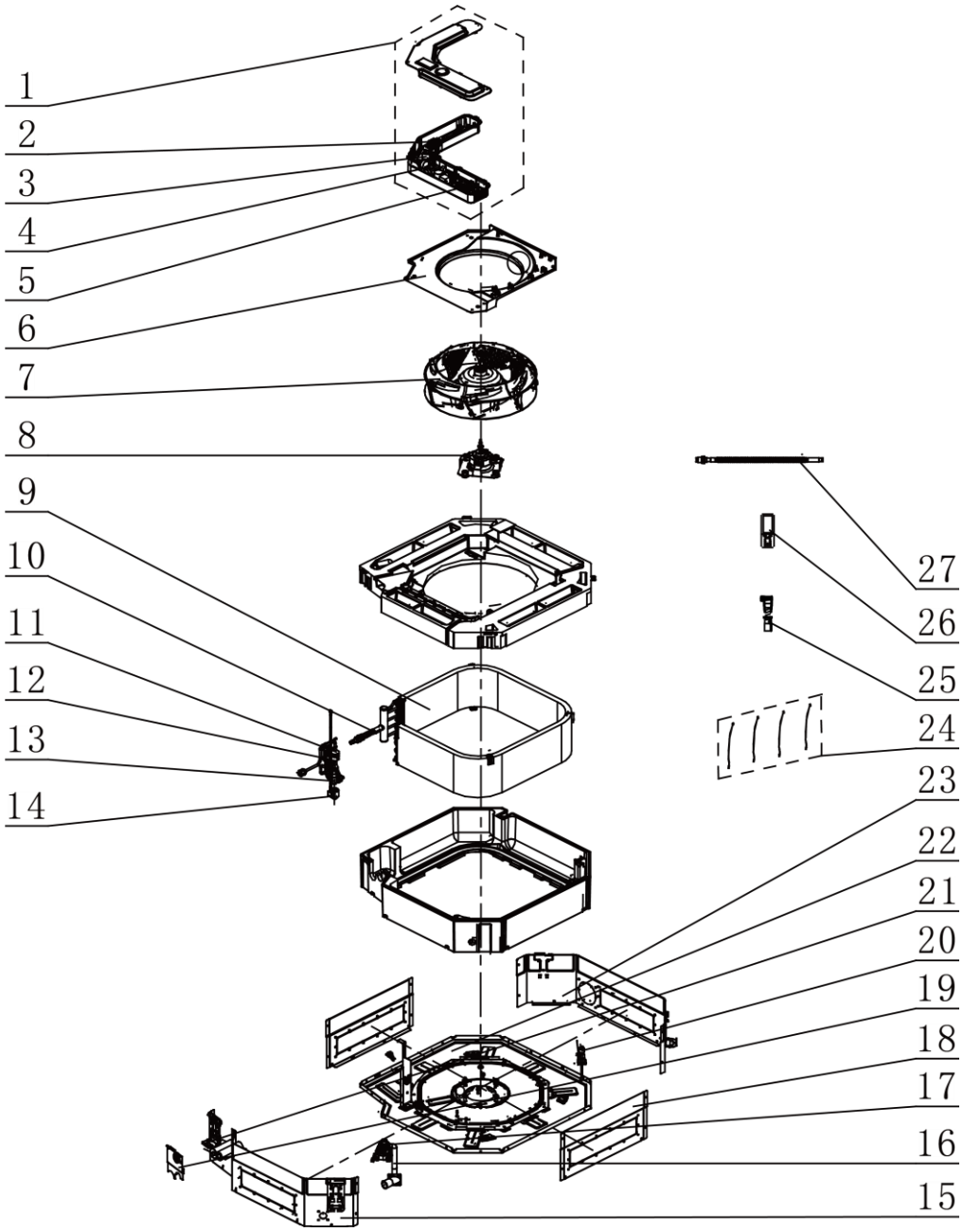

No.	Name of part	For the following unit	
		Unit	Product Code
		GMV-ND07T/C-T(U)	CM500N1560
		GMV-ND09T/C-T(U)	CM500N1480
		GMV-ND12T/C-T(U)	CM500N1530
		GMV-ND15T/C-T(U)	CM500N1460
		GMV-ND18T/C-T(U)	CM500N1470
		GMV-ND22T/C-T(U)	CM500N1520
		GMV-ND24T/C-T(U)	CM500N1490
		Part code	Quantity
1	Electric Box Assy	100002068346	1
2	Terminal Board	42200006000401	1
3	Terminal Board	4201110602	1
4	Filter Board	30221000021	1
5	Main Board	300002060274	1
6	Diversion Circle	26909400067	1
7	Centrifugal Fan	10429400004	1
8	Brushless DC Motor	1570410000702	1
9	Evaporator Assy	011001000236	1
10	Corrugated Pipe	035030000007	4
11	Strainer	07415210	1
12	Strainer	07213050	1
13	Electronic Expansion Valve	07334466	1
14	Electric Expand Valve Fitting	4304413252	1
15	Side Plate 2	01319400050	1
16	Drainage Pipe Sub-Assy	26909400055	1
17	Water Pump	43138000058	1
18	Side Plate 3	01319400051	2
19	Seal Plate	0149940000202	1
20	Liquid Level Switch	4502021601	1
21	Body Installing Plate	01332701	4
22	Seat Board Sub-Assy	02229400011	1
23	Side Plate 1	01319400049	1
24	Sensor Sub-Assy	390002000032	1
25	Drain Hose	05232044	1
26	Remote Controller	30510589	1
27	Corrugated Pipe	05015408	1

Above data is subject to change without notice, please refer the SP in global service website.

No.	Name of part	For the following unit	
		Unit	Product Code
		GMV-ND30T/C-T(U)	CM500N1550
		GMV-ND36T/C-T(U)	CM500N1500
		GMV-ND42T/C-T(U)	CM500N1450
		GMV-ND48T/C-T(U)	CM500N1540
		Part code	Quantity
1	Electric Box Assy	100002068346	1
2	Terminal Board	42200006000401	1
3	Terminal Board	4201110602	1
4	Filter Board	30221000021	1
5	Main Board	300002060274	1
6	Diversion Circle	10479400002	1
7	Centrifugal Fan	10429400003	1
8	Brushless DC Motor	15709400009	1
9	Evaporator Assy	011001000405	1
10	Corrugated Pipe	035030000007	4
11	Strainer	07415210	1
12	Strainer	07213050	1
13	Electronic Expansion Valve	07334468	1
14	Electric Expand Valve Fitting	4304413252	1
15	Side Plate 2	01319400026	1
16	Drainage Pipe Sub-Assy	26909400055	1
17	Water Pump	43138000058	1
18	Side Plate 3	01319400036	2
19	Seal Plate	0149940000202	1
20	Liquid Level Switch	4502021601	1
21	Body Installing Plate	01332701	4
22	Seat Board Sub-Assy	02229400011	1
23	Side Plate 1	01319400025	1
24	Sensor Sub-Assy	390002000032	1
25	Drain Hose	05232044	1
26	Remote Controller	30510589	1
27	Corrugated Pipe	05015408	1

Above data is subject to change without notice, please refer the SP in global service website.

GMV-ND54T/C-T(U)

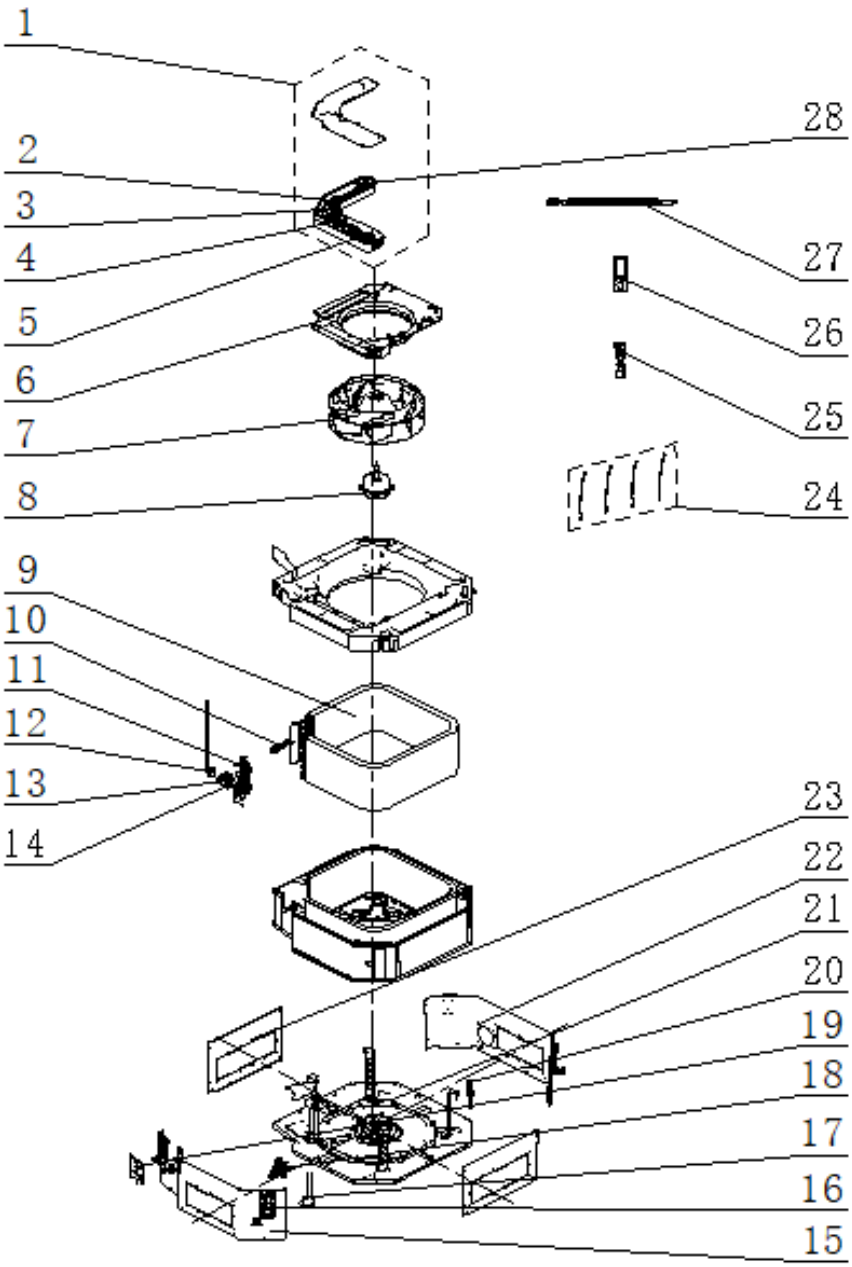

No.	Name of part	For the following unit	
		Unit	Product Code
		GMV-ND54T/C-T(U)	CM500N1870
		Part code	Quantity
1	Electric Box Assy	100002074618	1
2	Terminal Board	42200006005404	1
3	Terminal Board	4201110602	1
4	Filter Board	300020060076	1
5	Main Board	300002060274	1
6	Diversion Circle	10479400002	1
7	Centrifugal Fan	10429400003	1
8	Brushless DC Motor	15709400009	1
9	Evaporator Sub-Assy	01059400009	1
10	Corrugated Pipe	0502511203	1

No.	Name of part	For the following unit	
		Unit	Product Code
		GMV-ND54T/C-T(U)	CM500N1870
		Part code	Quantity
11	Strainer	07415210	1
12	Electric Expand Valve Fitting	4304413252	1
13	Strainer	07213050	1
14	Electronic Expansion Valve	072009060045	1
15	Side Plate 2	01319400026	1
16	Body Installing Plate	01332701	4
17	Drainage Pipe Sub-assy	26909400055	1
18	Water Pump	43138000058	1
19	Seal plate	0149940000202	1
20	Liquid Level Switch	4502021601	1
21	Seat Board Sub-Assy	02229400011	1
22	Side Plate 1	01319400025	1
23	Side Plate 3	01319400036	2
24	Sensor Sub-assy	390002000032	1
25	Drain Hose	05232044	1
26	Remote Controller	30510589	1
27	Corrugated Pipe	035030000005	1
28	Filter Board	30221000021	1

GREE ELECTRIC APPLIANCES, INC. OF ZHUHAI 519070

Add: West Jinji Rd,Qianshan Zhuhai,Guangdong,China
Tel: (+86-756)8522218
Fax: (+86-756)8669426
E-mail: global@cn.gree.com www.gree.com

JF00302921